YS480S

OPERATION MANUAL

S SERIES®

YODER SMOKERS


S SERIES®
YODER SMOKERS

CONTENTS

Dangers, Warnings & Cautions....6

Burning-in Your New Grill....8

ACS Controller Overview....10

Cooking Styles & Set-ups....14

Pre-Grill Checklist....16

Operating the Grill....18

Fireboard App....20

Routine Maintenance....34

Troubleshooting Bluetooth Connection....36

Troubleshooting WiFi Connection....37

Troubleshooting Ignition....38

Manually Igniting the Grill....39

FAQ's....40

Troubleshooting....41

Diagnostics....42

Temperature Test....44

ACS Controller Temperature Offset....46

Index of Grill Components....55

Warranty....66

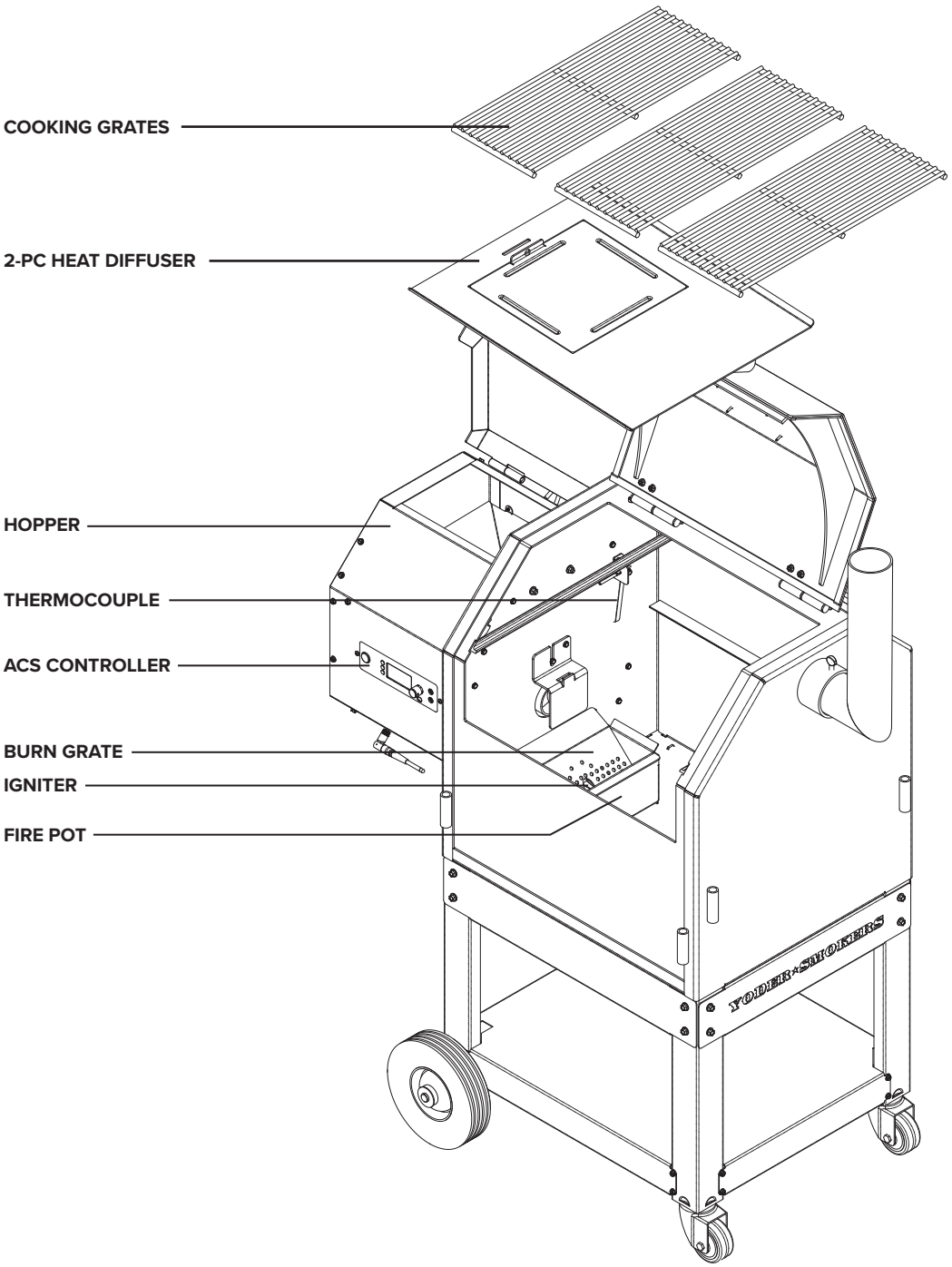
COOKING GRATES
2-PC HEAT DIFFUSER
HOPPER
THERMOCOUPLE
ACS CONTROLLER
BURN GRATE
IGNITER
FIRE POT
YODER SMOKERS

PLEASE READ THIS ENTIRE MANUAL BEFORE USING YOUR NEW YODER SMOKERS S-SERIES PELLET GRILL.

Failure to follow the instructions in this manual could result in property damage, bodily injury, or even death. Contact your local fire officials about restrictions and installation inspection requirements in your area if you have questions on the positioning of your grill. As with any grill, gases such as carbon monoxide are formed. Harmful in concentrated quantities, carbon monoxide can lead to death. ONLY USE THIS GRILL in an outdoor, open-air environment where the carbon monoxide can naturally dissipate and not harm you.

WARNING!

Safety guidelines to prevent this colorless, odorless gas from poisoning you, your family, your pets, or others:

- Know the symptoms of carbon monoxide poisoning: headache, dizziness, weakness, nausea, vomiting, sleepiness, and confusion. Carbon monoxide reduces the blood's ability to carry oxygen. Low blood oxygen levels can result in loss of consciousness and death.
- See a doctor if you or others develop any cold or flu-like symptoms. Carbon monoxide poisoning, which can easily be mistaken for a cold or flu, is often detected too late.
- Alcohol consumption and drug use increase the effects of carbon monoxide poisoning.
- Carbon monoxide is especially toxic to mother and child during pregnancy, infants, the elderly, smokers, and people with blood or circulatory system problems, such as anemia or heart disease.
- Only use your grill outdoors on a safe, noncombustible surface and distanced from any flammable materials or liquids.
- Do not use gasoline, charcoal lighter fluid, or flammable liquids to ignite or maintain the fire in the grill. Keep all such liquids well away from this appliance when in use.

DANGER!

FOR USERS IN NORTH AMERICA:

- An electrical supply with GFCI protection is required. To prevent and protect against any shock hazard, locate a safely grounded 3-prong GFCI receptacle in reach of the power cord.
- Outdoor extension cords can be used if they are surface marked with the suffix letter "W" and with a tag stating "Suitable for use with outdoor appliances".

FOR USERS OUTSIDE NORTH AMERICA:

- Plug into an appropriate earthed outlet.
- Do not remove earth prong or modify plug in.
- Do not use an adapter or extension cord.

DANGER!

FOR ALL PRODUCT USERS:

- Hazardous voltage is present, which can shock, burn, or cause death. Disconnect the power cord before servicing the grill unless otherwise noted in this Owner's Manual.
- Never store flammable liquids near the grill.
- Never use gasoline or lighter fluid to manually light your grill.
- Never use your grill in the rain or around any source of water.
- Do not use the grill for anything other than its intended use.
- Should a grease fire occur, push the power button and immediately unplug the grill to stop the fans. Shut the lid until the fire is out.

WARNING!

Burn Hazard:

Many parts of the grill will become intensely hot during operation. Please use caution to avoid burns both during operation and afterwards while the grill is still hot.

• **Never** leave the grill unattended with young children present.

• **Never** move the grill during operation.

• **Always** allow the grill to cool before moving.

WARNING!

Fire Hazard:

• When operating this grill, maintain a **MINIMUM** distance of 18 inches (46 cm) between the grill and any walls or combustible surfaces. See diagram below.

• When operating the grill under overhead combustibles or covered patios, a **MINIMUM** of 40 inches (102 cm) is required.

• The smoker must be level front to back, but it is not required to be level from left to right as long as the drip bucket end of the cooker is the lowest point — otherwise problems with grease running towards the burn pot could result in a grease fire.

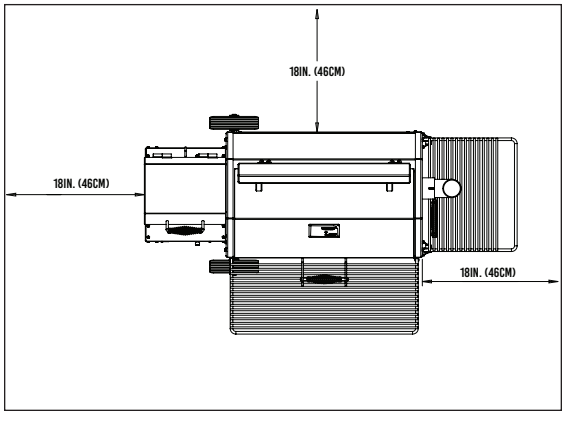

WARNING!

Air Contaminant Hazard:

• Assemble and operate this grill **ONLY** per the instructions in the Assembly Guide and the Owner's Manual.

• The grill is intended for outdoor use only.

• Never use heating fuel pellets in the grill, due to potential hazardous contaminants and additives that may be present.

CAUTION!

Best Practices:

• Always store pellets in dry location. Pellets exposed to moisture will not burn properly and affect the proper operation of the grill. If wet pellets are left in the hopper, they lock up the auger.

• Keep the grill clean per this manual.

• Do not modify or use accessories not specified for use with this grill.

• If your previous cooks have produced large quantities of flammable grease, it is highly recommended that the grease be cleaned from the grill before cooking on it again.

• Keep the grill unplugged while not in use.

• After a period of non-use, the hopper, auger, and firepot must be inspected for obstruction.

PROPOSITION 65 STATEMENT

WARNING: Combustion byproducts near this cooker include carbon monoxide, a chemical known to the State of California to cause birth defects or other reproductive harm.

BURNING-IN THE GRILL

01. COOKING CHAMBER

Install the burn grate inside the firebox **(FIG 1)** making sure it rests securely against the back wall with the igniter tube passing through the grate. Next, install the heat diffuser plate **(FIG 2)** into the cook chamber. Finally, secure the smokestack **(FIG 3)** with the thumb screw.

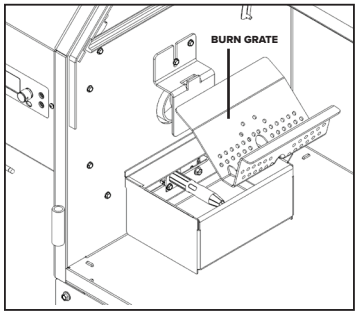

FIG 1

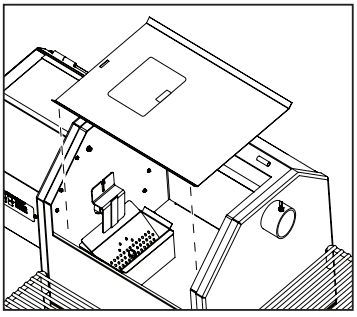

FIG 2

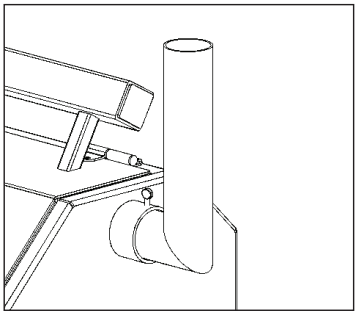

FIG 3

02. GRATES & SHELVES

Place the cooking grates inside the cooking chamber **(FIG 4)**, then slide the second (upper) cooking shelf into place **(FIG 5)**. The welded brackets on the second cooking shelf should slide onto the rail first. Next, attach the exterior front and side shelves onto the cooker **(FIG 6)**.

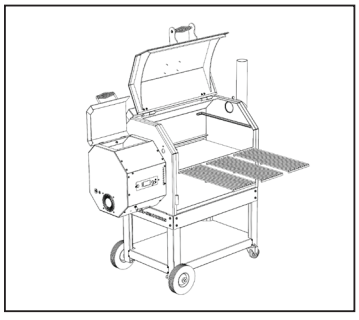

FIG 4

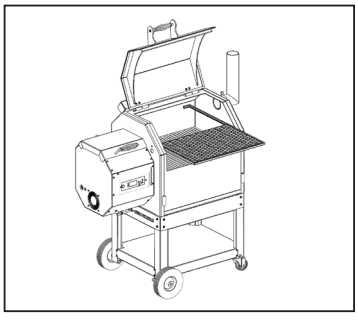

FIG 5

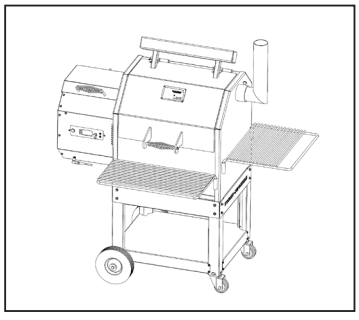

FIG 6

03. POSITIONING THE GRILL

Using the side shelf to assist in moving, position the cooker a minimum of 18 inches away from walls, deck rails, or any other combustible surface. Ensure the cooker is level from front to back. **However, the cooker does not have to be perfectly level from left to right as long as the end with the drip bucket (opposite the hopper) is the lowest point** — otherwise problems with grease running towards the burn pot could result in a grease fire.

BURNING-IN THE GRILL (CONT.)

04. PELLETS & POWER

Before cooking for the first time, "burn-in" the grill to rid it of any foreign matter. First, fill the hopper **(FIG 7)** with pellets, and put a handful of pellets into the burn grate **(FIG 1).** Next, connect the power cord between the receptacle on the back of the hopper **(FIG 8)** and a GFCI-protected wall outlet **(FIG 9)**. Then close both lids.

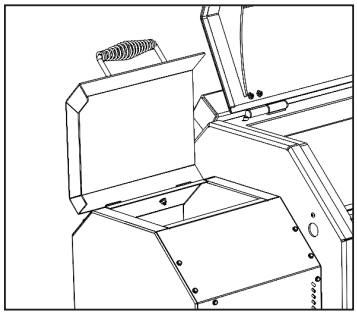

FIG 7

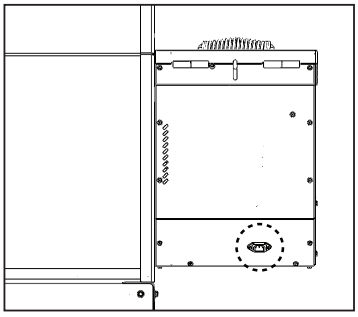

FIG 8

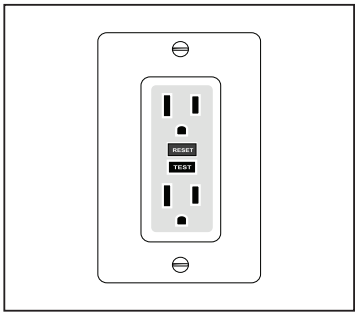

FIG 9

05. THE "BURN-IN"

Press the Power button **(FIG 10)** to initiate the startup. Once the display shows the menu, press the small black button next to "Start" **(FIG 11)** to initiate the pellet auger feed system. When the display reads 350°F **(FIG 12)**, open the lid and coat the grates with vegetable oil. Close the lid and allow the grill to "burn-in" for 45 minutes.

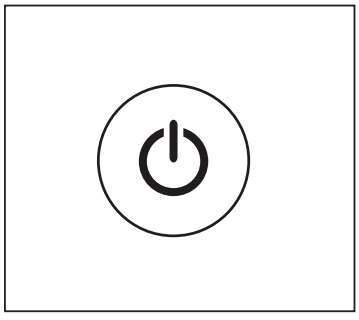

FIG 10

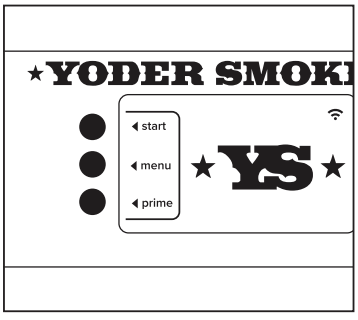

FIG 11

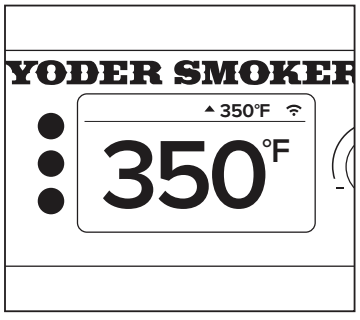

FIG 12

06. SHUTDOWN

After 45 minutes at 350°F, press the Power button to begin the shutdown process. The display will flash "SHUTDOWN" and the fans will continue to run until the fire is burned clean. Once the process is complete, the fan and display will turn off. Finally, after the cooking grates have cooled completely, wipe them down with cotton towel to ensure any remaining foreign matter is removed. **NOW IT'S READY AND SAFE TO COOK!**

ACS CONTROLLER LAYOUT

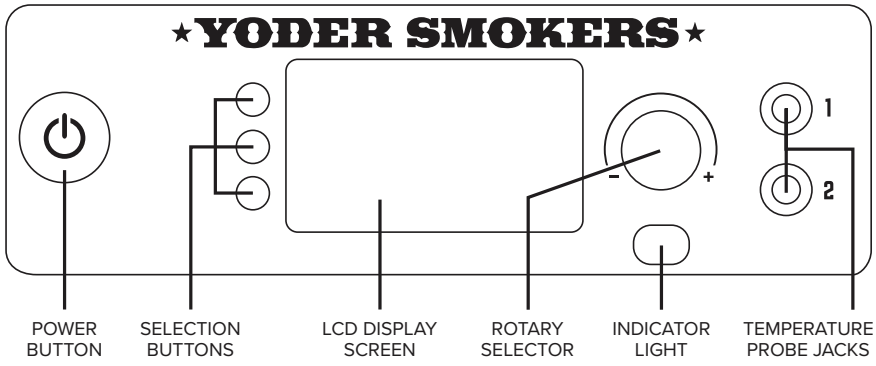

POWER BUTTON – Powers the grill on and off.

SELECTION BUTTONS – These buttons are used to make selections throughout the menu.

LCD DISPLAY SCREEN – Displays all content.

ROTARY SELECTOR – Allows you to navigate the menu by rotating the knob and also allows you to make selections or switch between options by pressing in on the knob.

INDICATOR LIGHT – Lit when power to the unit is on, and when the cooker is in shutdown mode.

TEMPERATURE PROBE JACKS – Plug in your temperature probes to be able to view food temperature on the display screen and on your mobile device via the app.

START-UP DISPLAY

START – Press to initiate cooking functions

MENU – Press to access programs and settings

PRIME – Press to manually operate the auger

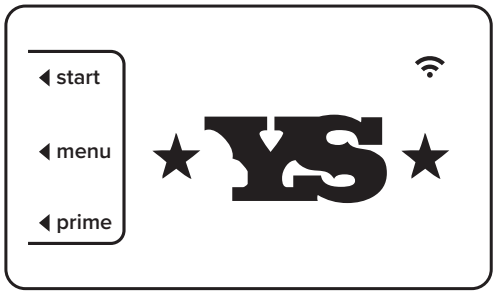

HOME SCREEN DISPLAY

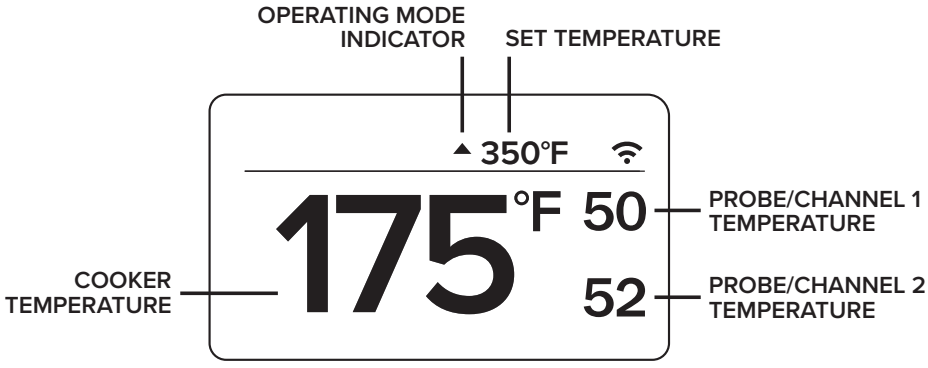

TEMPERATURE – Displays the current temperature of the cooker at the center of the main cooking surface. Upon startup, the display will flash "HEAT UP" until the internal temperature of the unit reaches 125°F. At that point, the controller will display the temperature of the main cooking surface.

OPERATING MODE INDICATOR – Indicates the current mode the cooker is operating in.

▲ ***Heat-Up Mode*** – An upward pointing, blinking arrow indicates the cooker is increasing the temperature.

◆ ***Maintenance Mode*** – A diamond indicates the cooker is in maintenance mode and is operating to maintain the set temperature.

▼ ***Cool Down Mode*** – A downward pointing, blinking arrow indicates the cooker is decreasing the temperature.

SET TEMPERATURE – Displays the selected set temperature. To adjust the temperature set point, turn the dial on the rotary selector knob clockwise to increase it or counter-clockwise to decrease it. The rotary selector adjusts in 5° increments. You can press in on the rotary selector to switch to 25° increments.

PROBE CHANNELS – Display the temperature reading(s) from the probes when inserted into the appropriate jack. If no probes are connected, the screen will not display temperature in this area.

SELECTION MENU DISPLAY

This menu allows access to options that are available during a cook. To access the menu, press any of the three selection buttons while at the home view screen. The menu will appear and allow for a selection to be made for three seconds before returning to the home view. The currently selected view will appear at the top of the screen. The “Pit & Probes” view is the default display option, however there are five total display options of which can be chosen by pressing the **VIEW** selection button on the control panel.



PIT & PROBES



PIT

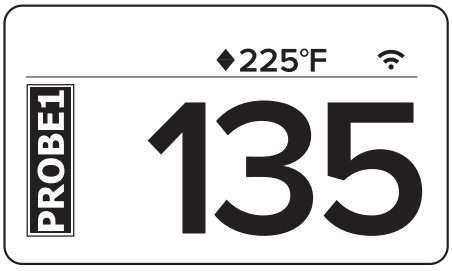

PROBE 1



PROBE 2

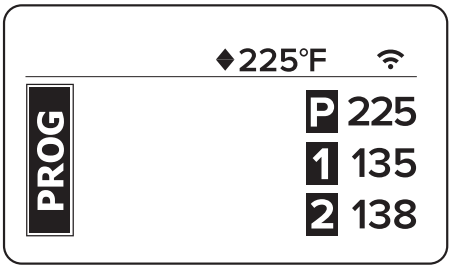

PROGRAM

MAIN MENU DISPLAY

The main menu is accessible in either the start-up menu or in the in-cook selection menu. This menu allows the user to access their different programs, settings, and general information about their cooker. Navigate the available selections in the main menu by using the rotary selector knob. You can turn the knob clockwise or counter-clockwise to change your selection and press inward on the knob to make a selection.

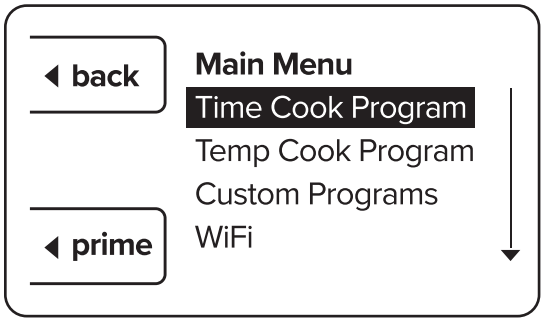

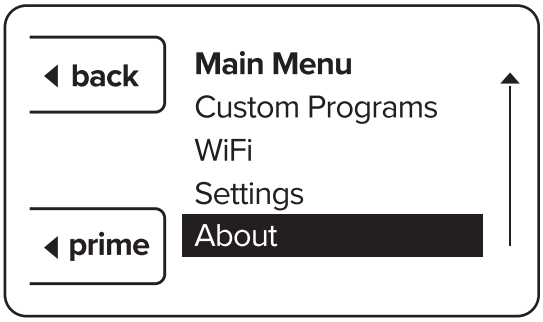

TIME COOK PROGRAM – The time cook function is used to run the cooker for a set amount of time at a specified temperature.

TEMP COOK PROGRAM – The temp cook program is used to run the cooker at a specified temperature until either Probe 1 or Probe 2 (user specified) hits the desired temperature.

CUSTOM PROGRAMS – The custom program feature allows the user to create and save a program with as many as nine steps for the cook to follow. This function is beneficial when there is a specific method you follow when cooking a certain type of meat or a particular recipe.

WIFI – Displays the current WiFi connection settings.

SETTINGS – Allows access to additional settings, such as temperature selection between Fahrenheit & Celsius or calibration of the thermocouple while the cooker is running. There is a test function that can be initiated before starting the cooker. The test function allows each mechanical component of the hopper assembly to be tested.

ABOUT – Displays the current controller program information.

TIMES, TEMPS, AND HELPFUL TIPS

YOU SHOULD KNOW...

When the cooker is set up traditionally (diffuser plate installed), the heat up time is 20 to 30 minutes. When the cooker is set up for direct grilling (diffuser plate out), the heat up time is about 15 minutes.

It is also important to note that when the cooker is set up “direct”, the temperature at the center of the grate is hotter than the reported temperature. How much hotter depends on the set point. At 350°F on the display, the grate center is approximately 425°F. At 475°F on the display, grate center is approximately 625°F. The difference is caused by the reduction of airflow to the thermocouple when the direct grates are installed. This is true with the diffuser in or out.

Finally, precise temperature management is not important when you are direct or indirect grilling and are opening the grill frequently. Simply find a set temperature that works well for the type of food you are grilling. For instance, burgers or brats do well at a 350° F set point when indirect grilling.



THE VERSATILITY OF YOUR GRILL IN

4 UNIQUE COOKING SETUPS

SMOKING

Temps from 175 to 275°F with diffuser plate installed, with access door in place, and standard round bar cooking grates in place.

BAKING

Temps from 350 to 400°F with diffuser plate installed, with access door in place, and standard round bar cooking grates in place.

DIRECT GRILLING

Temps from 350 to 600°F using optional GrillGrate® cooking grates for direct grilling with searing capability. In this setup, remove the heat diffuser plate, and install the optional GrillGrate® cooking grates on the left side of the cooker. The optional GrillGrate® Grilling Kit consists of three custom-made aluminum panels which replace two standard cooking grates. **(See diagram below)**

INDIRECT GRILLING

Temps from 275 to 350°F for moderate temperature grilling such as wings or chicken breasts. In this setup, keep the heat diffuser plate and the heat diffuser access door in place, then install the optional GrillGrate® cooking grates on the left side of the cooker. **(See diagram below)**

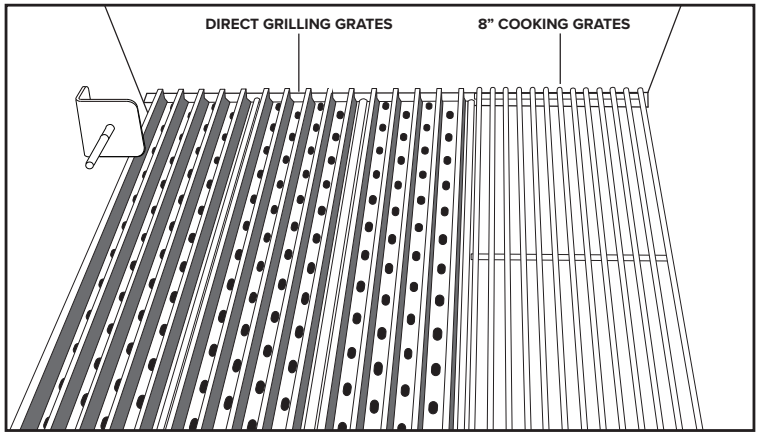

YODER SMOKERS RECOMMENDED

PRE-GRILL CHECKLIST

1. Open the cooking chamber door and remove the cooking grates.

2. Remove the access door from the heat diffuser plate. **(FIG 13)**

3. Remove the burn grate from the firebox **(FIG 14)**. Inspect and clean thoroughly. Make certain that the combustion holes in the burn grate and the igniter tube in the firebox are free of debris or ash build up. Visually inspect the air way between the combustion fan and the firebox to be certain that it is free and clear of ash and debris (a shop vacuum works well for ash and debris removal).

4. While inspecting the firebox assembly, confirm that the igniter assembly, tube and igniter rod are free of ash or other debris. Periodically inspect the igniter tube to ensure it is tightly secured by grabbing the tube and turning it clockwise.

5. Reinstall the burn grate **(FIG 15)**. Begin by resting the right hand side of the burn grate on the fire box and then pressing down on the left hand side of the burn grate until fully seated. When the burn grate is properly seated it rests firmly on the right hand side of the firebox and fits close to the hopper wall. Finally, ensure the igniter assembly is centered in the respective hole in the burn grate.

6. Reinstall the access door.

7. Reinstall the cooking grates and second shelf.

8. Remove, inspect, and clean the grease bucket as needed.

9. Open the hopper lid and inspect for any foreign materials, as well as inspect the condition of pellets left over from previous cooks to ensure they've not been damaged by humidity.

YOU SHOULD KNOW

If you've been smoking cuts of meat with higher fat content or larger quantities of meat or pork, you will want to remove the entire heat diffuser plate and inspect the bottom of the cooking chamber for grease build up. Excess grease in the grill can cause a fire that can be dangerous and difficult to extinguish. To remove build up of grease in the cooking chamber, use a plastic putty knife to scrape it up and discard. Take extra care along the seams of the chamber so as to not damage the silicon seal.

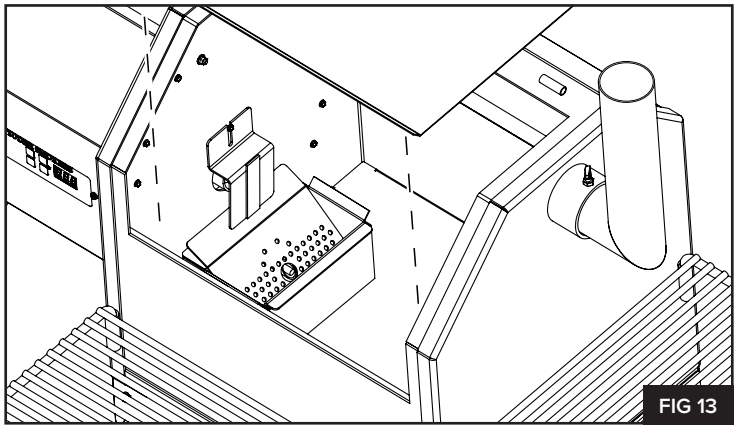

FIG 13

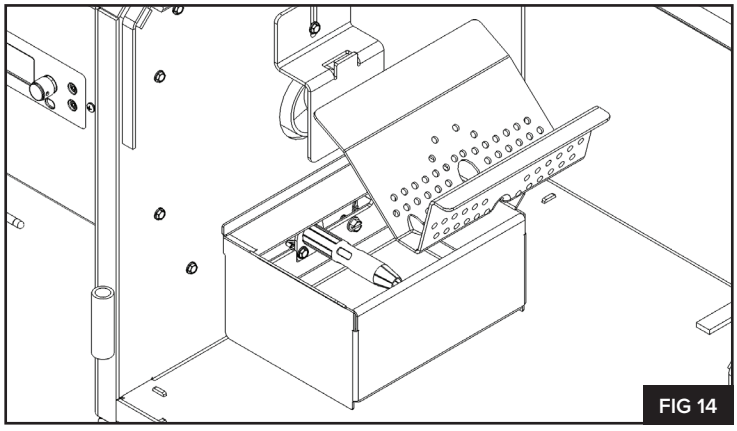

FIG 14

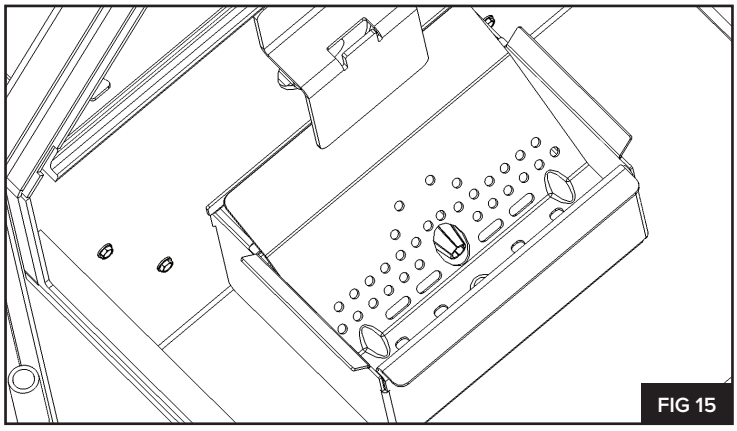

FIG 15

RECOMMENDED PROCEDURE FOR

OPERATING THE GRILL

START-UP PROCEDURE

1. Plug the female end of the power cord into the receptacle on the pellet hopper. Next, plug the male end into a 120 volt, 15 amp GFCI-protected outlet. If an extension cord is required, see caution notes on page 6 of this manual.

2. Load the hopper with food grade pellets. **DO NOT** use heating grade pellets.

3. Push the power button. This starts the combustion air fan and illuminates the LED power light.

4. Press the START button on the control panel to activate the auger feed system. This will prime the burn grate with pellets for the fire. At 30 seconds, the igniter is powered on; within 2 minutes, the heat from the igniter and the combustion air from the fans will have a small smoldering fire started.

5. Set your desired cooking temperature by adjusting the rotary selector knob. If you do not adjust the temperature, it will automatically heat to the default temperature set point of 350°F. The temperature can be adjusted at any time during the cook.

6. Once the temperature reaches the set point, typically 30 minutes, place your food on the grates.

YOU SHOULD KNOW

Once the start cycle has been activated, an "up arrow" will appear on the display panel next to the set temperature indicating "heat up" mode. Once the grate temperature reaches 110°F, the actual grate temperature will then be displayed. When the target temperature range is attained, a diamond will be displayed next to the set temp to indicate "Maintenance Mode".

SHUTDOWN PROCEDURE

1. When finished cooking, push the power button. The screen will begin flashing "Powering Off".

2. Allow the combustion cooling fan to continue running until the fire is burned clean. The fan will continue to run until the cooker temperature reaches 125° F or 18 minutes, whichever occurs first.

3. When the cooling procedure is complete, the fan and power LED will turn off, and the controller will power down. At this point, it is safe to unplug the cooker from its power source.
DO NOT UNPLUG UNTIL THE LED POWER LIGHT IS OFF.


YODER SMOKERS
350°F
350°F
1
2

APP INSTALL + ACCOUNT CREATION

The very first thing you'll need to do is download the free FireBoard app onto your smartphone or tablet. From your mobile device, please visit **https://apps.yodersmokers.com** to obtain download links for iOS or Android platforms.

After installing and opening the FireBoard app, you'll be presented with a login screen **(FIG 16)**.

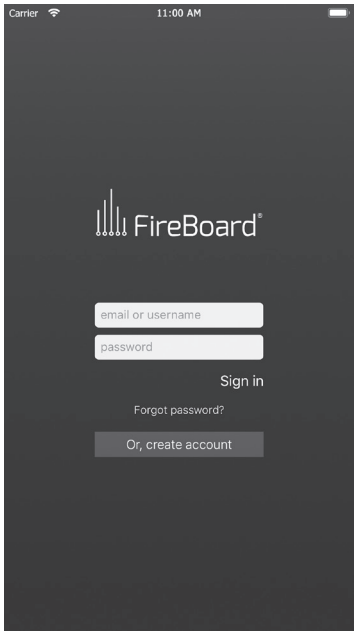

FIG 16

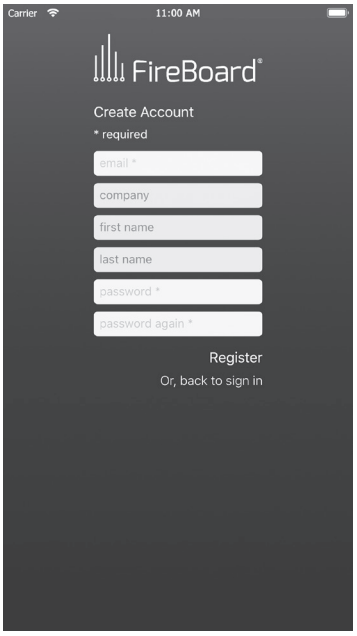

FIG 17

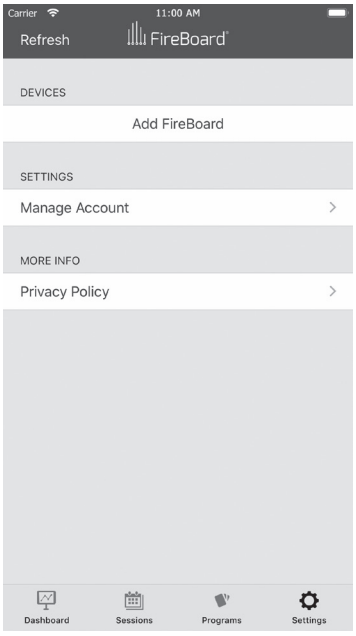

FIG 18

If you don't already have a FireBoard account, you'll need to create one. Tap on "Create Account", fill in the fields **(FIG 17)**, and tap "Register."

Once registered and logged in, you should be located on the settings screen **(FIG 18)**, ready to pair your cooker's embedded FireBoard with the app. If your app isn't already on the settings screen, tap the gear icon in the bottom right hand corner of the screen to navigate to the settings screen.

PAIRING YOUR DEVICE

Next, make sure your cooker is plugged in, and the power button has been pushed. You should see the default screen with the “YS” logo and the default menu displayed on your cooker. Also, please make sure your mobile device’s Bluetooth connectivity is on. It should be noted, Android users must have their mobile device’s location services enabled, or the Bluetooth pairing will fail. While within 30 feet of your cooker, tap the “Add FireBoard” button on your app screen. Your mobile device will scan for nearby FireBoard devices **(FIG 19)** and will find the one embedded into your cooker’s ACS. Once found, the app will show you the serial number of your cooker’s internal FireBoard **(FIG 20)**.

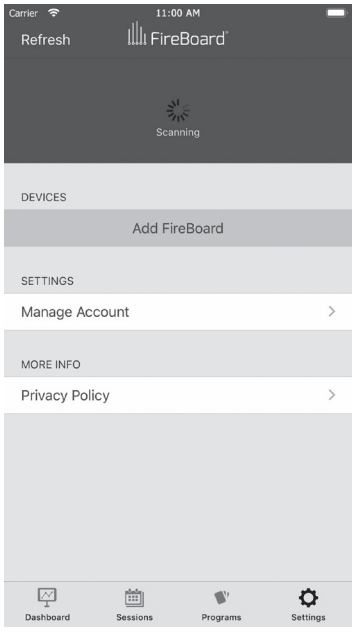

FIG 19

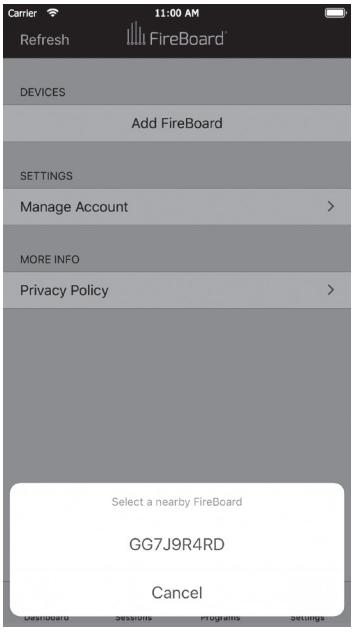

FIG 20

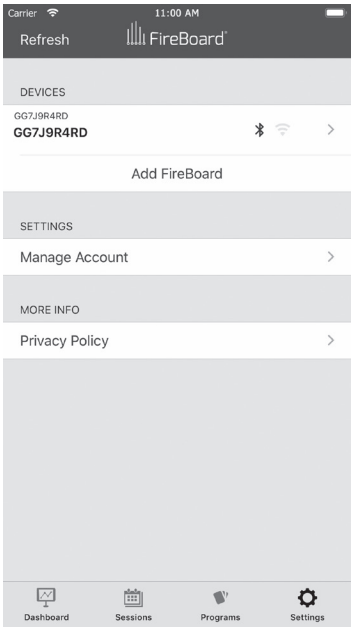

FIG 21

Finally, tap the serial number shown to complete the pairing process. Once complete, you’ll see your cooker’s FireBoard serial number listed in the settings screen. After a few seconds, you’ll also notice the Bluetooth icon becomes active on your cooker’s listing **(FIG 21)**.

CONFIGURING WIFI

Tap your cooker's serial number from the list, and a few tasks can be accomplished from this new screen **(FIG 22)**, but for now, we're interested in getting Wi-Fi connectivity configured, so tap on the "Manage WiFi" option.

In this new screen **(FIG 23)**, you'll notice a place for a network name and a password. If you already know the network name you'll be using, or if the network you use is not broadcasting its name (also referred to as an SSID), you can enter the name and password of the WiFi router or access point on the provided lines. Please note that network names and passwords are case sensitive.

If you're unsure of the exact spelling of your network name, or you are unsure of which networks are within the range of your cooker, you can use the "View Available Networks" button to have your mobile device scan for nearby 2.4GHz networks **(FIG 24)**.

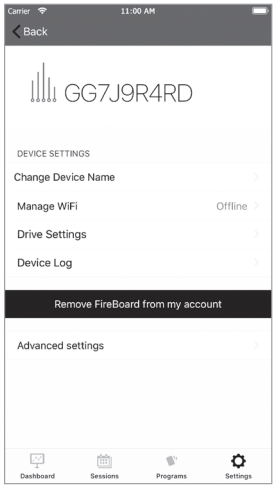

FIG 22

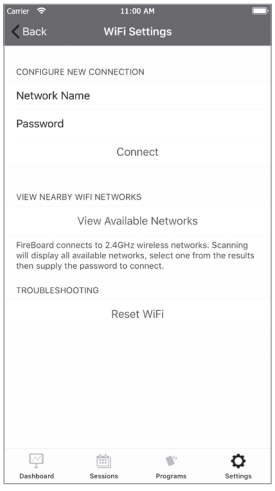

FIG 23

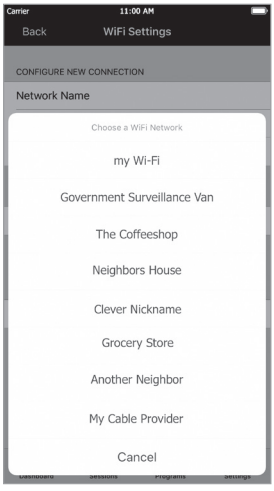

FIG 24

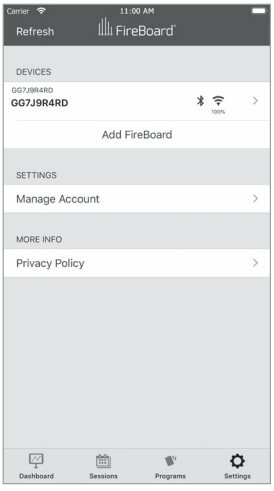

FIG 25

Tap on the Network you'd like to use, provide the appropriate password, and tap the "Connect" button. It may take up to a minute for the connection to fully establish, but you'll soon see that the WiFi icon on your cooker's listing will activate **(FIG 25)**. If, after a minute or so, it does not, try re-entering your network name and password, and try connecting again.

THE APP IN DEPTH

Before we get into all the details, we'd like to point out that the cooker cannot be started from the app. You will have full control once it has been started - including the ability to shut it down - but the cooker must be started from its front panel before the app can do anything aside from reporting current status. This helps ensure the safe operation of your cooker.

THE DASHBOARD

If you click on the first icon of the tab bar (the navigation that spans across the bottom of the screen), you'll be presented with the Dashboard **(FIG 26)**. This is your quick overview screen, as well as one of the main sections you'll use to interact with your cooker.

The large gray bar across the top indicates your cooker's current setpoint, internal temperature, and the temperature of the two probes, if you have them plugged in. If you don't have the probes plugged in, or the pit is not currently running, you will see dashes in place of the temperature readings.

Below the large grey bar is an area used to show the various temperature readings available in graph format. We will get into more detail on this in a bit.

Once the cooker is running, the setpoint and pit values will reflect the current status of the pit **(FIG 27)**.

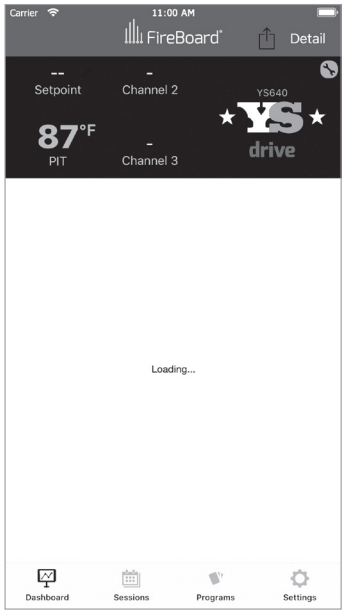

FIG 26

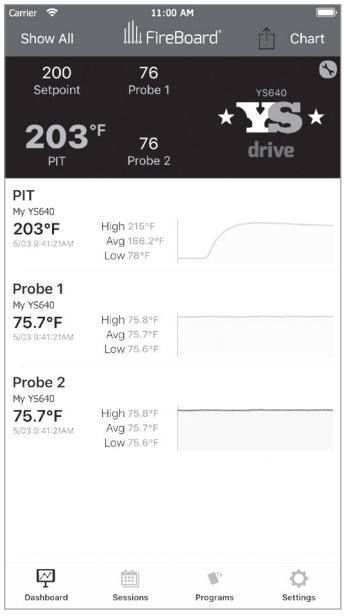

FIG 27

NOTABLE DASHBOARD FEATURES

• You can change the pit's setpoint by tapping on the setpoint in the gray banner **(FIG 28)**. Simply enter your new desired setpoint and tap the "Set" button. Please note that changes to the setpoint take a few seconds to take effect. Please be patient for them to be reflected in the cooker and in the app's dashboard.

• The names of the two probe ports can be set according to what you're cooking. Tapping on the probe port in the grey banner will allow you to change its name **(FIG 29)**. This name will also be used in the various charts throughout the app.

• An alert – in the form of an app alert, an SMS text message, or an email – can be set to let you know when one of the meat probes are at a certain temp. Simply tap on the temperature shown for the probe in the gray banner, tapping "Add New Alert," then "Set-up Alert" and set up your parameters **(FIG 29, 30)**.

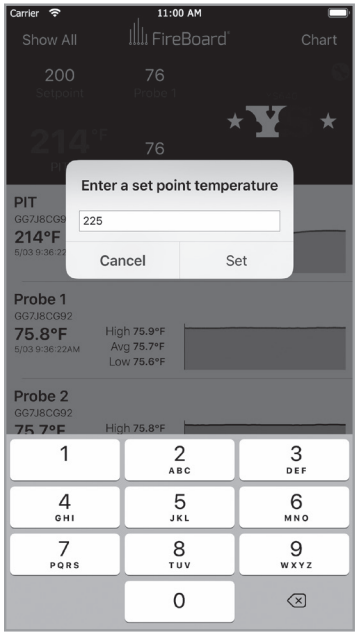

FIG 28

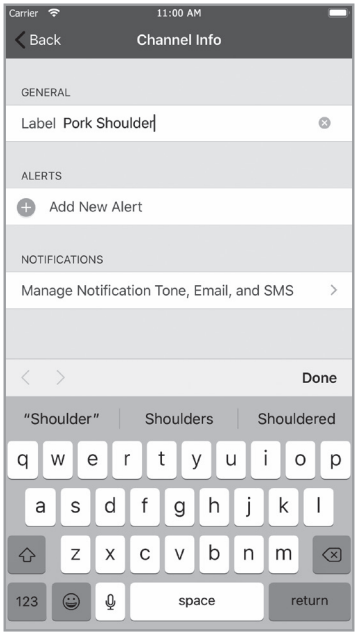

FIG 29

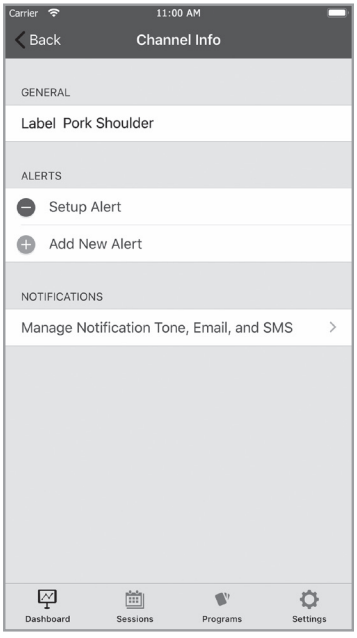

FIG 30

Alerts can be restricted to only occur during specific times of the day or at a given frequency by using the "Custom Start/Stop Time" selection. Please note that SMS text and email alerts require a little bit of set-up in the settings screen, which is described later in this document.

NOTABLE DASHBOARD FEATURES (CONTINUED)

• You can choose between two visualizations of the running temperature data: a basic chart, and a detailed chart. You can toggle between the two by tapping on the word “Chart” or “Detail,” respectively, in the title bar area of the app **(FIG 31, 32)**.

• Tapping the small wrench icon in the upper right of the gray bar will take you to a section that allows you to choose between multiple cookers (if you have more than one paired to your mobile device) **(FIG 33)** and also allows you to shut down your cooker **(FIG 34)**.

FIG 31

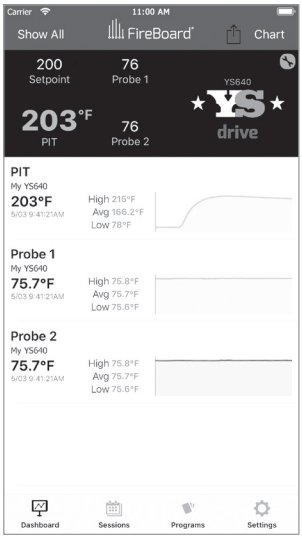

FIG 32

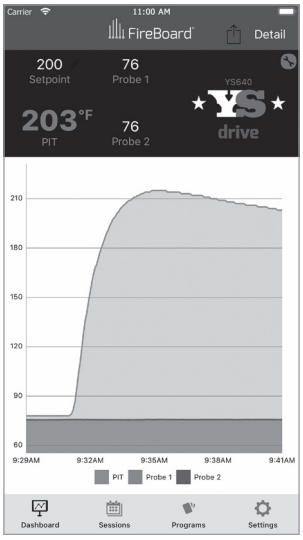

FIG 33

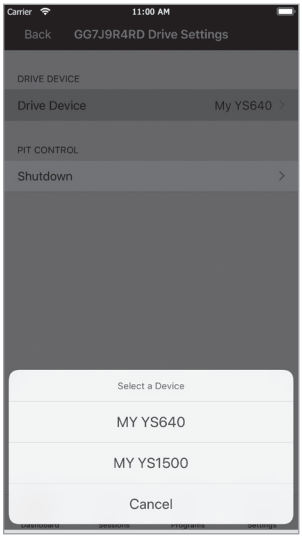

FIG 34

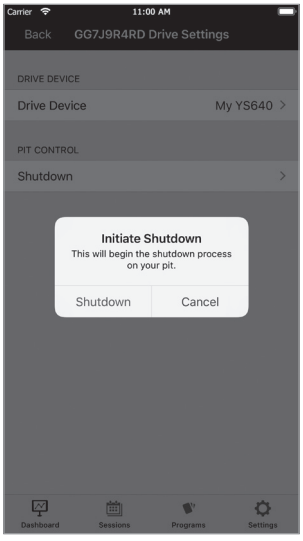

SESSIONS

The second icon from the left on the icon bar will navigate you to the sessions screen. This is straightforward. A session is a record of pit and probe temperatures throughout a cook. Sessions are created automatically when probes are plugged in, or your cooker is started. By clicking the plus sign (on Android) or the “New” button (on iOS), a new session can be started at the time of your choosing. Sessions display as graphs, very similar to the detail graph shown in the dashboard.

PROGRAMS

Your cooker can be set up to execute a series of instructions that construct a cooking plan, called a program. This program consists of one or more steps that run until a criterion is met. That criterion can be a set amount of time or until one of the two meat probes hit a given temperature. The programs section can be reached by tapping the third icon from the left on the apps tab bar **(FIG 35)**. To add a new program, tap on the “Add New Program” button. A new dialog will pop up to prompt you to choose the type of program you’d like to add **(FIG 36)**.

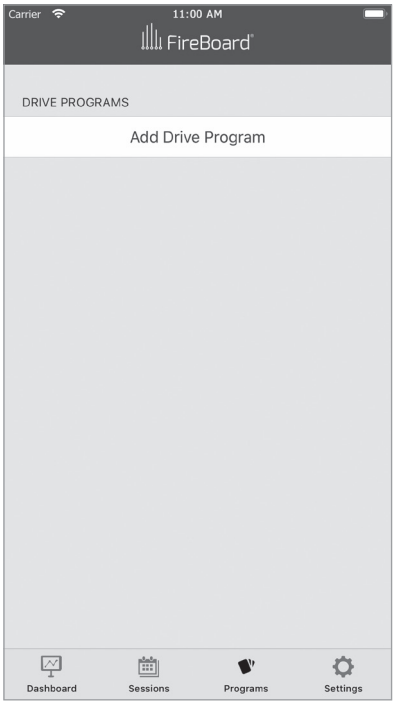

FIG 35

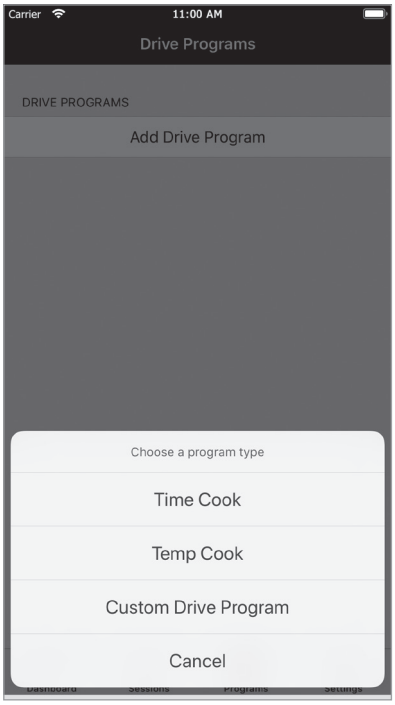

FIG 36

PROGRAMS (CONTINUED)

You have three options:

- **Time Cook:** Cooks at a given setpoint for a given amount of time. Once complete, the cooker will change its setpoint to given holding temperature. All three parameters are user-definable.
- **Temp Cook:** Cooks at a given temperature until one of the probes reaches a given temperature. Once complete, the cooker will change its setpoint to a given holding temperature. Again, all three parameters are user-definable.
- **Custom Drive Program:** A complete user-definable series of steps that can combine cooker setpoints, run-times, and measured probe temps to form any conceivable cook plan you desire.

For the purposes of this manual, we'll walk through a simple custom program example for cooking burgers. This program starts the cooker off at a low setpoint so the burger patties can enjoy some time in the smoke, before ramping up to grilling temperature and cooking until our patties are at 145° internal and ready to carryover cook to a medium level of doneness.

Tap the "Custom Drive Program" button. The screen you come to next is a blank custom program **(FIG 37)**. We'll next tap the "Add Step" button. Set the cooker to run at 180° for 1 hour and 20 minutes **(FIG 38)**.

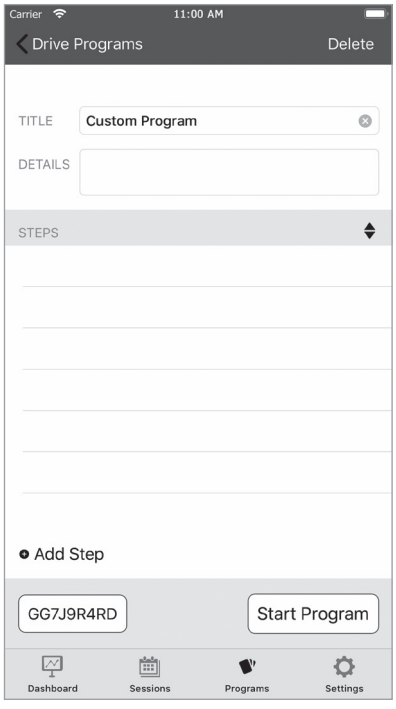

FIG 37

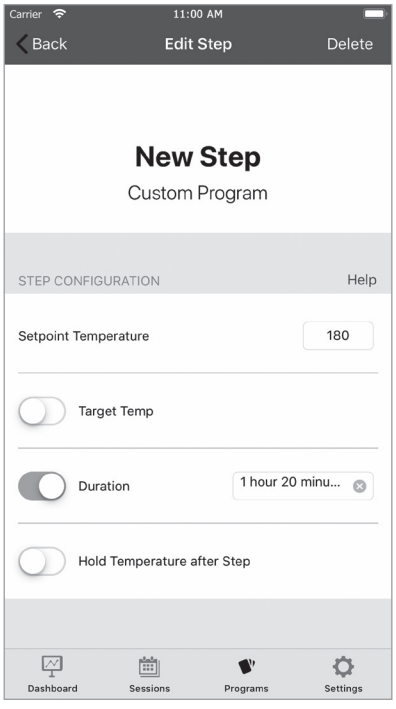

FIG 38

PROGRAMS (CONTINUED)

Steps save automatically. Just press the back button to return to the previous screen, and add a second step. This time, we'll set the cooker to run at 450° until the measured temperature on probe 1 has reached 145°. You'll note we're also setting a hold temperature of 180° **(FIG 39)**.

In actuality, this automatically creates a third step with a setpoint of 180° and no time limit. Pressing back will show the resultant program, and now fill in the Name and Description fields **(FIG 40)**.

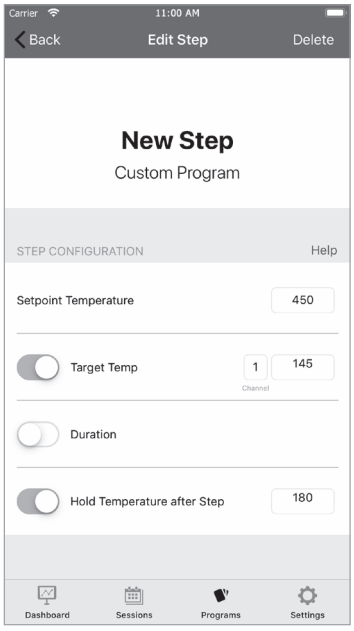

FIG 39

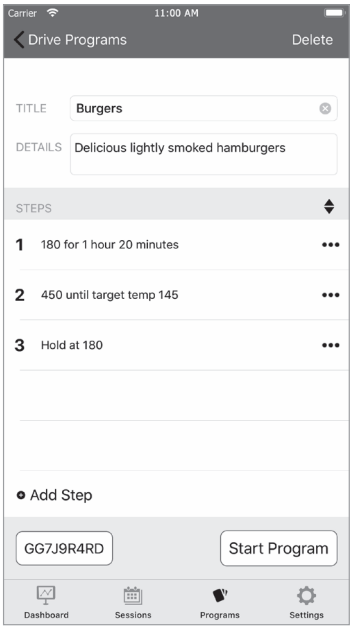

FIG 40

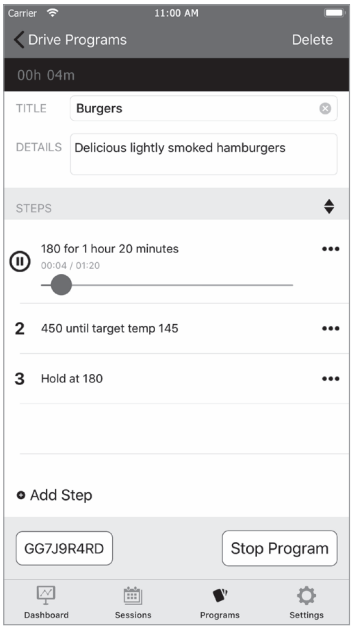

FIG 41

After making sure that the "Start" button on the cooker's front panel has been pressed and that the cooker is in operation, you can now tap the "Start Program" button, and your new cook plan will begin within a few seconds **(FIG 41)**.

PROGRAMS (CONTINUED)

While a program is running, you have the freedom to tap on any other step in the program, which will cause the cooker to skip to that step after a few seconds. You may also stop or pause a running program at any time, or delete a program by tapping into it and then tapping the “Delete” button in the upper right of the app’s title bar **(FIG 42)**. Similarly, individual steps of a program can be deleted by tapping into them and tapping the “Delete” button in the upper right of the app’s title bar.

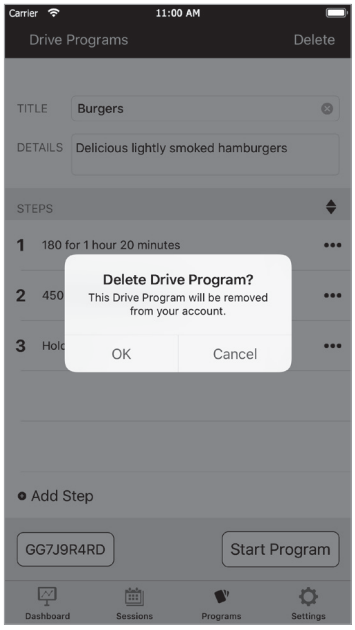

FIG 42

SETTINGS

Some of the information you'll see in this screen you're already familiar with and is covered in the First Steps section of this document, so we won't cover that again here. Tapping on the gear icon of the tab bar in the lower right corner of your screen takes you to the settings page.

ACCOUNT MANAGEMENT + ALERTS

Tapping on the "Manage Account" button takes you to the account overview screen **(FIG 45)**. Here, you can see at a glance how your account is configured, including the settings of any alerts you may have set up. Tapping the edit button takes you to the account edit screen. This section allows you to edit the name associated with your FireBoard account (the email address is not changeable) and, perhaps more importantly, set up the basic information needed for the types of notifications you desire to use. We support app alerts, SMS text alerts, and email alerts.

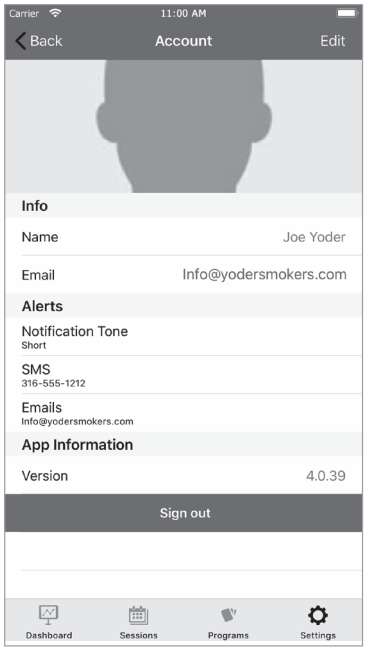

FIG 45



FIG 46

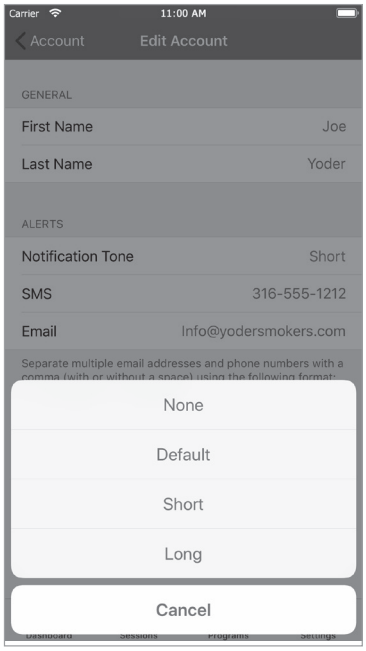

FIG 47

App alerts are the most convenient and straightforward alerts; they use your mobile device's native alerting system and one of our custom tones to let you know one of the criteria you've set up has been reached. **(FIG 46)** By tapping the "Notification Tone" line, you can customize the notification tone used to one of your liking. **(FIG 47)**.

We also support SMS text alerts and email alerts. Tapping on the "SMS" or "Email" lines will allow you to edit the phone numbers and email addresses used to send those types of alerts. Tapping "Back" will return you to the account overview screen, and tapping "Back" again will return you to the main settings screen.

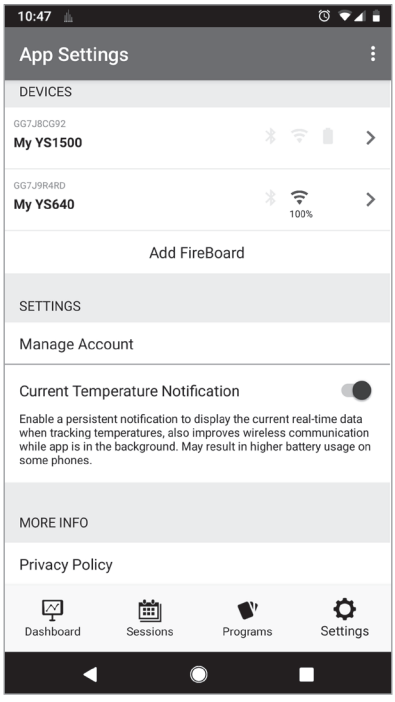

FIG 48

CURRENT TEMPERATURE NOTIFICATION (ANDROID ONLY)

You can enable what's known as a "persistent notification" – a notification that will stay in your notifications area (like the swipe-down action on many Android mobile devices) – that will show you the current temperature of your pit and the meat probes, if you have them plugged in. Simply toggle this notification on and off according to your preference **(FIG 48)**.

DEVICE SETTINGS

By tapping on your device, you'll be back in the "Device Settings" section. If you have more than one device listed, these settings are specific to each of your device.

NAMING YOUR COOKER

You can change the name your cooker is referred to throughout the app. By tapping on the "Change Device Name" line, you can edit the name to your liking **(FIG 49)**, then tap "Submit" to save your changes and return to the device settings screen.

DRIVE SETTINGS

While Standalone FireBoard devices have more options available in the "Drive Settings" section of the app, the only option embedded in your ACS is the ability to turn the pit off **(FIG 50)**. This is also available, as previously mentioned, from the dashboard section of the app.

DEVICE LOG

Tapping on the "Device Log" line will show a large spectrum of information about the state of your cooker's ACS and its embedded FireBoard **(FIG 51)**.

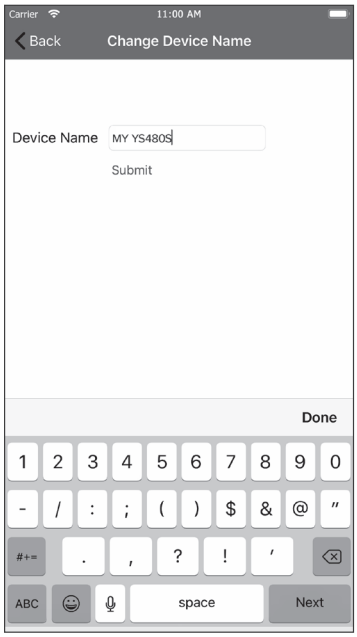

FIG 49

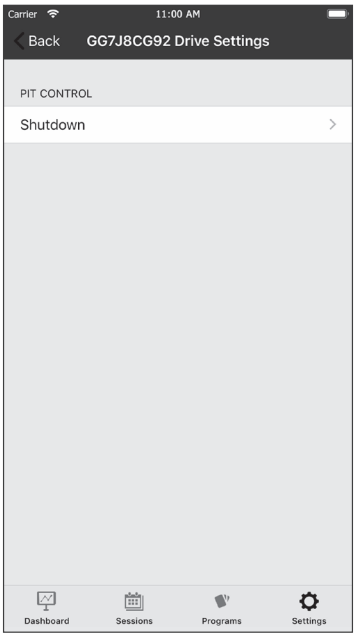

FIG 50

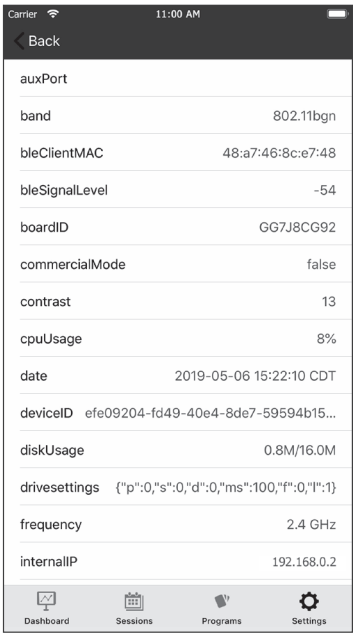

FIG 51

REMOVING YOUR COOKER FROM THE APP

Should you need to remove your cooker from the app for whatever reason, the big red “Remove FireBoard from my account” will accomplish this for you. You will be prompted to confirm that this is indeed your wish. It should be noted that any given cooker can only be added to a single account at a time.

ADVANCED SETTINGS

This section of the app contains some seldom-used but occasionally helpful options regarding your preferred app temperature scale, adjusting your cooker’s display screen contrast, and a couple of troubleshooting options that should only be used as instructed by your Yoder Smokers support representatives.

NEED ASSISTANCE?

CustomerService@YoderSmokers.com

877.409.6337 (OPTION 2)

RECOMMENDED INSPECTION PROCESS FOR

ROUTINE COOKER MAINTENANCE

COOKING GRATES

Every three months, or depending on use, bring the cooker up to the desired cooking temperature and use a cooker brush to clean the grates before evenly coating the grates with vegetable oil.

HEAT DIFFUSER PLATE

Every three months, or depending on use, it is recommended that the heat diffuser plate is scraped clean to removed any buildup of grease. A plastic putty knife is ideal for this process.

STAINLESS STEEL BURN GRATE

It is important to regularly check the combustion air holes located on the floor and sides of the burn grate for any blockage or build-up. Using a wire brush or flat-head screwdriver, scrape off any build-up or debris. To access the burn grate, remove the access door.

BURN GRATE INSPECTION

To ensure the pit is burning efficiently, a visual inspection of the burn grate is required periodically. The burn grate should sit flat against the back wall of the fire box. Due to the intense heat that is created, the burn grate can change shape. There should be no more than a 1/8” gap from the back wall to the burn grate. If a larger gap exists, it must be corrected as follows:

1. Start by removing the burn grate from the firebox and placing it on its top.

2. Next, carefully step on the burn grate **(see diagram below)** and apply enough pressure to bend it back to its original shape. **DO NOT** apply too much pressure or you will over correct the burn grate and it will not fit back into the firebox.

3. Place the burn grate back into the firebox and check the gap between the back wall and the burn grate to ensure a proper fit. If a gap still exists, then repeat steps 1 and 2.

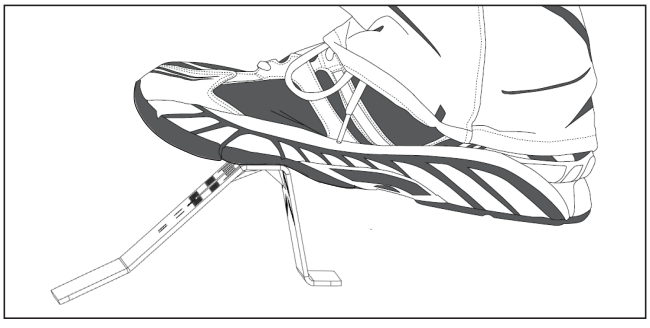

CERAMIC IGNITER

When inspecting the firebox assembly, confirm that the igniter assembly, tube and igniter rod are free of ash or other debris. Periodically inspect the igniter tube to ensure it is tightly secured by grabbing the tube and turning it clockwise.

COOKING CHAMBER

It is recommended every 7-10 cooks you inspect and thoroughly clean the interior of the cooking chamber. Any excess grease can be cleaned up using a plastic scraper and paper towels. Pay particular attention to the grease channels on the right hand side of the cooking body. At the beginning of the season, and as necessary throughout the rest of the year, degrease-grease the interior with a citrus based cleaning solution. Ensure that the cooker is **completely cold** before using a shop vacuum or before scooping out and disposing of the ashes.

It is recommended that the firebox assembly is regularly inspected to be certain that it remains free of ash and debris which will ensure proper performance. The firebox is a fully welded structure that carries the burn grate and channels the combustion air. It is bolted to the cooking chamber floor. The seams on the hopper wall and the floor of the cooking chamber are sealed with a high temperature silicone. Perform regular inspection of the silicone seal. If any seal is broken, remove the old silicone, clean the surface, reapply new high temperature silicone, and let it cure for 24 hours before use. We recommend using *Permatex 81160* high temperature silicone or *Sure Bond SB-188*.

The seating of the burn grate into the firebox is critical for proper cooker performance. Begin by resting the right hand side of the burn grate on the fire pot and then pressing down on the left hand side of the burn grate until fully seated. Once the burn grate is seated there is little-to-no movement in this assembly. Also, check to be certain that the igniter assembly is centered in the respective hole in the burn grate.

GREASE MANAGEMENT AREA

Visually inspect the grease drain and surrounding area for buildup, and scrape clean as needed.

EXTERIOR PAINTED SURFACES

Yoder Smokers are painted with high heat silicone paint. When cleaning the smoker, surfaces should be washed with mild soap and water to remove any grease, food oils, errant seasoning sprays or rubs as they are corrosive to the surface. The paint should be periodically inspected and touched up when scuffs or bare spots are exposed. For information about high-heat paint that can be used for touch-up, contact customerservice@yodersmokers.com.

EXTERIOR RUST PREVENTION

Every six months, we recommend seasoning the exterior of your grill to protect and maintain the integrity of the paint, as well as the endurance of the finish. First, wash the exterior of the grill with mild soap and water. Once dry, coat the pit with a high quality mineral oil or ACF-50, an Ultra Thin Fluid Compound (UTFC) that actively treats metal using advanced polar bonding technology. Once applied, allow the pit to run at 375 degrees until the oil is absorbed into the paint completely.

RECOMMENDED PROCEDURE FOR RESTORING
BLUETOOTH CONNECTIVITY

1. Confirm that the Bluetooth and location services are enabled on the device used to connect to the ACS controller.

a. To use FireBoard on your Apple product, make sure your device is one of the following with iOS8 or later:
- iPhone 4s or later.
- iPad (3rd generation) or later.
- iPad mini or later.
- iPod touch (5th generation) or later.

b. To use your FireBoard on an Android device, make sure your device is on Android 5.0 or later and is equipped with a Bluetooth 4.0+ radio.

2. Check the antenna to ensure that it is secured tightly to the hopper. The antenna is located under the cart on competition cart models.

3. Plug in and power on the cooker but DO NOT press the start button.

4. Open the FireBoard app on the device and tap “Settings”.

5. While within 30 feet of your cooker, tap the “Add FireBoard” button on your app screen. Your mobile device will scan for nearby FireBoard devices and will find the one embedded into your cooker’s ACS. Once found, the app will show you the serial number of your cooker’s internal FireBoard. Tap on the serial number and it will display the serial number of the FireBoard under “Devices” in the app. *NOTE: Android users must have location services enabled or the Bluetooth pairing will fail.*

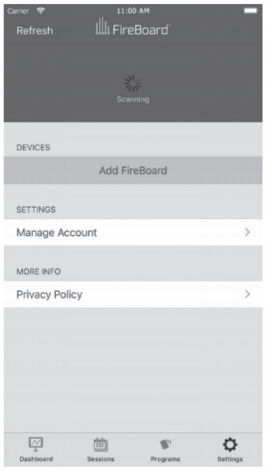

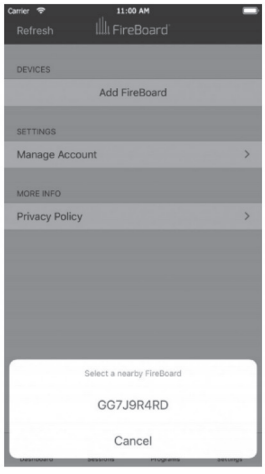

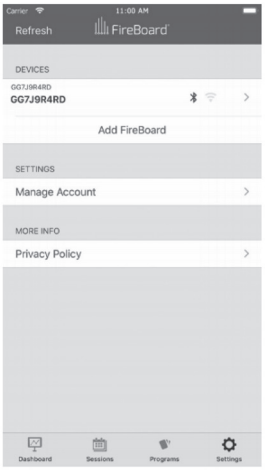

RECOMMENDED PROCEDURE FOR RESTORING
WIFI CONNECTIVITY

RECONNECT FIREBOARD TO WIFI
To regain your WiFi connection, go to the Fireboard app on your mobile device and tap on the “Settings” icon on the bottom right of your screen. From here, tap on the name of your FireBoard under “Devices”, and then tap “Manage WiFi”. If your mobile device is already connected WiFi, the app will auto-populate your network name for you — just enter your network password and press “OK”. The FireBoard may take up to a minute to connect. Your network name will be displayed in your app once connected.

If you attempt to connect without success, your ACS Controller’s wireless settings may need to be reset. On the “Configure WiFi” screen, simply press “Reset WiFi”, wait a few seconds and attempt to connect the WiFi again. This action will remove any previously entered credentials that could possibly be causing a connection issue. Once reset, try connecting again.

SIGNAL STRENGTH AND FREQUENCY
If you are having trouble maintaining a wireless connection to your FireBoard, it could be your signal strength. Signal strength is represented in -dBm format (0 to -100). The closer the value is to 0, the stronger the signal. For example, -41dBm is a better signal strength than -61dBm. Anything lower than -70dBm will make it hard for the FireBoard to maintain a connection.

To check your signal strength on your ACS Controller w/FireBoard unit on the app, tap on “Settings” then select your device and tap on “Device Log”. Scroll down until you see signal level.

IF YOU DO HAVE A POOR WI-FI CONNECTION, THERE ARE A FEW THINGS YOU CAN TRY:
- Ensure your wireless network is 2.4 GHz
- Confirm that the antenna is secured tight to the hopper and confirm there is no visual damage. *(The antenna is located under the cart on comp cart models.)*
- Move your wireless router closer to the FireBoard
- Install a range extender on your network

FREQUENCY
The wireless module in all current generation FireBoards only supports 2.4GHz. Many wireless routers have a 5GHz option, but this frequency sacrifices both range and ability to transmit through walls or structures. If your router supports both 2.4Ghz and 5Ghz and your SSID and password are the same for both, this can cause an error when connecting. Make sure that you use a different password for each frequency.

RECOMMENDED PROCEDURE FOR

TROUBLESHOOTING FAILED IGNITION

WARNING: *If your pellet cooker fails to start, you MUST remove the grates, heat diffuser and any accumulated pellets BEFORE you attempt to start it again. Failure to do so could result in an uncontrollable fire in the body of the cooker, which has the potential to cause physical damage to the cooker.*

1. THE BURN GRATE WAS NOT EMPTIED OF ASH FROM PREVIOUS USE.
To prevent this type of failure from excessive ash, prior to use, empty all of the ash from the burn grate and firepot. As ash accumulates in the burn grate, it can overwhelm the igniter and prevent contact with the pellets, so keeping it clean will prevent issues with combustion.

2. THE BURN GRATE DOES NOT FIT CORRECTLY INSIDE THE FIREPOT.
The high heat generated from burning pellets in the burn grate can cause the burn grate to change shape, which may cause the misalignment of the igniter assembly. Follow the procedures outlined on page 34 to correct the fitment of the burn grate.

3. THE IGNITER IS NOT ALIGNED PROPERLY WITHIN THE HOLE OF THE BURN GRATE.
The opening of the igniter tube must be positioned higher than the bottom of the burn grate. To properly align the igniter assembly to the burn grate, you may gently pull up or push down on the end of the igniter tube to correctly align it with the hole in the burn grate. **NEVER** touch the igniter unless it is completely cold.

4. THE PELLETS MAY BE DAMAGED BY MOISTURE OR BE OF POOR QUALITY.
Poor quality or compromised pellets can prevent proper ignition. Pellets with too much moisture will begin to swell and will not ignite when heated. The quality of a pellet can also be a cause of improper ignition. A quality pellet will have a coating or “shine” on the outside. When a pellet loses it’s shine, it is a sign of the pellet becoming degraded and become difficult or unable to ignite when heated.

5. THE IGNITER IS DAMAGED OR FAULTY.
Performing factory reset may restore proper igniter function. To do this, press the power button then Menu/Settings/Advanced/Factory Reset and follow the on screen instructions. Once the controller has been reset, perform a visual test of the igniter, refer to page 43. If you find that the igniter does not glow during the test, then it will need to be replaced.

RECOMMENDED PROCEDURE FOR

MANUALLY IGNITING THE GRILL

Here are the steps to manually light the cooker in the event that the igniter fails. (Steps 2 & 3 only apply if the igniter has developed a dead short and is tripping the GFCI or blowing the fuse.)

1. Be sure the unit power cord is unplugged. Remove the cooking grates, diffuser plate and burn grate.

2. Reach into the firebox and locate the wires connected to the igniter, then pull the igniter wires into the firebox.

3. Unplug the igniter's weather-tight connection and then push the wires back into the opening.

4. Reinstall the burn grate and place a small handful of pellets into the grate.

5. Light the pellets with a torch, starter gel or starter stick.

6. Once lit, plug the power cord into a GFCI outlet and press the power button. Once the Men screen is displayed, press Start. The feed system begins the prime cycle before defaulting to the set temperature feed rate.

7. Set the desired cooking temperature (default set point is 350° F).

8. Your smoker will begin to produce smoke during "startup" within approximately 3 to 5 minutes. To check if the pellets ignited, open the smoker and a flame should be visible in the burn pot area. You will be able to view this without having to touch any hot surfaces.

FREQUENTLY ASKED QUESTIONS

QUESTION	ANSWER
WHY DOES MY GRILL OVERSHOOT THE SET POINT / TEMPERATURE AT STARTUP?	The initial overshoot is dependent on how much fuel has been fed into the firebox during the initial heat-up of the grill. Allow 20-30 minutes for the temperature to stabilize before placing food inside.
WHAT BRAND OF PELLETS ARE RECOMMENDED TO USE IN MY GRILL?	BBQR's Delight brand is recommended as they provide the maximum performance, consistency, and low ash from bag to bag. Yoder Smokers uses them exclusively for all product testing and development at the factory.
CAN I USE AN EXTENSION CORD?	Yes. Make sure it is a heavy-duty cord rated for outdoor use and marked with the suffix letter "W" as well as with a tag stating "Suitable for use with outdoor appliances."
WHY DOES THE TEMPERATURE FLUCTUATE ON MY GRILL?	You are cooking with a live, wood fire. As a result there will be temperature swings — the grill will not hit your set point and remain fixed. As pellets are added and burned, the temperature will go above and below your set point. The ACS controller works to maintain an *average* temperature over a span of time.
AT WHAT TEMPERATURE SHOULD THE HEAT DIFFUSER/ACCESS DOOR BE REMOVED?	400° F
WHAT IS THE RECOMMENDED PROCEDURE TO SEASON THE EXTERIOR OF THE GRILL?	Wash the exterior of the grill with mild soap and water. Once dry, coat the grill with mineral oil or ACF-50. Next, allow the grill to run at 375° F degrees until the oil is absorbed into the paint completely.
WHAT HAPPENS IF MY PELLETS RUN OUT?	The controller has a reignite feature in the event you run out of pellets and lose your fire. First, inspect the firepot remove excess ash or pellets. Select 'Menu', then scroll to 'Reignite'.
CAN I START MY GRILL USING THE APP?	For safety, the grill cannot be started from the app.
HOW DO I SET UP THE GRILL FOR DIRECT COOKING?	Remove the heat diffuser plate and install the optional GrillGrate® cooking grates on the left side of the grill, above the fire box.
HOW DO I SET UP THE GRILL FOR INDIRECT COOKING?	Keep the heat diffuser plate and access door in place, then install the optional GrillGrate® cooking grates or standard cooking grates.

TROUBLESHOOTING

ISSUE	SOLUTION
GRILL WILL NOT IGNITE AFTER PUSHING 'START'	• Make sure burn grate is clean / free of ash. • Ensure igniter is positioned in center hole of burn grate • Remove the burn grate to visually verify if the igniter is red / getting hot. If not, it will need to be replaced). *In the meantime, the grill can be used temporarily by manually lighting the pellets. (See page 39)*
CONTROLLER WILL NOT POWER ON	• Confirm power at the outlet being used, and ensure the power cord is fully seated into the socket on the back of the pellet hopper. (On comp cart models, check the short power extension under the cart into the hopper.) • Inspect the fuse to confirm it is not blown.
FOOD PROBE READING TOO HIGH OR TOO LOW	Validate the accuracy of the meat probes using the ice bath method.
PELLETS ARE NOT DROPPING / AUGER IS NOT TURNING	Remove all pellets from hopper and inspect the auger for any obstruction. If the auger is still not turning, contact Customer Service assistance,
ISSUES CONNECTING CONTROLLER TO BLUETOOTH	• Confirm that the Bluetooth and location services are enabled on your device • Reset the ACS controller by unplugging the power cord for 60 seconds. • Attempt adding the FireBoard 2-3 times before contacting Customer Service.
ISSUES CONNECTING CONTROLLER TO WIFI	• Ensure you are attempting to connect to a 2.4 Ghz network. • Confirm the antenna is tightly secured to the hopper and there is no visual damage. (The antenna is located under the cart on comp cart models.) • Move your router closer to the grill to see if signal improves. If you still cannot connect to Wi-Fi, contact Customer Service.
CONTROLLER SHOWS 600+°F AFTER PRESSING 'START'	This is indicative of a faulty PT-1000 temperature probe connection or a bad probe. Contact Customer Service for assistance.
CONCERNS WITH ACCURACY OF TEMPERATURE DISPLAYED	If you are concerned with the accuracy of the display temperature of your pellet grill, refer to the Custom Temperature Offset section on page 46.

GETTING STARTED FOR TESTING WITH
ONBOARD DIAGNOSTICS

The Yoder Smokers ACS controller features built-in test diagnostics to assist with verifying and testing functionality, and to help diagnose issues and potential component failure. To run the tests, begin with the steps below:

1. RESET THE POWER
Plug the power cord into the cooker, and into power outlet. If the cooker is already plugged into power, unplug from the power outlet, wait 30 seconds and plug the power cord back into the power outlet.

2. POWER-UP THE COOKER
Push the “Power” button. Wait for the display to show the YS logo and Fireboard logo, then press the button next to **MENU.**

3. SELECT “SETTINGS”
Rotate the selector knob to **SETTINGS** then push the knob to select. **(FIG 52)**

4. SELECT “ADVANCED”
Rotate the selector knob to **ADVANCED** then push the knob to select. **(FIG 53)**

5. SELECT “TEST”
Rotate the selector knob to **TEST** then push the knob to select. **(FIG 54)**

Next, your screen will show options to test the igniter, fans, and auger, as well as view the current temperature reading of the thermocouple. ***Please follow the detailed instructions below for how to properly test each component on your cooker.***

FIG. 52

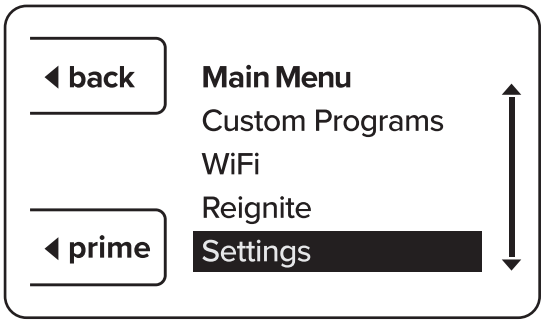

FIG. 53

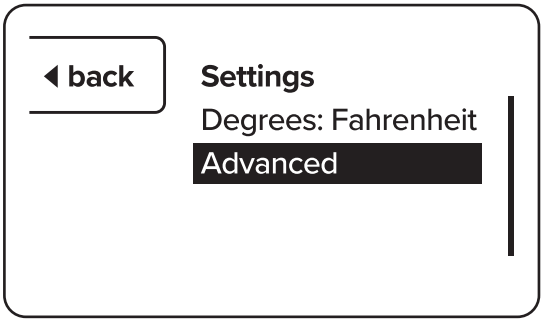

FIG. 54

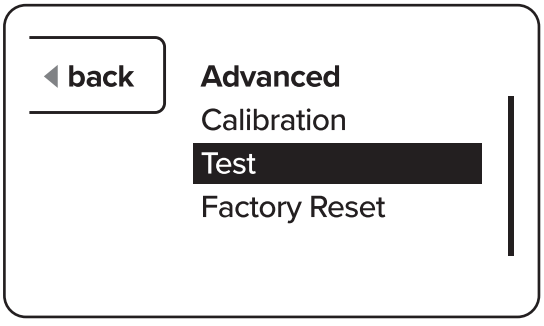

RECOMMENDED PROCEDURE FOR
TESTING THE IGNITER

1. REMOVE COOKING GRATES
Open the cooking chamber lid and remove all cooking grates from the cooker.

2. REMOVE HEAT DIFFUSER
Remove the heat diffuser plate (or remove the door in the heat diffuser if using the optional 2-piece diffuser.)

3. CLEAN FIREPOT
Remove the burn grate, then vacuum all the ash from the fire pot and igniter.

4. TEST IGNITER
Rotate the selector knob to **TEST IGNITER** and push the knob to select the menu item. **(FIG 55)**

FIG. 55

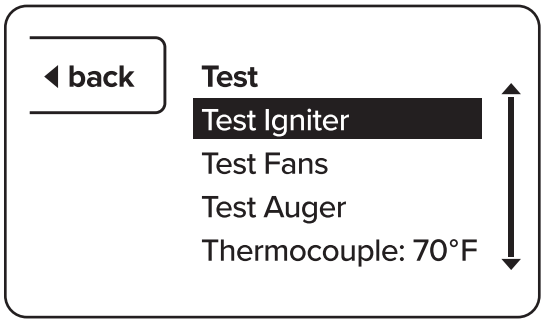

DO NOT TOUCH THE IGNITER DURING THIS TEST
OR FOR 30 MINUTES AFTER THIS TEST HAS COMPLETED!

The ACS controller will now apply power to the igniter for 30 seconds, as per the countdown on the display. During this 30 seconds you should observe the igniter get hot and glow red.
If the igniter does not react or get hot, please contact Yoder Smokers Customer Support: CustomerService@yodersmokers.com | 877.409.6337 (Option 2).

RECOMMENDED PROCEDURE FOR THE

ACS TEMPERATURE TEST

This test will allow you to verify that your pellet cooker is functioning normally. When running this test, it is strongly suggested that you use BBQr's Delight brand pellets, if available. For proper results, remove old pellets from the hopper and use fresh pellets.

This test will take 2 hours. Please make sure the ACS controller is connected to the Fireboard app via Wi-Fi prior to starting the test. External temperature probes **MUST** be located on the bottom grate **EXACTLY** at the locations shown in the diagram below.

The tip of Probe 1 should be precisely 10 inches from the left wall of the grill, the tip of probe 2 should be 20 inches from the left wall of the grill. (See diagram below)

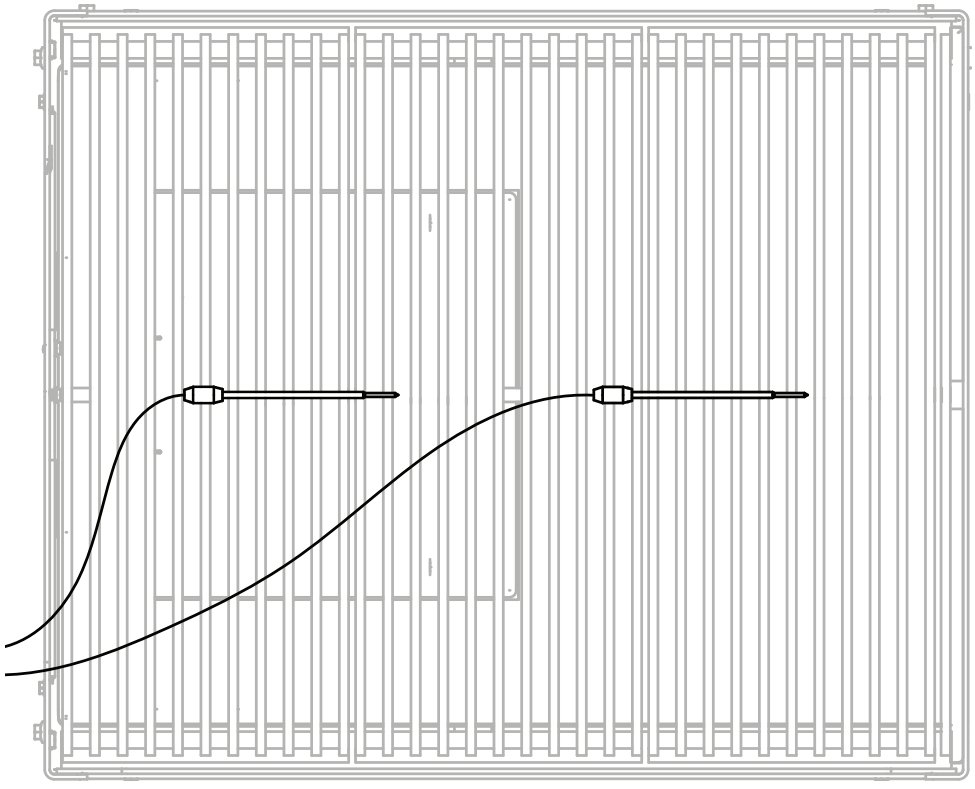

1. This test requires that you first completely clean your cooker by vacuuming all ash from the burn grate, firepot, and the entire body of the cooker. You also need to clean all cooking debris and degrease all surfaces inside the cooker, including the heat diffuser, thermocouple, grease channel (including the drain hole), and inside the chimney.
2. Verify the silicone seals are not damaged or missing from around the firepot. Clean and repair all silicone seals per the manual, if necessary, BEFORE continuing with the test.
3. Ensure that the burn grate fitment into the firepot is as specified on page 34 of this manual. Correct the fitment prior to continuing the test, per the instructions in the manual, if required.
4. Unplug the power cord, wait 30 seconds, and plug the power cord back into the cooker.
5. Verify that you have the pellet hopper full, and if not, add pellets.
6. Open the lid to the cooker, press the “Power” button followed by the “Start” button.
7. Set your desired test temperature. **DO NOT CHANGE THE TEMPERATURE AFTER SETTING IT.**
8. After you see fire in the burn grate, close the door on the cooker.
9. From this point forward, for the duration of the test, **DO NOT OPEN THE GRILL’S DOOR.**
10. Once the test has concluded, please take the following pictures listed below and email them, along with what session contains the test data AND the email address used for the FireBoard app, to this address: customerservice@yodersmokers.com

    - Inside the cooker showing the probe placement on the grates
    - Inside the cooker with the cooking grates removed and heat diffuser in place
    - Inside the cooker showing the firebox with the burn grate installed

Because pellet cookers are burning wood, it is impossible to have a listing of data points that are all the same as the temperature setting on the controller. There will be higher temperature readings as pellets are fed into the burn grate and ignite, thus adding additional heat into the cooker (bigger fire). There will also be lower temperature readings as the pellets are consumed and turned to ash, allowing for the cooker to cool down (smaller fire). Also, the temperature shown on the display, unlike any external temperature probes used, is not shown in “real time”. The temperature shown on the display is a rolling 90 second average.

Should you choose to analyze the data yourself, calculate the average of all the readings from the display, and optionally, do the same for the external temperature probe(s). Compare the average readings from the display that you calculated, to the original temperature that you set on the controller at the beginning of the test. If the average is within 35 degrees, high or low, of the controller set temperature, your cooker is functioning as it should.

RECOMMENDED PROCEDURE FOR INPUTTING A

CUSTOM TEMPERATURE OFFSET

Calibration of the ACS controller is a function that allows you to “dial in” your cookers performance, based on your requirements. This calibration is NOT something that you do constantly, but rather something that you may do to periodically verify your cooker’s performance. Calibration is NOT required for your cooker to function, but gives you the ability to enter an offset that will provide a more accurate display temperature on the controller compared to the lower cooking grate level temperature. By default, the controller is displaying the temperatures at the lower cooking grate level and not the ambient temperature inside the chamber. NEVER change the calibration of the controller with food in the cooker, as calibration is a function that requires a specific set of parameters to be followed when the cooker is empty.

The following steps will instruct you on inputting an offset into your ACS controller. We recommend inputting an offset into the controller ONLY after completing the factory temp test.

To calculate the offset after performing the test, input half of the average difference between the probes and the controller display. The goal is to tell the controller that the actual lower grate temperature differs from the temperature shown on the display. The offset creates an adjustment to bring the display temperature closer to the actual temperature. Example: If you find the probes average 20 degrees hotter than the display, you will enter a +10 degree offset.

If you would like assistance with determining the offset for your cooker, please share the test session with Customer Service by emailing customerservice@yodersmokers.com once the test is complete.

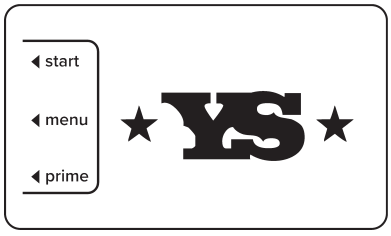

1. Power on the controller and wait for the main menu to show. Then press the button next to “Menu” on the controller.

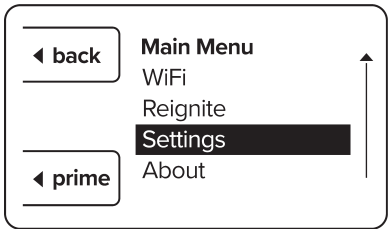

2. Rotate the selector knob clockwise to highlight the “Settings” option then press the selector knob.

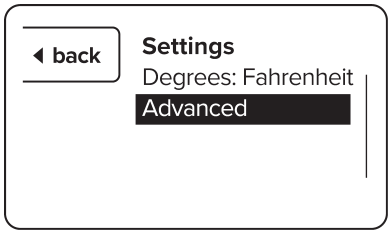

3. Rotate the selector knob clockwise to highlight "Advanced" then press the selector knob to continue.

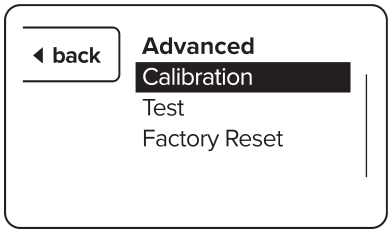

4. Press the selector knob when "Calibration" is highlighted.

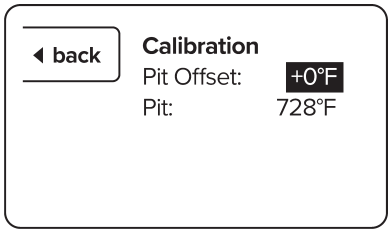

5. You will see the Pit Offset temperature is highlighted. To make the changes, press the selector knob.

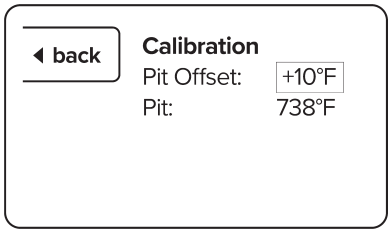

6. You will no longer see the temperature highlighted. Rotate the selector knob clockwise to increase the offset and counterclockwise to decrease the offset. Press the selector knob once you have the desired temperature offset to confirm the changes.

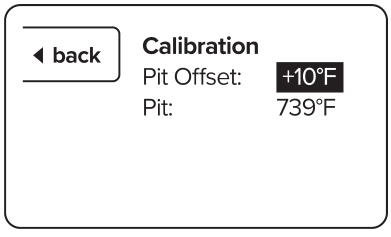

7. The offset temperature will be highlighted to indicate that it is entered. You may now press the back button multiple times to return to the main screen.

S SERIES®
★YODER SMOKERS★

S SERIES®
★YODER SMOKERS★

S SERIES®
★YODER SMOKERS★

S SERIES®
★YODER SMOKERS★

ITEM #	PART #	DESCRIPTION	QTY.
1	90737	STAINLESS HINGE	2
2	1024X12FHMSSS	FLATHEAD MACHINE SCREW, STAINLESS 10-24 X 1/2	8
3	1024WHN	12-24 WHIZ NUT	8
4	24497	SERIAL PLATE	1
5	236-2489-02	POP RIVET	4
6	W90796	YS480s CHAMBER LID	1
7	41435	HANDLE ROD	1
8	22866	HANDLE SPRING	2
9	22924	3/8" PUSH CAP	2
10	90901	UNIVERSAL CHROME COOKING GRATE 8"	4
11	90938	TWO PIECE HEAT DIFFUSER	1
12	W90386	YS640 SECOND SHELF WELDMENT	1
13	90377	THUMBSCREW	2
14	W90067	CHIMNEY	1
15	1420X12SHCSSS	SOCKET HEAD SCREW ¼-20 X 12"	1
16	1420WHN	¼-20 WHIZ NUT	3
17	90117	HOPPER MOUNTING BRACKET	1
18	1420X58WHB	¼-20 X 5/8" WHIZ BOLT	2
19	90460	YS GALVANIZED BUCKET	1
20	W90794	YS480 CHAMBER	1
21	90197	YS640/YS480 CHROME WIRE SIDE SHELF	1
22	90193	YS640 CHROME WIRE FRONT SHELF	1
23	24712	COUNTERWEIGHT BUMPER	2
24	818X34PHSDS	SELF DRILLING SCREW FOR COUNTERWEIGHT BUMPER	2
25	1024X34BHCSSS	BUTTON HEAD CAP SCREW, STAINLESS 10-24 X 34" LONG	1
26	91742	#10 ¾" OD .030 THICK FLAT WASHER STAINLESS	1
27	91762	#10 5/16" OD 1/8" LONG SPACER	2
28	91741	PROBE PORT DOOR STAINLESS	2
29	91777	SILICONE PROBE PORT PLUG	1
30	1024FLN	10-24 FLANGE LOCK NUT	1
31	92001	GASKET 21.5" LONG	4
32	92301	BOLT IN DIFFUSER SUPPORT	1
33	92302	BOLT IN GREASE DRAING TRAY	1
34	1420X34CB	¼-20 X 3/4" CARRIAGE BOLT	2

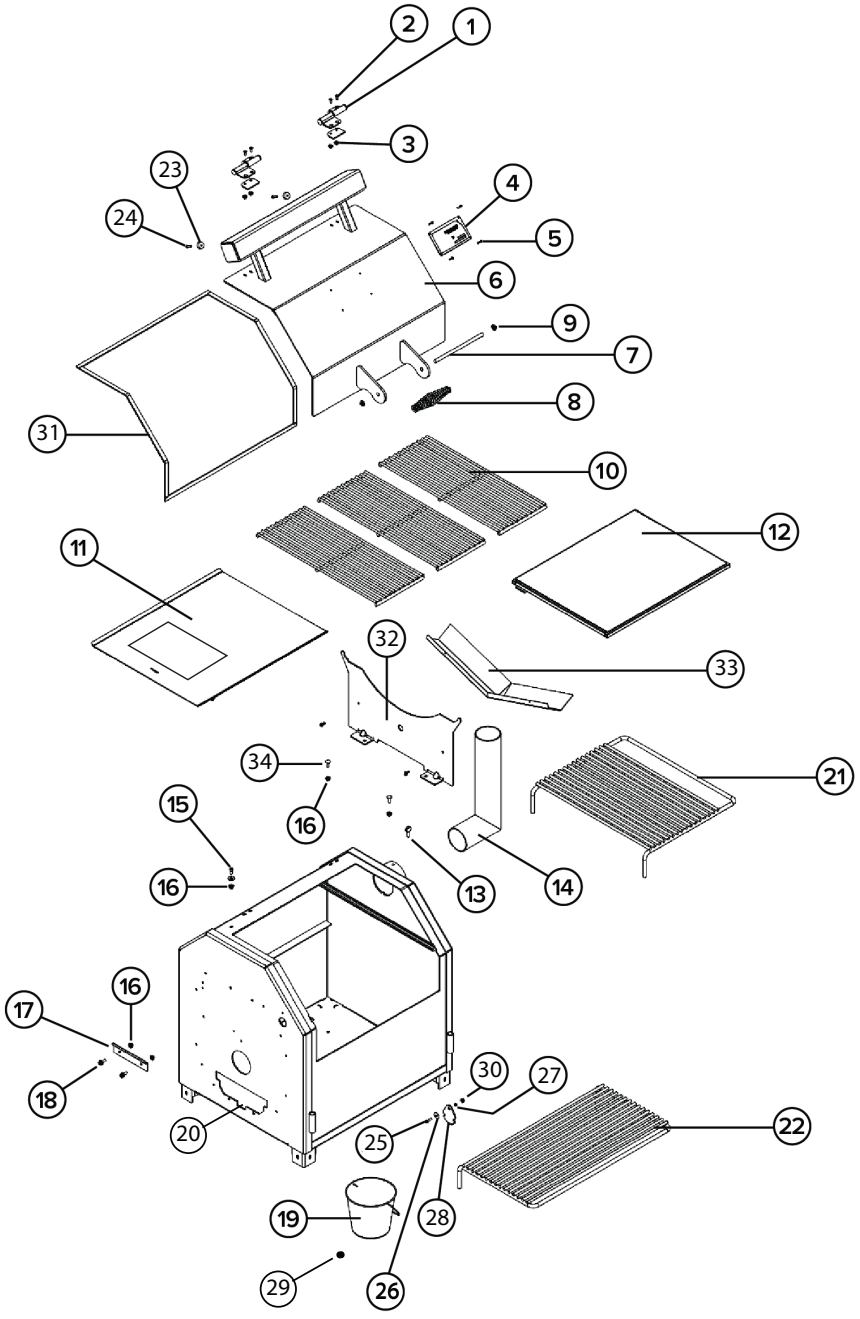
1
2
3
4
5
6
7
8
9
10
11
12
13
14
15
16
16
16
17
18
19
20
21
22
23
24
25
26
27
28
29
30
31
32
33
34

ITEM #	PART #	DESCRIPTION	QTY.
1	1420WHN	¼-20 WHIZ NUT	1
2	10X34HHSDS	HEX HEAD SELF DRILLING SCREW	5
3	1420X1HB	HEX BOLT ¼-20 X 1" LONG	1
4	91713	STAINLESS AUGER COVER BRACKET	1
5	W90811	STAINLESS FIREPOT	1
6	92401	STAINLESS REINFORCED BURN GRATE	1
7	A92311	CERAMIC IGNITER ASSEMBLY	1
8	A93011	PT-1000 PROBE	1
9	92271	STAINLESS PROBE WIRE COVER	1

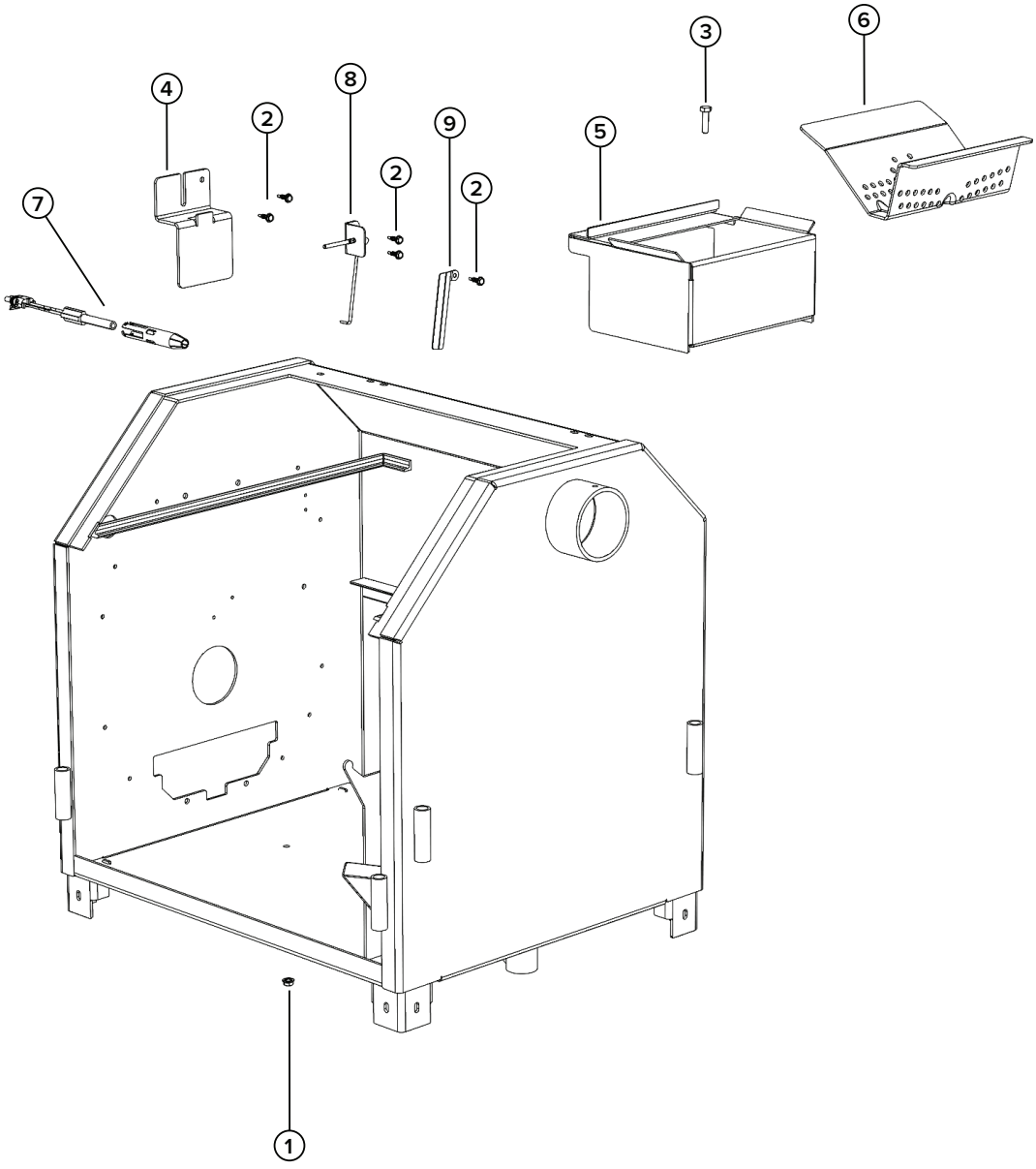
1
2
2
2
3
4
5
6
7
8
9

ITEM #	PART #	DESCRIPTION	QTY.
1	A92473	HOPPER ASSEMBLY, YS480s/YS640s WITH ACS	1
2	10X34HHSDS	SCREW, HEX HEAD, SELF DRILLING 10 x 3/4	10
3	1420X12HHSTS	SCREW, SLOTTED, HEX HEAD, SELF TAPPING, 1/4-20 x 2	2

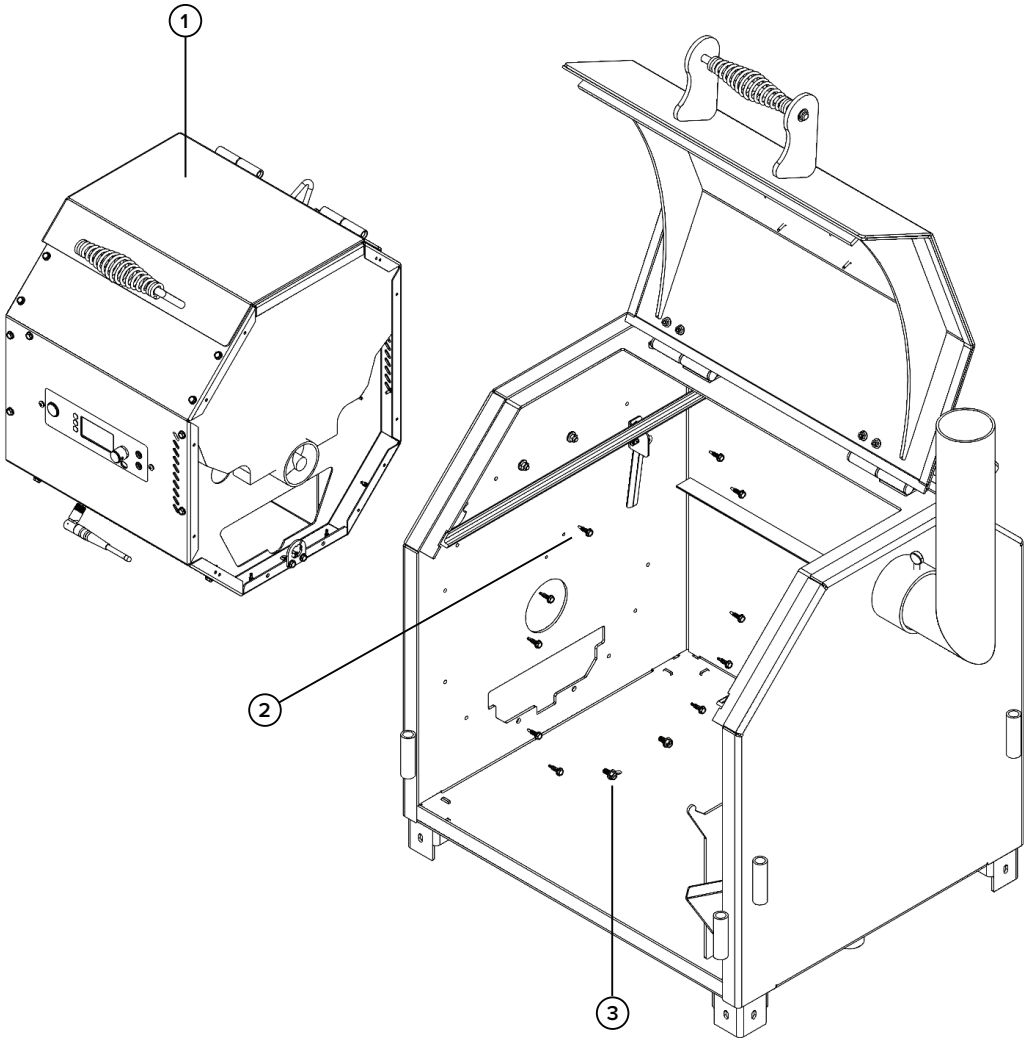
1
2
3

ITEM #	PART #	DESCRIPTION	QTY.
1	24640	3” CASTER WHEEL	2
2	1420HNNL	1/4-20 NYLOCK NUT	16
3	3816HNNL	3/8-16 NYLOCK NUT	2
4	1420X58WHB	1/4-20 x 5/8” LONG BOLT	16
5	701-102-02	PIN	2
6	90398	AXLE	2
7	1016X38HHSMS	HEX HEAD SLOTTED SHEET METAL SCREW	16
8	90093LFP	YS 480s BOTTOM SHELF	1
9	W90786	RIGHT FRONT LEG (D)	1
10	W90784	LEFT FRONT LEG (C)	1
11	24252	8” WHEEL	2
12	90092LFP	YS480s LONG SKIRT	2
13	90165LFP	SIDE SKIRT W/ YODER SMOKERS LOGO	2
14	W90782	REAR LEG (CASTER) (E)	2

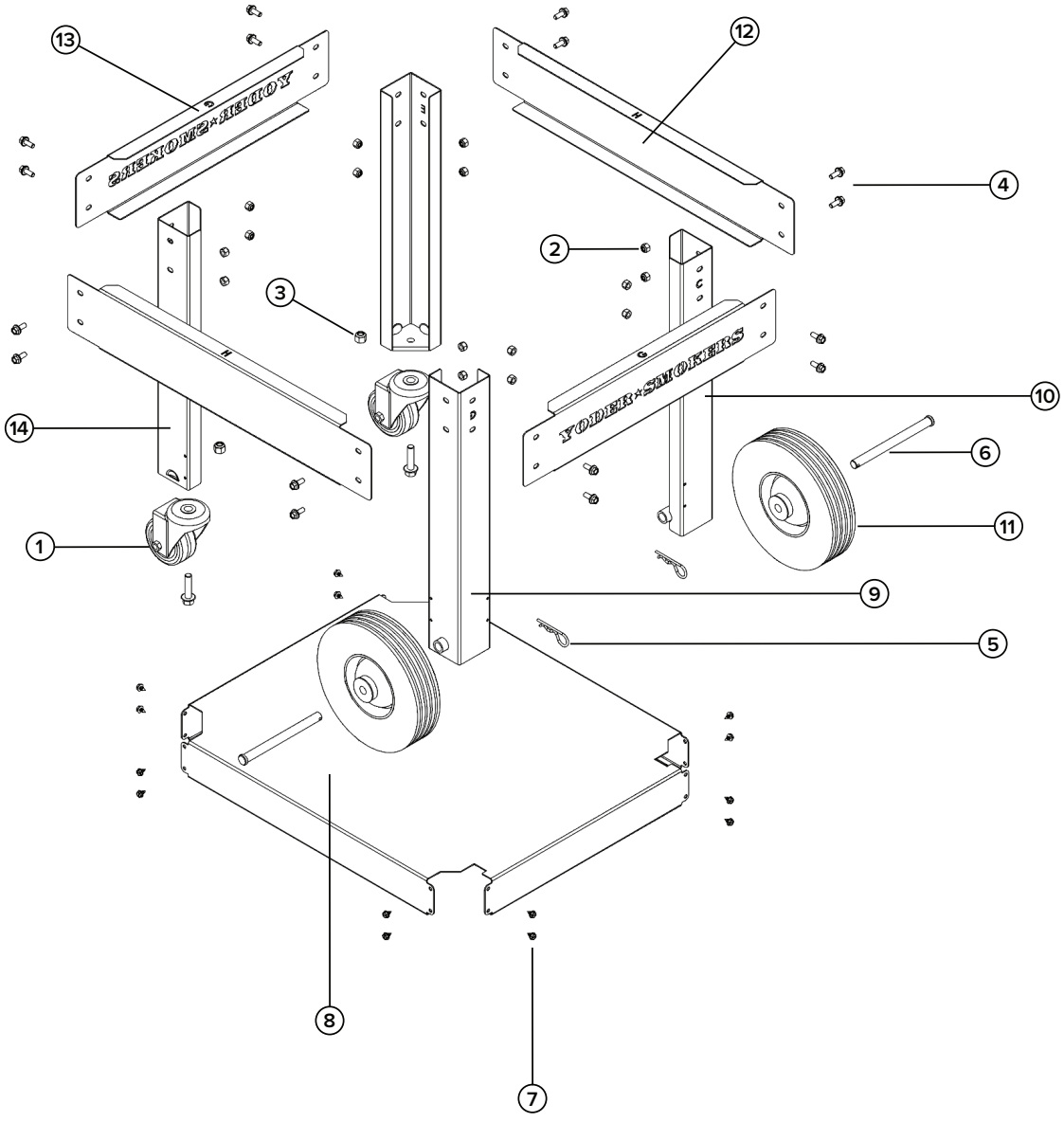
13
12
4
2
3
10
14
6
1
11
9
5
8
7

ITEM #	PART #	DESCRIPTION	QTY.
1	A90493	YS480s CHAMBER ASSEMBLY	1
2	W90544	YS480s COMP CART BASE WELDMENT	1
3	24625	8” CASTER WHEEL, RIGID	2
4	24626	8” CASTER WHEEL, SWIVEL	2
5	3816X1FHB	FLANGE HEAD BOLT 3/8-16 X 1” LONG	16
6	3816HNNL	3/8-16 NYLOCK NUT	16
7	90527	YODER SMOKERS COMP CART SIGN	2
8	1420X12BHCSSS	BUTTON HEAD CAP SCREW, STAINLESS 1/4-20 x 1/2”	8
9	1420X1FHB	FLANGE HEAD BOLT 1/4-20 x 1” LONG	8
10	1420HNNL	1/4-20 NYLOCK NUT	16
11	91434	COMP CART WIRE HARNESS EXTENSION	1
12	632X38MS	PHILLIPS HEAD MACHINE SCREW 6-32 x 3/8” LONG	2
13	632HN	6-32 HEX NUT	2
14	A92480	STAINLESS FRONT SHELF YS480s	1
15	A92478	STAINLESS SIDE SHELF YS480s	1
16	W90386	YS480s SECOND SHELF WELDMENT	1
17	90460	YS GALVANIZED BUCKET 1-1/4 QT.	1

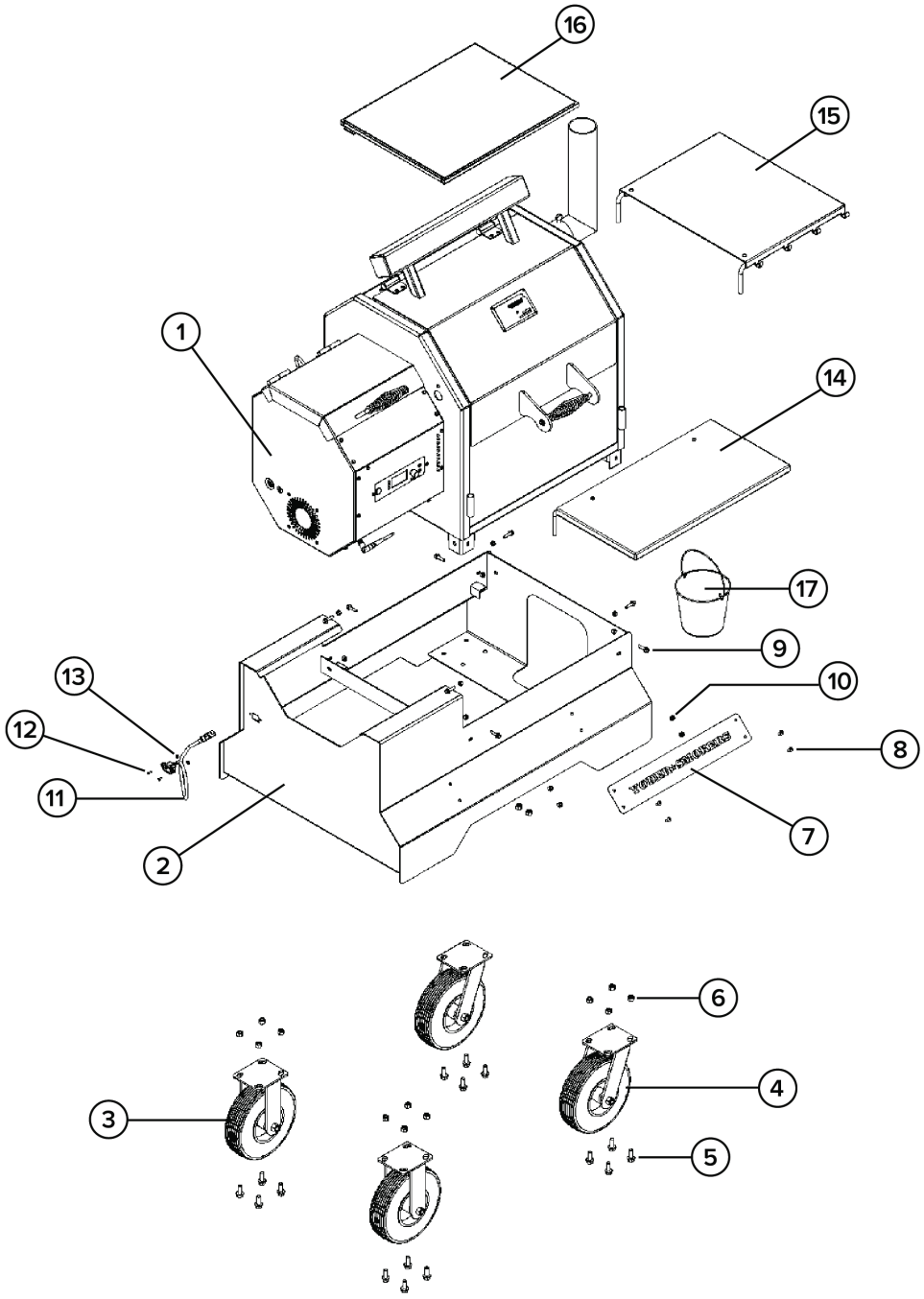
16
15
1
14
17
9
13
10
12
8
11
7
2
6
3
4
5

COMPLETE HOPPER ASSEMBLY

ITEM #	PART #	DESCRIPTION	QTY.
1	90101	HOPPER FRONT PANEL	1
2	90102	HOPPER BULKHEAD MOUNT	1
3	90106	HOPPER FAN END PANEL	1
4	W90791	STAINLESS HOPPER	1
5	A91999	AUGER BUSHING ASSEMBLY	1
6	24673	CONTROLLER KNOB	1
7	W92017	AUGER WELDMENT	1
8	90027	AUGER ANTI-TORQUE PLATE	1
9	90001	AUGER MOTOR	1
10	90060	INNER FAN 115 CFM	1
11	1420X12SHCS	SOCKET HEAD CAP SCREW, 1/4-20 .05 LONG	1
12	10X34HHSDS	ADJUSTABLE DAMPER	33
13	A93159	CONTROLLER WTH BOX HARNESS	1
14	832X12PHMSP	SCREW, MACHINE, PAN HEAD, PHILLIPS, 8-32 x 1/2” LONG	2
15	516X12SHSB	SHOULDER BOLT, .313 x .50 SOCKET HEAD 1/4-20	1
16	51618X12SHSS	SOCKET HEAD SET SCREW, 5/16-18 x 1/2	1
17	1024X12HHSTS	HEX HEAD SELF TAPPING SCREW 10-24 X ½” LONG	2
18	22866	SPRING HANDLE	1
19	1420WHN	¼-20 WHIZ NUT	1
20	W90790	HOPPER BACK	1
21	W90788	HOPPER LID	1
22	90312	SOCKET, 15 AMP	1
23	632X38MS	ROUND HEAD MACHINE SCREW, 6/32 x 3/8 LONG	2
24	632HN	HEX NUT 6-32	2
25	832HN	HEX NUT 8-32	4
26	90413	FUSE 5 AMP	1
27	92095	FUSE HOLDER OUTER	1
28	92096	FUSE HOLDER INNER	1
29	W90553	FAN HOUSING	1
30	832X12MS	PHILLIPS HEAD MACHINE SCREW	4
31	90686	OUTER FAN 68 CFM	1
32	90893	FAN DIFFUSER	1
33	23985	VELCRO	1
34	90313	POWER CORD	1
35	90413	5 AMP FUSE	1
36	24714	WIFI ANTENNA EXTENSION CABLE	1
37	92194	IGNITER TUBE MOUNTING PLATE FOR CERAMIC IGNITER	4
38	92256	FAN ISOLATOR	1
39	1016X38HHTFS	HEX HEAD SLOTTED THREAD FORMING SCREW	6
40	1420X12SHCSSS	SOCKET HEAD CAP SCREW, STAINLESS	1
41	24678	WIFI ANTENNA	1
42	92315	HOPPER INSULATION	1

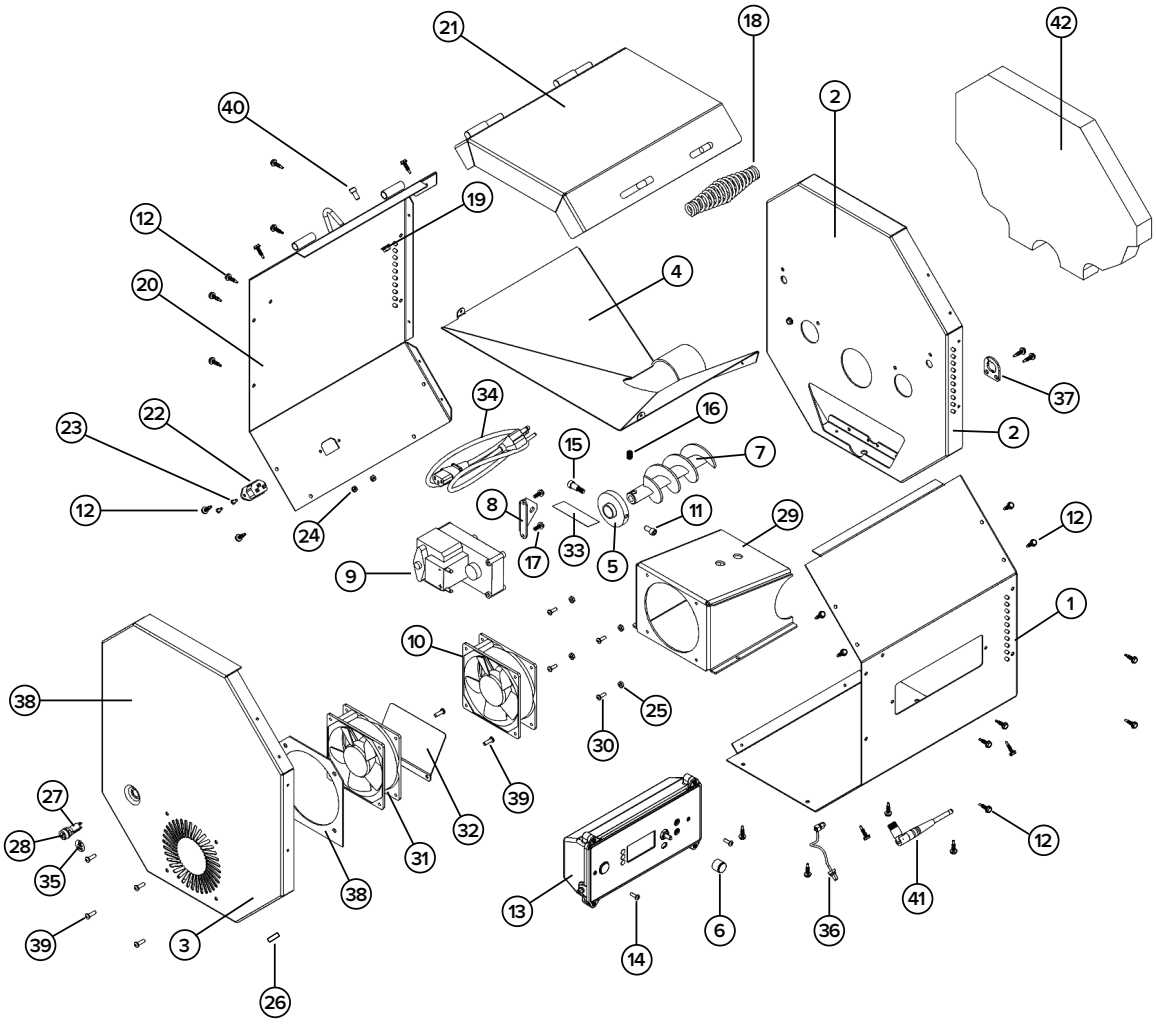
21
18
42
40
2
19
12
4
20
37
34
16
23
22
15
7
2
12
8
11
29
12
24
17
33
5
9
1
10
38
25
30
39
27
32
28
31
12
35
38
13
41
39
3
6
36
14
26

THE YODER SMOKERS
LIMITED WARRANTY

Yoder Smokers Pellet Cookers ("Yoder Smoker") are guaranteed to be free from defects in material and workmanship when utilized for residential, non-commercial use, and when the Yoder Smoker has been set up, cleaned, and maintained in accordance with factory recommendations. This Limited Warranty covers parts deemed defective by Yoder Smokers, Inc. (the "Company") only, and does not cover any labor costs for diagnosis, troubleshooting, removal, installation, export duties, or shipping, freight, or other transportation to or from the Company.

The Yoder Smoker cooker must be registered with the Company within 30 days of purchase for the warranty to be valid. Whether you register electronically or by mail, you should retain the sales receipt and other proof of original purchase, as this may be required for claims under this Limited Warranty. Please register electronically here: yodersmokers.com/warranty-registration-form.

THIS LIMITED WARRANTY COVERAGE INCLUDES:

The main cooking chamber is warrantied against burn through for ten years from the manufactured date of the Yoder Smoker, or from the original purchase date, with proof of purchase.

The electronic control system (ACS controller, thermocouple, auger motor, and fans) are warrantied for three years from the manufactured date of the Yoder Smoker, or from the original purchase date, with proof of purchase.

The ceramic igniter is warrantied for three years from the manufactured date of the Yoder Smoker, or from the original purchase date, with proof of purchase.

All other components not specifically listed above, are warrantied for six months from the manufactured date of the Yoder Smoker, or from the original purchase date, with proof of purchase.

Any warranty replacement component is warrantied for one year from the date of shipment. This would be any component that has been replaced after the original warranty period has expired.

REGISTER YOUR COOKER

www.yodersmokers.com/warranty-registration-form/ *or call 877-409-6337 Option 2.*

The Company's sole obligation under this Limited Warranty shall be to repair or replace, at its option, any part deemed defective upon examination by the Company, upon claims received by the Company during the specific warranty periods outlined above. The customer must obtain approval from the Company before performing any service or repair by submitting a warranty claim under this Limited Warranty. The Company is not obligated under this Limited Warranty following any unauthorized service or repair work and is not responsible for the charges of any repairs beyond repair or replacement, at its option, of covered warranty claims. Repair or replacement of any parts will not extend the original warranty coverage.

• This Limited Warranty is transferable for the duration of the specific warranty periods outlined above.
• To make a warranty claim under this Limited Warranty, the owner must notify the Company for troubleshooting, and subsequent instructions, as to service and replacement of defective part(s) before attempting repair of the Yoder Smoker.
• The model number, serial number, and manufacturer date of the Yoder Smoker must accompany any warranty request. For warranty claims made outside the warranty periods commence previously submitted to the Company.
• This Limited Warranty does not apply to damage caused by abuse or use of the product for purposes other than that for which it is designed. If damage is caused by lack of proper use, assembly, cleaning, maintenance, installation, accidents, natural disasters, by unauthorized third party attachments and/or modifications, by unauthorized service, or during shipment, this Limited Warranty is not applicable.
• The Limited Warranty is void on any Yoder Smoker being used in any commercial or food service setting (including but not limited to restaurant or catering use).
• This Limited Warranty does not cover damage from normal wear and tear from use of the Yoder Smoker (for example, scratches, dents, dings, and chipping) or changes in the appearance of the Yoder Smoker that do not affect its performance.
• This Yoder Smoker must be operated, cleaned, and maintained at all times in accordance with the instructions in the Owner's Manual. This Limited Warranty will not apply if your product has not been assembled, operated, cleaned, and maintained in strict accordance with the manufacturer's instructions, or placed in accordance with minimum clearances as listed in the Owner's Manual.
• A copy of the Owner's Manual may be found online at https//www.yodersmokers.com.
• Performance problems due to operator error will not be covered by the Limited Warranty.
• As this is a cooker/smoker, the interior may experience changes in the color of the surface finish. This is not a flaw and as such is not covered under this Limited Warranty.
• Burning anything other than premium food grade pellets as fuel for the Yoder Smoker shall void this Limited Warranty.
• There is no written or implied performance warranty on any Yoder Smoker, as the manufacturer has no control over the assembly, operation, cleaning, and maintenance or the type of fuel burned.
• High ambient temperatures, excessive humidity, chlorine, industrial fumes, fertilizers, lawn pesticides, acid, and salt are some of the substances that can affect metal coatings. For these reasons, the Limited Warranty DOES NOT COVER PAINT, RUST OR OXIDATION, unless there is a loss of structural integrity on the cooker's components during the specific warranty coverage period.
• The Company will not be responsible for performance issues caused by environmental conditions.
• The Company will not be responsible for performance issues caused by electrical power.
• Damage to painted surfaces caused by scratches, melted items, drips/spills, external scores, and residues left on these surfaces from the use of marinades, seasonings, oils, brines, abrasive cleaners, polishes, or other BBQ products is not covered in this Limited Warranty.
• Any modifications including holes, screws, and any other sheet metal changes to the product will void this Limited Warranty.
• You are responsible for any costs of shipping related to claims under this Limited Warranty. Original parts required by the Company to be returned must be returned prepaid.

There are no express warranties other than the limited warranties stated herein above. No warranties whether express or implied, including, but not limited to, any implied warranties of merchantability of fitness for a particular purpose shall extend beyond the respective warranty periods described above.

The Company shall not be liable for any direct, indirect, special, consequential, incidental, or punitive damages; lost profits or loss of use or interruption of business regardless of the form of action or theory of liability resulting from any defect in, or use of, any Yoder Smoker, accessories and/or heating elements. In no event shall the Company's obligations exceed the purchase price of the unit. This Limited Warranty gives the customer specific legal rights and the customer may have other rights which vary from state to state. In consideration of this Limited Warranty, the customer agrees that any dispute related to any Yoder Smoker, or this Limited Warranty, shall be conducted in Reno County, Kansas and subject to Kansas law.

THIS LIMITED WARRANTY GIVES YOU SPECIFIC RIGHTS WHICH MAY VARY FROM STATE TO STATE. THE LIMITED WARRANTY IS IN LIEU OF ALL OTHER WARRANTIES, STATUTORY OR OTHERWISE, EXPRESS OR IMPLIED, ALL OTHER REPRESENTATIONS MADE BY THE COMPANY OR ANY THIRD PARTY DISTRIBUTOR OR RETAILER AND ALL OTHER OBLIGATIONS OR LIABILITIES WITH RESPECT TO THE UNIT COVERED BY THIS LIMITED WARRANTY WHICH, AT THE TIME OF PURCHASE OR AT ANY TIME IN THE FUTURE, MAY BE MADE AGAINST THE COMPANY, ITS OFFICERS, DIRECTORS, EMPLOYEES, AND AGENTS. EXCEPT as expressly provided herein, THE COMPANY gives no other express or implied warranties relating to fitness for USE OF THE UNIT; merchantability of the UNIT, fitness for a particular purpose of the UNIT, quality of the UNIT; or condition of the UNIT. THE COMPANY'S obligations shall not exceed its obligation expressly set forth in THIS LIMITED WARRANTY.

For warranty claims, please verify you have registered your cooker within 30 days of purchase to validate your warranty. Contact Yoder Smokers Customer Service via email at customerservice@yodersmokers.com or by calling 877.409.6337, option 2, and include the model of your cooker, the serial number, the build date, your name, shipping address and contact phone number, and a detailed description of the issue or problem.

MADE™
HANDCRAFTED IN THE USA

COOKING CHAMBER	ACS CONTROLLER	CERAMIC IGNITER
10 YEARS	3 YEARS	3 YEARS

Your Yoder Smokers YS640 is fully backed by our exceptional customer support and warranties. The 10-gauge cooking body is warrantied for 10 years, the control system for 3 years, and the ceramic igniter for 3 years. Tires and casters are warrantied for 1 year against manufacturing defects. Register the warranty information online at yodersmokers.com

Firmware updates are offered to users via WiFi connection.
Visit the Yoder Smokers forum for product information, discussion and advice on products & accessories: community.yodersmokers.com

FOR PRODUCT SUPPORT:

CustomerService@YoderSmokers.com
877.409.6337 (OPTION 2)

YODER SMOKERS

PREMIUM GRILLS & SMOKERS

1816 E WASP RD. | HUTCHINSON, KS 67501 | 877.409.6337

YODERSMOKERS.COM

24-0213