Technical Manual

S1 Dome

GOZNEY®

US DOC-0480-03

Live-Fire cooking made easy.

Introduction

WARNING: If the information in these instructions is not followed exactly, a fire or explosion may result causing property damage, personal injury or death.

- Do not store or use gasoline or other flammable vapors and liquids in the vicinity of this or any other appliance. An L.P. cylinder not connected for use must not be stored in the vicinity of this or any other appliance.

- Post these instructions in a prominent location:

  What to do if you smell gas:

  - Do not try to light any appliance.
  - Do not touch any electrical switch.
  - Do not use any phone in your building.
  - Immediately call your gas supplier from a neighbor's phone. Follow the gas supplier's instructions.
  - If you cannot reach your gas supplier, call the fire department.
- Installation and service must be performed by a qualified installer, service agency or gas supplier.

WARNING: Improper installation, adjustment, alteration, service or maintenance can cause property damage, injury or death. Read the installation, operating and maintenance instructions thoroughly before installing or servicing this equipment.

This instruction manual contains important information necessary for the proper assembly and safe use of the appliance.

Read and follow all warnings and instructions before assembling and using the appliance. Follow all warnings and instructions when using the appliance. Keep this manual for future reference.

DANGER

If you smell gas:

Shut gas off to the appliance.

—

Extinguish any open flame.

—

If odor continues, keep away from the appliance and immediately call your gas supplier or fire department.

Contents

GENERAL ADVICE 8
PRODUCT OVERVIEW 10
GAS SPECIFICATION 12
1 OPERATION & INSTALLATION 15
SAFETY CONSIDERATIONS 16
FIRE 17
CARBON MONOXIDE 17
2 SETUP & ACCESSORIES 19
ADJUSTING THE STONES 20
MOVING THE OVEN 21
OVEN PLACEMENT 22
FLUE ASSEMBLY 24
DIGITAL TEMPERATURE DISPLAY 25
SET UP 26
DIGITAL TEMPERATURE DISPLAY TROUBLESHOOTING 27
E1 ERROR CODE 27
E3 ERROR CODE 27
OPTIONAL ACCESSORIES 28
ROPE SEALED DOOR 28
FLUE EXTENSION 28
DOME S1 MANTLE 29
NEAPOLITAN ARCH 29
DOME STAND 30
3 FIRING UP GAS 32
CONNECTING TO GAS 34
GAS SAFETY 35
INDOOR USE 37
SAFETY CONSIDERATIONS 38
INSTALLING THE IGNITER BATTERY 39
CONNECTING THE GAS HOSE 41
CLOCKWISE REGULATOR 42
TESTING FOR LEAKS 43
IGNITION 44
FIRST FIRING 45

TROUBLESHOOTING GAS BURNER 46
DISCONNECTING GAS 47
CLOCKWISE REGULATOR 47
4 GENERAL MAINTENANCE 49
MAINTENANCE 50
CLEANING THE VENTURI 50
CLEANING THE OVEN 51
INTERNAL 51
EXTERNAL 52
REPLACING THE PROBE 53

Dome S1 gets extremely hot and should not be used by children. Do not allow children near the device during or after operation. Dome S1 can stay hot for a few hours after use.

—

Do not use under any apartment or condominium balcony or deck.

—

Dome S1 is not intended for and should never be used as a heater.

—

Dome S1 has not been designed or intended to be used on a boat or within a recreational vehicle or any other form of confined area.

—

Assembly and operation of the oven should be carried out by a competent person.

—

The use of alcohol, prescription or non-prescription drugs may impair the consumers ability to assemble or operate the device safely.

—

Do not use any plastic or glass utensils within the oven.

—

Use heat-resistant gloves when operating the oven.

Do not insert items into Dome S1 that are bigger than the dimensions of the oven mouth.

Do not over fill Dome S1 or cover the burner.

—

Do not move Dome S1 whilst in operation.

—

Do not operate Dome S1 in strong winds. Winds can extinguish the flame and also cause irregular air pressure resulting in the flame and heat coming out the back of Dome S1. Use a wind break in open areas but keeping over 45cm away from the device.

—

Do not pour water on to the cooking stone as this will likely crack it and could be dangerous because of oil and grease.

—

Do not wear loose flammable clothing or sleeves near Dome S1.

—

Parts sealed by the manufacturer or the agent shall not be manipulated by the user.

—

Never burn wood in the oven.

—

If the appliance is installed in a room ensure there is adequate ventilation to prevent high carbon monoxide concentrations.

—

Never operate this appliance unattended.

—

Never operate this appliance within 25ft of any flammable liquid.

—

Do not fill the cooking vessel beyond the limitation of the door dimensions.

—

Heated liquids remain at scalding temperatures long after cooking process.

—

For indoor installations please speak to your local ventilation company for advice and follow the separate ventilation and extraction guidance available from Gozney.

—

Ensure the oven is placed on a flat surface.

—

Do not block perforations provide for ventilation and heat dissipation.

—

For replacement parts go to Gozney.com.

Product Overview - What's in the Box

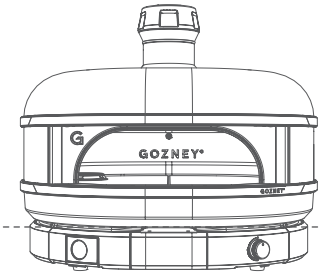

Oven

Dock

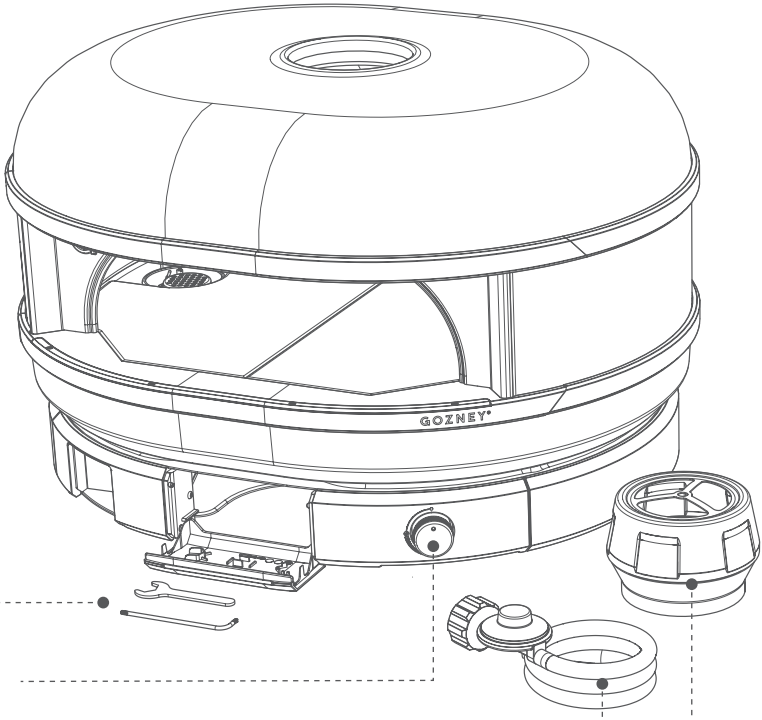

Wrench & Screwdriver

Gas Control Dial

Gas Hose & Regulator

Flue Top

Flue Cap

Flue Pipe

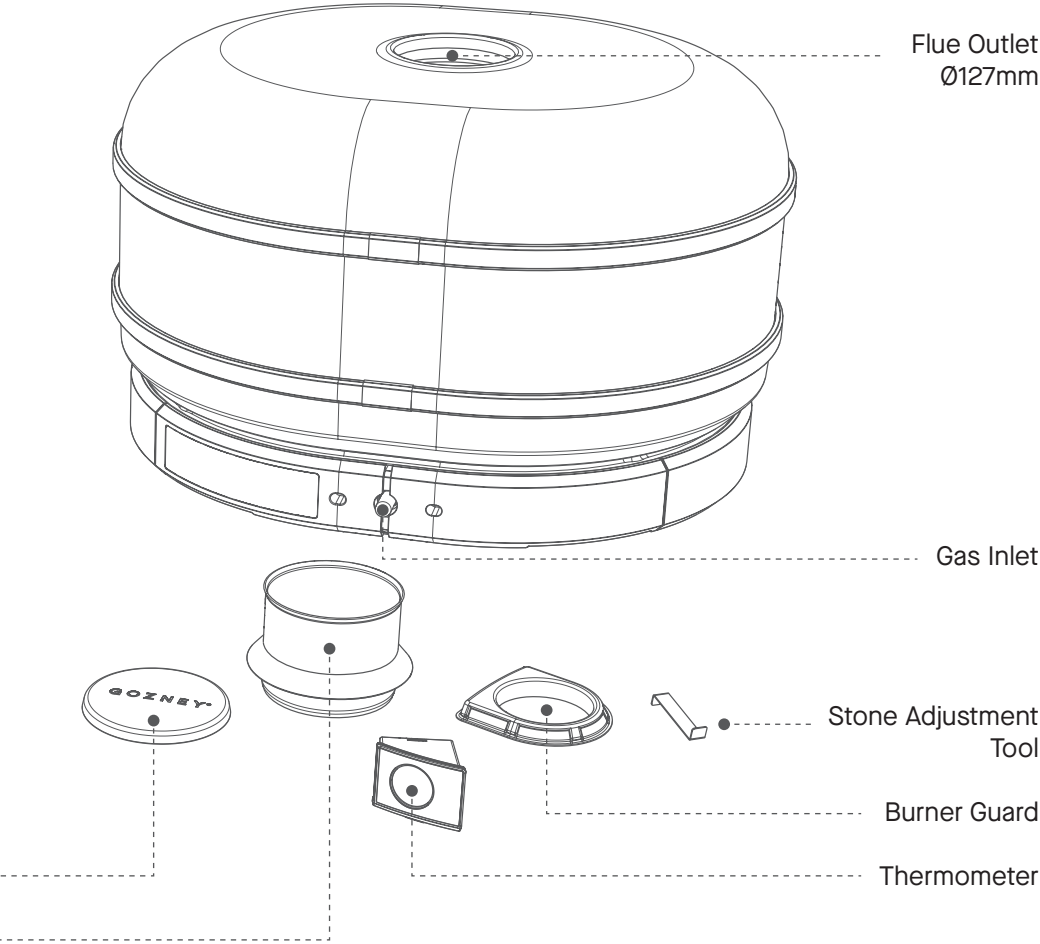
Flue Outlet
Ø127mm
Gas Inlet
GOZNEY
Stone Adjustment
Tool
Burner Guard
Thermometer

GAS SPECIFICATION

Gozney Limited, Units 18 & 19, Radar Way, Christchurch, Dorset, BH23 4FL UK.	
Appliance Name:	Gozney Dome S1
Model/Type No.:	4555-S1-02
Trade name:	Gozney Dome S1

LPG Configuration

Total nominal heat output for the gas burner	28000 BTU/HR
Injector Size	1.52mm
Gas Type	LPG
Gas Pressure	11 “W.C.

Read the instructions before using the appliance.
WARNING: accessible parts may be very hot. Keep young children away.
WARNING! Do not use spirit or petrol for lighting or re-lighting!

This section details the correct operation and install of a Gozney Dome S1.

1

Operation & Installation

SAFETY CONSIDERATIONS

This appliance must be installed on a secure level base prior to use.

WARNING: This appliance will become very hot, do not move it during operation.

WARNING: Keep away from children and pets.

Do not use the oven in enclosed areas. The Dome S1 unit and the burner must always be well ventilated.

—

Do not use plastic or glass utensils inside the Dome S1.

—

Do not move or leave the Dome S1 unattended whilst in use.

—

Do not operate Dome S1 in strong winds. Wind can extinguish flame.

—

Do not spill or pour water onto the cooking floor. This is dangerous and can crack the stone.

—

Do not wear flammable loose garments or sleeves.

—

Do not cover oven mouth when there is an active flame, this will cause damage to the oven.

—

This oven is not intended to be installed in or on recreational vehicles.

—

Product may contain sharp edges! Please use caution.

—

The oven can become very hot. Do not use the accessory hatch when the oven is in operation.

WARNING: Contact your local municipality for any building codes applicable to the use, installation and operation of outdoor barbecue appliances.

Outdoor installations must conform to local codes or, in the absence of local codes, with the following standards:

National Fuel Gas Code - ANSI Z223.1/ NFPA 54, or the Natural Gas and Propane Installation Code - CSA B149.1, or the Propane Storage and Handling Code - CSA B149.2

Spanner tighten all gas fittings as per instructions. Do not modify the appliance. Parts sealed by the manufacturer or the company shall not be manipulated.

FIRE

Most fires are caused by a build up of grease, or (if using gas) an improper gas connection. In the event of a fire ensure all people and pets are kept as far away as possible.

Use a fire extinguisher if possible, but if water is the only fire retardant available, thoroughly soak the area around the appliance. When spraying water on the Dome S1 itself, do not use a strong jet of water, as this may cause splashing of burning grease, resulting in a further spreading of the fire.

CARBON MONOXIDE

Carbon Monoxide is a highly poisonous gas which can be produced when the device isn't receiving enough ventilation.

We therefore recommend using the gas burners in a well ventilated area away from direct wind and to never cover the oven mouth when there is an open flame present.

It is difficult to know if your device is producing Carbon Monoxide as it is an odorless and colorless gas.

It can, however cause these symptoms when you are exposed to it:

- Tightness across the forehead
- Headache
- Weakness
- Dizziness
- Nausea
- Vomiting
- Coma, intermittent convulsions
- Depressed heart action, slowed respiration

If the exposure has been severe it may cause death.

Please follow local regulations and install a Co alarm if necessary.

This section details the set up of the oven and the accessories included with your Dome S1.

2

Setup
& Accessories

Adjusting The Stones

Before using Dome S1 it is important that the four blue stone retention wedges and other packaging inside of the oven are removed.

The removable stone design of the Dome S1 means that they are not fixed inside the oven and as such can shift backwards during transport. If there is a large visible gap at the front of the stones, you can use the included stone adjustment tool to hook the back of the stone and pull it forward.

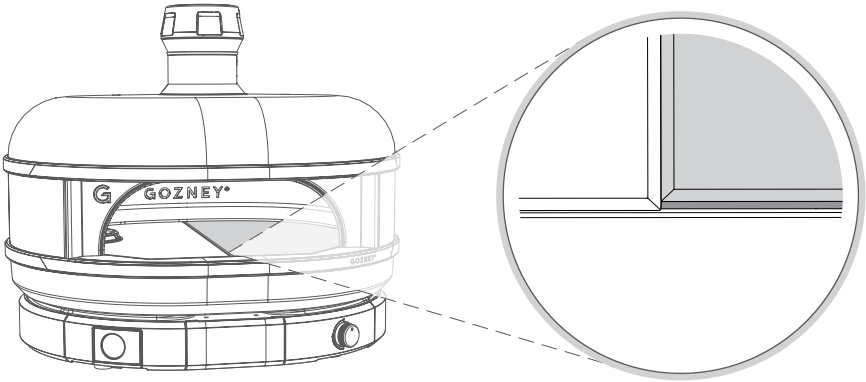

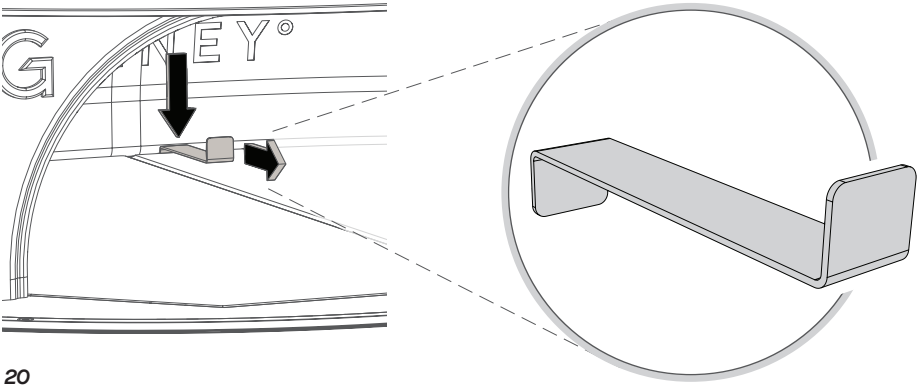

Moving the Oven

The lifting straps located on the bottom of the oven are only suitable for single use. Please remove them once the oven is located to its final location and use hand holds below.

Do not move Dome S1 whilst in operation or when it is still hot.

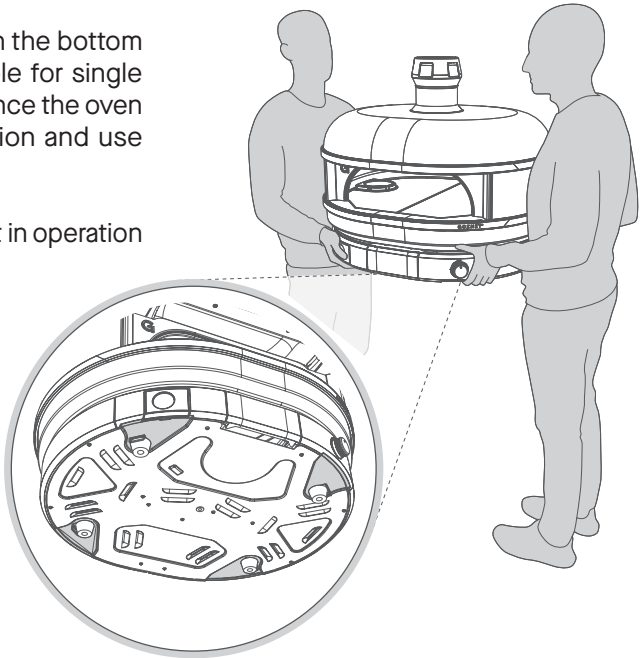

Never attempt to move the oven on your own. Two people should pick up the oven lifting from under the rounded ends of the oven, do not use the mouth of the oven as a lifting point.

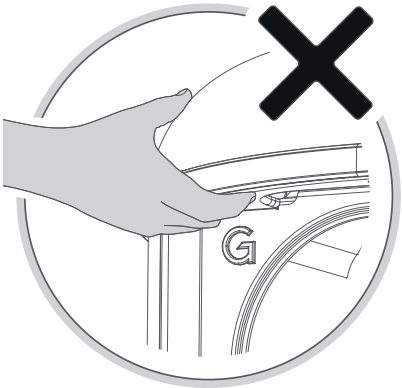

Remove anything loose and all transit packaging in the oven before moving.

Always plan the route you are going to take, remove any obstacles on your path and ensure the oven will fit through the intended route.

Ensure the area you are moving the oven to fits with the guidelines on the following page.

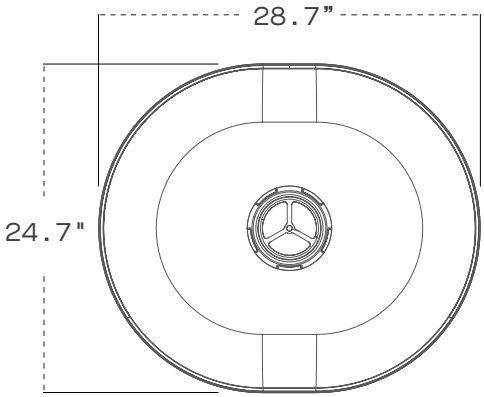

OVEN PLACEMENT

When deciding where to place Dome S1 ensure the area is large enough to accommodate the oven with 2” (50mm) around the base of the dock for air intake. It is important nothing is blocking the meshed panels as this will affect the performance of Dome S1.

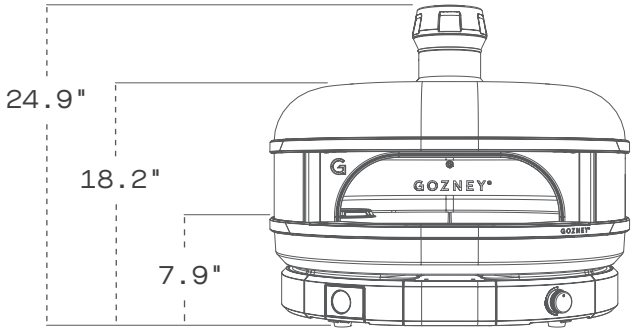

WARNING

When placing your oven it is important to maintain proper clearances from combustible construction. Ensure Dome S1 has 1ft clearance (back and sides) and 3ft 4” clearance (front) from any combustible construction.

Under no circumstances is the oven to be placed under or on top of any combustible structure.

Always keep the area around the oven clear of any combustible materials, gasoline and other flammable vapors and liquids.

We recommend the height of the floor to be around the level of the bottom of the users elbow (usually around 3ft 11” from the ground)

Ensure the surface the oven is being placed on is completely level, stable and capable of easily holding the weight of the oven - 130lb.

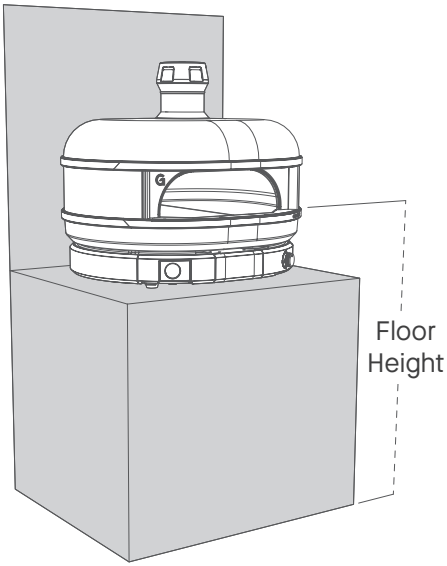

WARNING

Never operate the oven in high winds or if the wind is blowing into the oven mouth.

Wind should be taken into consideration when choosing a location. The oven should be orientated so that the mouth is facing away from the wind. Avoid using the oven in windy conditions, it is important to have wind breaks situated around the oven to stop the wind from blowing the flame down into the dock. If you see fire coming from the dock. Turn the oven off from either the gas bottle or control knob. Never operate the oven in high winds.

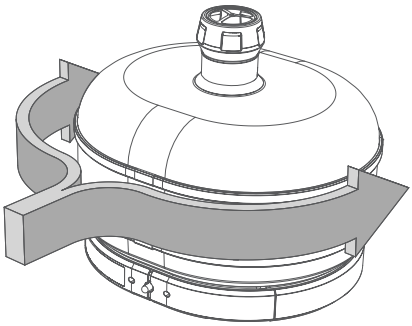

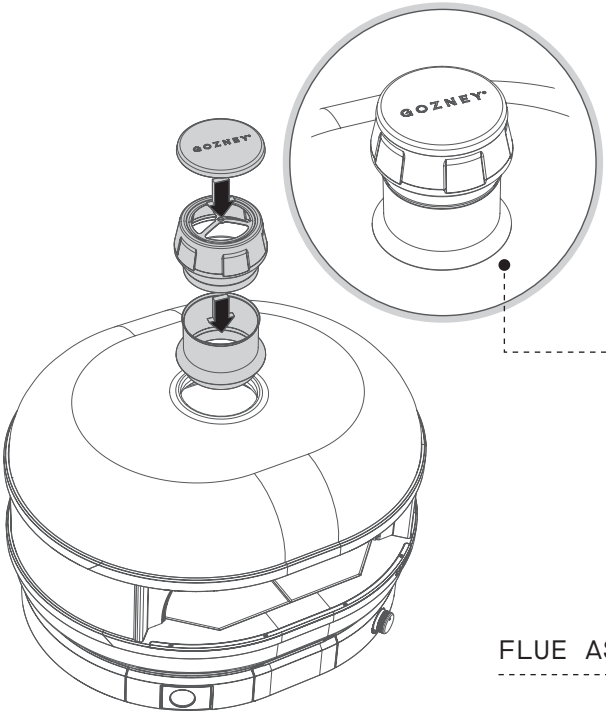

The flue is designed to have a rain guard which has a 1/4 inch gap from the Dome S1.

FLUE ASSEMBLY

The rain cap prevents moisture from getting into the oven and should only be used when the oven is cooled and not in use. Ensure rain cap is removed before using appliance.

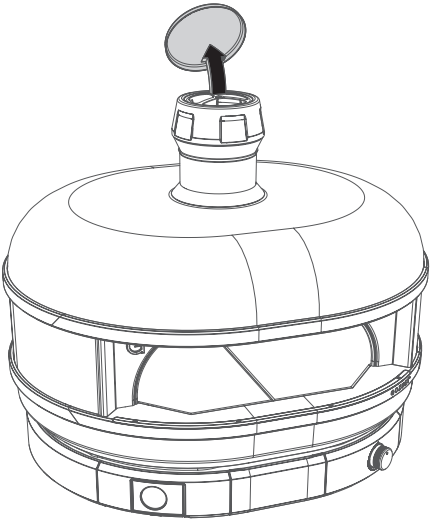

WARNING

Never leave the flue cap on when the oven is in use.

Digital Temperature Display

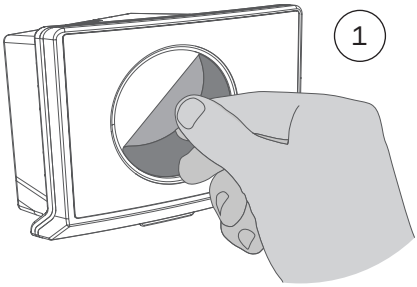

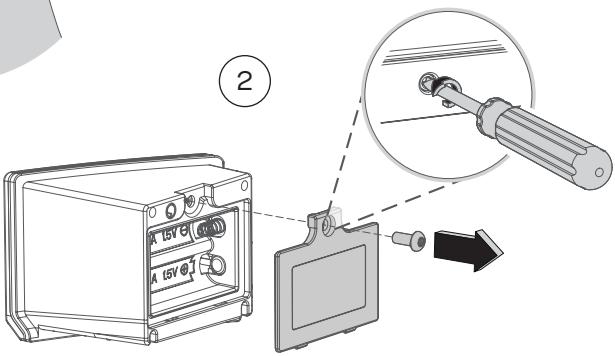

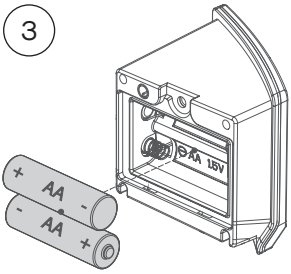

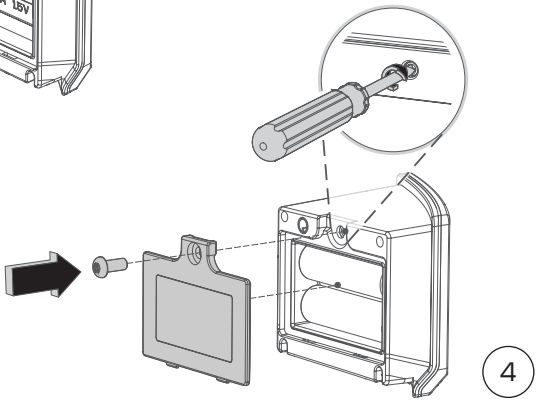

SET UP

After installing the batteries hold the power button down until the display turns on. Find the sensors jack by removing the plastic cap and plug it into the rear of the display, the screen will then show the temperature from within the oven.

The Digital Temperature Display is held in place by magnets.

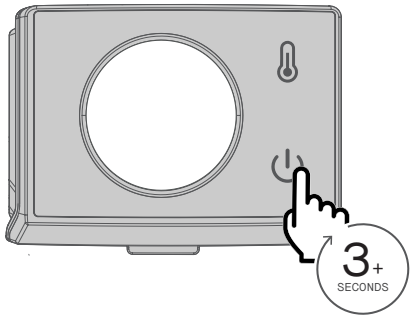

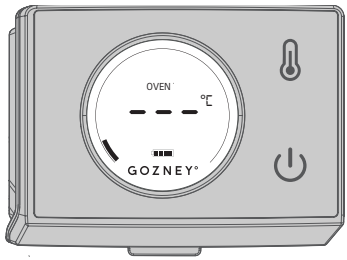

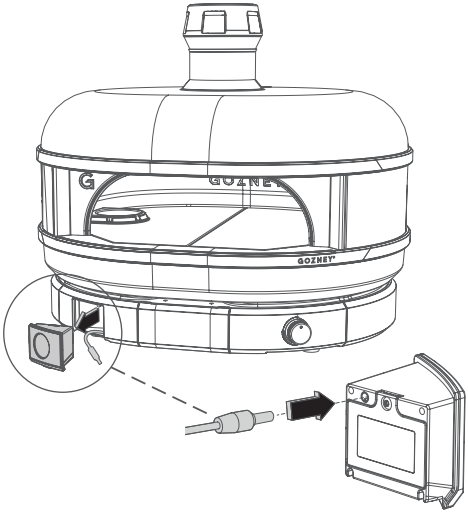

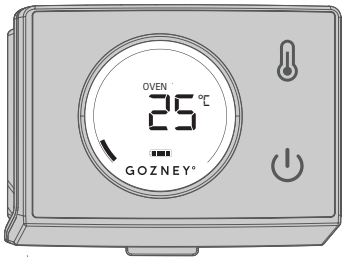

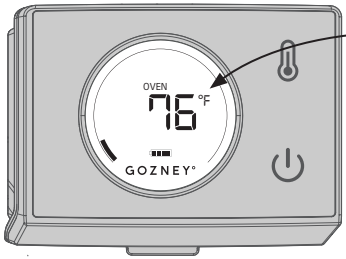

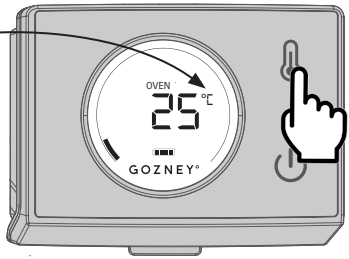

Digital Temperature Display Troubleshooting

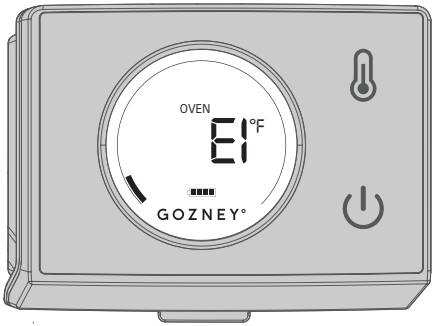

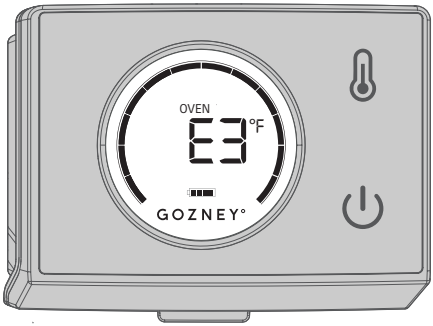

E1 ERROR CODE

If the thermometer is displaying an error code E1. This is caused by either:

1) A loose connection where the jack plug connects to the thermometer. Please ensure the jack plug is pushed fully in to the socket on the back of the thermometer.

2) Damage to the probe. The probe may need replacing. Please refer to maintenance instructions at the end of the manual.

E3 ERROR CODE

If the thermometer is displaying an error code E3. This is caused by the oven probe exceeding temperatures of 700°C/ 1292°F. Running the oven above this temperature may damage the unit.

To resolve this turn the gas burner off and let the oven cool naturally.

Do not try to rapidly cool the oven. This may crack the stone floor or cause stress damage to the oven.

Optional Accessories

Not included and must be purchased separately.

ROPE SEALED DOOR

The Rope Sealed Door will help you create the perfect cooking environment for baking, smoking or slow roasting over long periods.

With its adjustable vents you'll be able to control the temperature in the oven.

For more details visit the Gozney website. www.gozney.com.

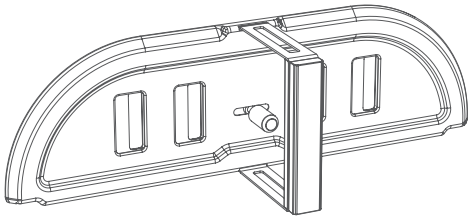

WARNING

Never use the door when the gas burner is lit. Always make sure the gas flame is extinguished and the gas dial is in the off position before installing the door.

FLUE EXTENSION

The Flue Extension will improve the efficiency of your oven and help reduce soot build-up around the mouth arch and within the oven.

For more details visit the Gozney website. www.gozney.com.

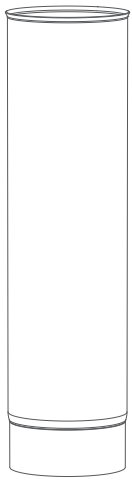

DOME S1 MANTLE

Whether you're cooking Neapolitan pizza, roasting vegetables or smoking meat, the Dome S1 Mantle makes moving food in or out of the oven simple.

Easily bolting onto the oven, the Mantle is made from ceramic coated, food grade aluminum alloy for extra heat and scratch resistance.

For more details visit the Gozney website. www.gozney.com.

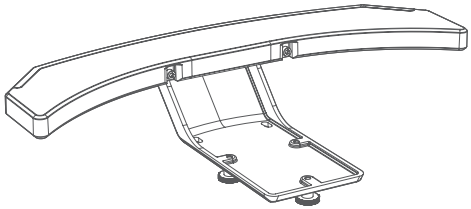

NEAPOLITAN ARCH

Master your leopard spotted crusts and take your pizza to the next level with this ceramic coated Neapolitan Arch. The Arch lowers the door height to enhance heat retention, creating the perfect environment for high-hydration doughs.

Includes Flue Extension.

For more details visit the Gozney website. www.gozney.com.

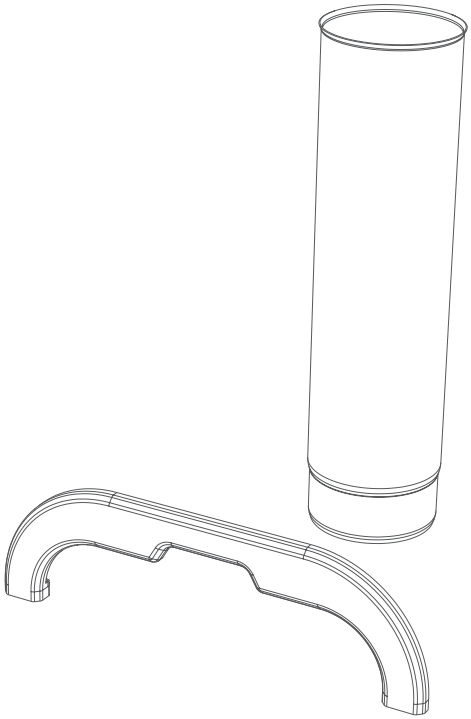

DOME STAND

The Dome Stand is simple to assemble, built to last and easy to maneuver. Making it easy to add your Dome to any backyard setup.

The Dome S1 is a perfect fit for a standard outdoor kitchen countertop. For a more flexible free-standing setup, the Dome Stand is for you.

For more details visit the Gozney website. www.gozney.com.

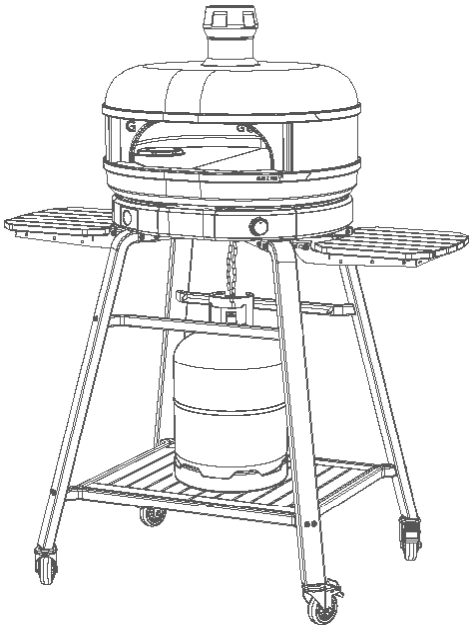

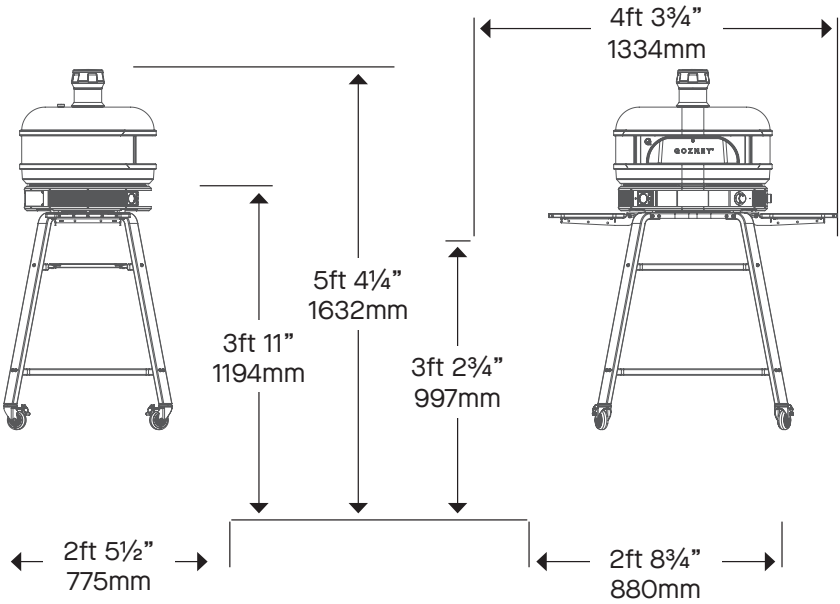

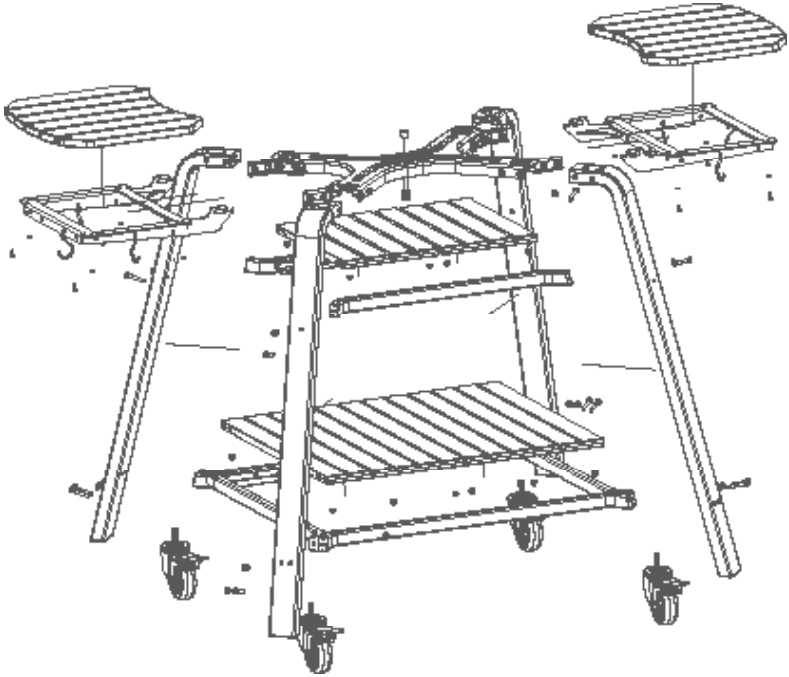

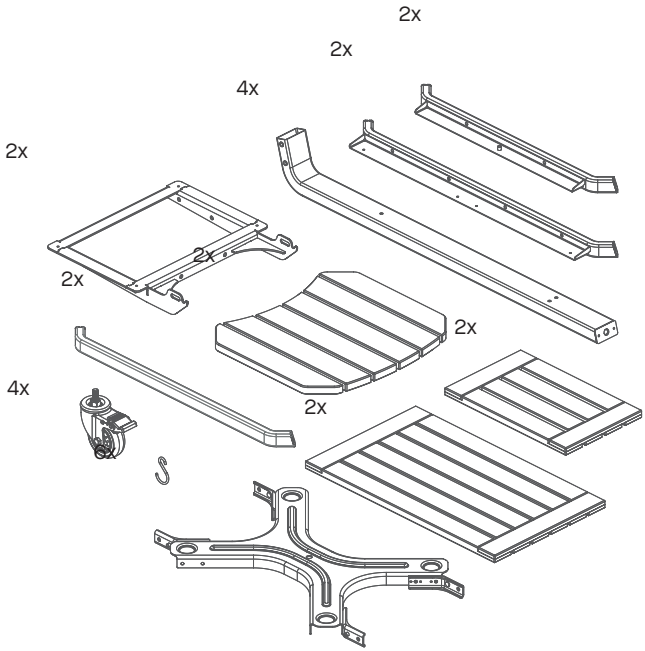
2x
2x
4x
2x
2x
2x
2x
2x
4x
2x

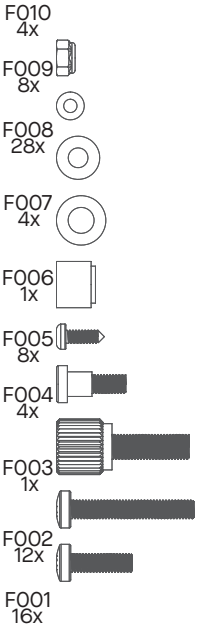
F010
4x
F009
8x
F008
28x
F007
4x
F006
1x
F005
8x
F004
4x
F003
1x
F002
12x
F001
16x

Your guide to burning gas.

3

Firing Up Gas

Connecting to Gas

Check that the gas you are using is specified on the data plate page.

The gas cylinder used must have a safety collar to protect the valve assembly. Do not use a cylinder that is rusty, dented or has a damaged valve.

We recommend using a 28lb gas bottle in conjunction with Dome S1.

Gas cylinder must be constructed and marked in accordance with the specifications for LPG cylinders, U.S. Department of Transportation (DOT) or the Standard for Cylinders, Spheres and Tubes for the Transportation of Dangerous Goods, CAN/CSA-B339 or subsequent.
Connect the regulator to the gas canister, following the instructions for your regulator accordingly. Do not force the regulator as this could damage the gas bottle.

If the gas grill is being supplied with propane from a portable cylinder, a regulator specified by the manufacturer must be used. The gas regulator must supply a pressure of 11 inches water column (0.39 PSI) to the gas grill and have a QCC1 type fitting.

Never fill the cylinder beyond 80 percent full. If the preceding information is not followed exactly, a fire causing death or serious injury may occur.

WARNING: If at any point you smell gas: Shut off the gas from the cylinder, turn off the switch on Dome S1 and extinguish any open flames.

If odor continues, move away from Dome S1 and gas supply then contact your gas supplier or fire service.

Ensure that the LPG cylinder or regulator valve is closed.
Do not store a spare LPG cylinder under or near this appliance.

Cylinder Connection: Ensure the gas regulator hose is kink free. Remove the cap or plug from the cylinder fuel valve. Insert the black QCC1 regulator nipple onto the QCC1 fuel valve. Hand tighten clockwise. Do not use tools. Leak test all joints prior to using the grill. A leak test must be performed annually and each time a cylinder is hooked up or if a part of the gas system is replaced.

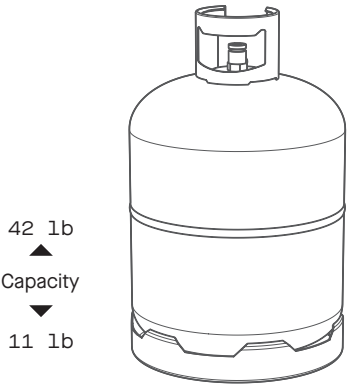

Gas Safety

Prior to use, check the oven, burner and venturi for blockages (e.g. food residue or insect nests - Wasps, Bees or Ants.) If an insect nest is found they can be dangerous and must be cleaned out thoroughly. Please refer to the cleaning and maintenance section for guidance.

Should the appliance extinguish for any reason, turn off the control knob and the cylinder gas valve. Wait 5 minutes before attempting to relight the appliance.

Some foods produce flammable fats and juices. Therefore Dome S1 oven should be attended at all times whilst being used. Damage caused by fat and grease fires is not covered by warranty. If a grease or fat fire should occur, immediately turn off burner knob and the gas cylinder valve until the fire is out. Remove all food from the appliance.

A leak test must be carried out prior to using the appliance for the first time and whenever the gas cylinder is refilled or whenever the gas hose and regulator have been disconnected from the gas cylinder or appliance.

Remove all packaging before attempting to light the gas burner.

Please take a moment to review all of the safety requirements before operating the appliance when using gas.

⚠
Remove the cap from the gas inlet before connecting the hose. Make sure it is free of damage and debris.

⚠
Do not disconnect any gas fittings while the appliance is operating.

⚠
Check all gas hose lines and connections for cuts, cracks and other damage before each use. If there is excessive abrasion or wear it just be replaced with a Gozney approved hose assembly before use.

⚠
Gas cylinders must not be stored in enclosed areas.

⚠
Keep the fuel supply hose away from heated surfaces or direct sunlight.

⚠
Do not use any additional flammable substance whilst operating with gas.

⚠

Do not touch! Dome S1 can get extremely hot when in operation. Be sure to wear protective gloves when operating the oven.

⚠

Keep the cylinder outdoors in its upright position.

⚠

Do not connect multiple gas canisters to Dome S1 or store a spare within the same vicinity.

⚠

Do not position the gas canister under the oven.

⚠

Never use a naked flame to check for gas leaks.

⚠

National requirements state how often to replace the hose. Please review this for your area.

⚠

Make sure the flexible tube is not twisting when the appliance is in operation.

⚠

During any pressure testing of the gas system at test pressures in excess of 0.5 PSI (3.5 KPA), the shut-off valve must be disconnected from the gas supply piping system.

⚠

NEVER cover slots, holes, or passages in the oven bottom or cover an entire dock with material such as aluminum foil. Doing so blocks air flow through the oven and may cause carbon monoxide poisoning. Aluminum foil linings may trap heat causing a fire hazard.

⚠

The deck/stone cooking surface of the oven is intended for cooking pizza and bread products only.

⚠

The installation of your oven must conform with local codes or, in the absence of local codes, with the National Fuel Gas Code, ANSI Z223.1/NFPA 54 or, in Canada, the Natural Gas and Propane Installation Code, CSA B149.1.

⚠ WARNING

NEVER user this appliance as a space heater to heat or warm the room. Doing so may result in carbon monoxide poisoning and overheating of the oven.

⚠

Do not use the door when the gas burner is running. Never cover the mouth of the oven when the gas burner is in use.

⚠

Storage cabinets are not permitted above the oven.

⚠

Do not use the oven cooking area as storage.

Indoor Use

⚠

For indoor LPG or Natural gas installations a qualified gas engineer will need to be called to install the appliance to national and local codes.

⚠

These appliances are to be installed with sufficient ventilation to prevent the occurrence of unacceptable concentrations of substances harmful to health in the room in which they are installed.

⚠

This appliance is not connected to a combustion products evacuation device. It shall be installed and connected in accordance with current installation regulations. Particular attention shall be given to the relevant requirements regarding ventilation. - Seek advice from your local professional ventilation company.

⚠

CAUTION: The use of a gas cooking appliance results in the production of heat, moisture and products of combustion in the room in which it is installed. Ensure that the kitchen is well ventilated especially when the appliance is in use: keep natural ventilation holes open or install a mechanical ventilation device (mechanical extractor hood).

⚠

It is important to service the oven extraction device regularly. Failure to do so may result in a fire. Contact your local professional ventilation company for more details.

Contact Gozney for more information on ventilation and installation

37

SAFETY CONSIDERATIONS

This appliance must be installed on a secure level base prior to use.

WARNING: This appliance will become very hot, do not move it during operation.

WARNING: Keep away from children and pets.

Do not use the oven in enclosed areas. The Dome S1 unit and the burner must always be well ventilated.

—

Do not use plastic or glass utensils inside the Dome.

—

Do not move or leave the Dome S1 unattended whilst in use.

—

Do not operate Dome S1 in strong winds. Wind can extinguish flame.

—

Do not spill or pour water onto the cooking floor. This is dangerous and can crack the stone.

—

Do not wear flammable loose garments or sleeves.

Do not cover oven mouth when there is an active flame, this will cause damage to the oven.

—

This oven is not intended to be installed in or on recreational vehicles.

—

Product may contain sharp edges! Please use caution.

WARNING: Contact your local municipality for any building codes applicable to the use, installation and operation of outdoor barbecue appliances.

Outdoor installations must conform to local codes or, in the absence of local codes, with the following standards:

National Fuel Gas Code - ANSI Z223.1/ NFPA 54, or the Natural Gas and Propane Installation Code - CSA B149.1, or the Propane Storage and Handling Code - CSA B149.2

Spanner tighten all gas fittings as per instructions. Do not modify the appliance. Parts sealed by the manufacturer or the company shall not be manipulated.

38

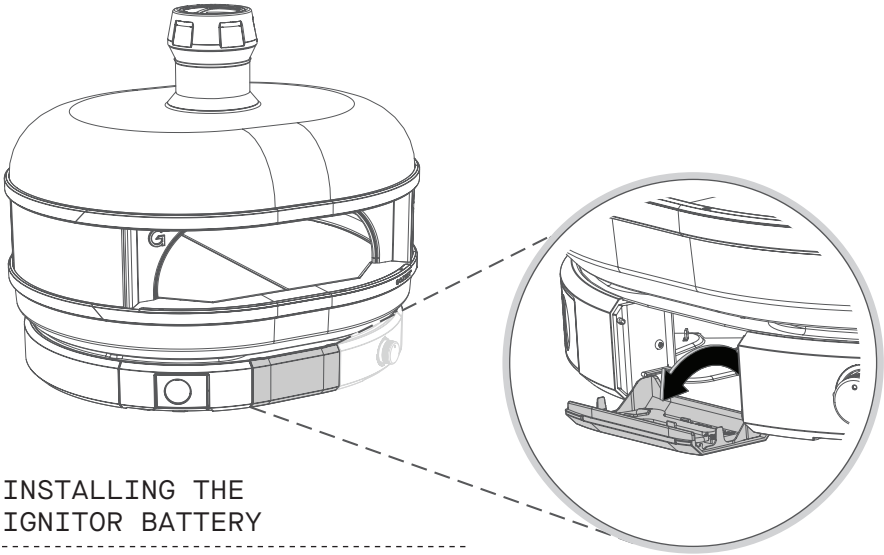

INSTALLING THE IGNITOR BATTERY

Before using the gas burner for the first time you'll need to install an AAA battery into the ignition module. To do this open the front hatch, the module will be inside and to the left. The module is held in place by a magnet, detach the module and pull it to the front hatch before unnscrewing the cap and placing the battery in (negative end first). Return the module to its original position, close the front hatch and you're ready to connect the gas bottle to the oven.

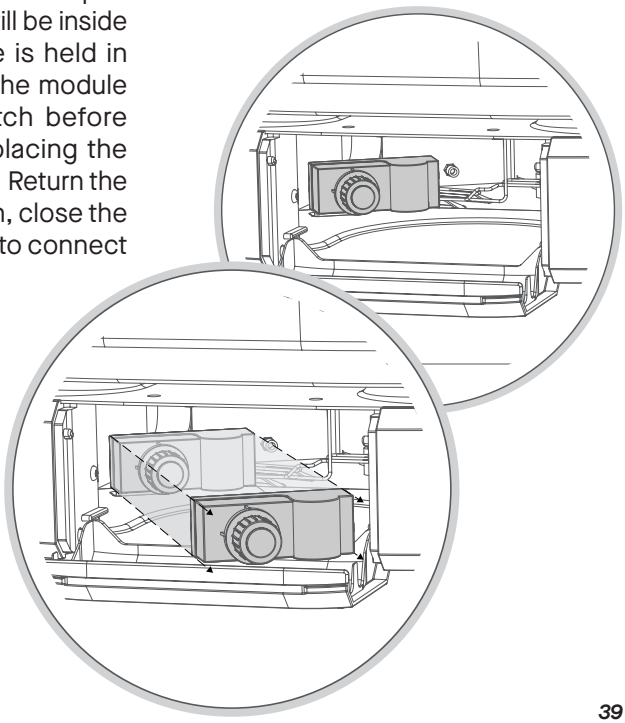

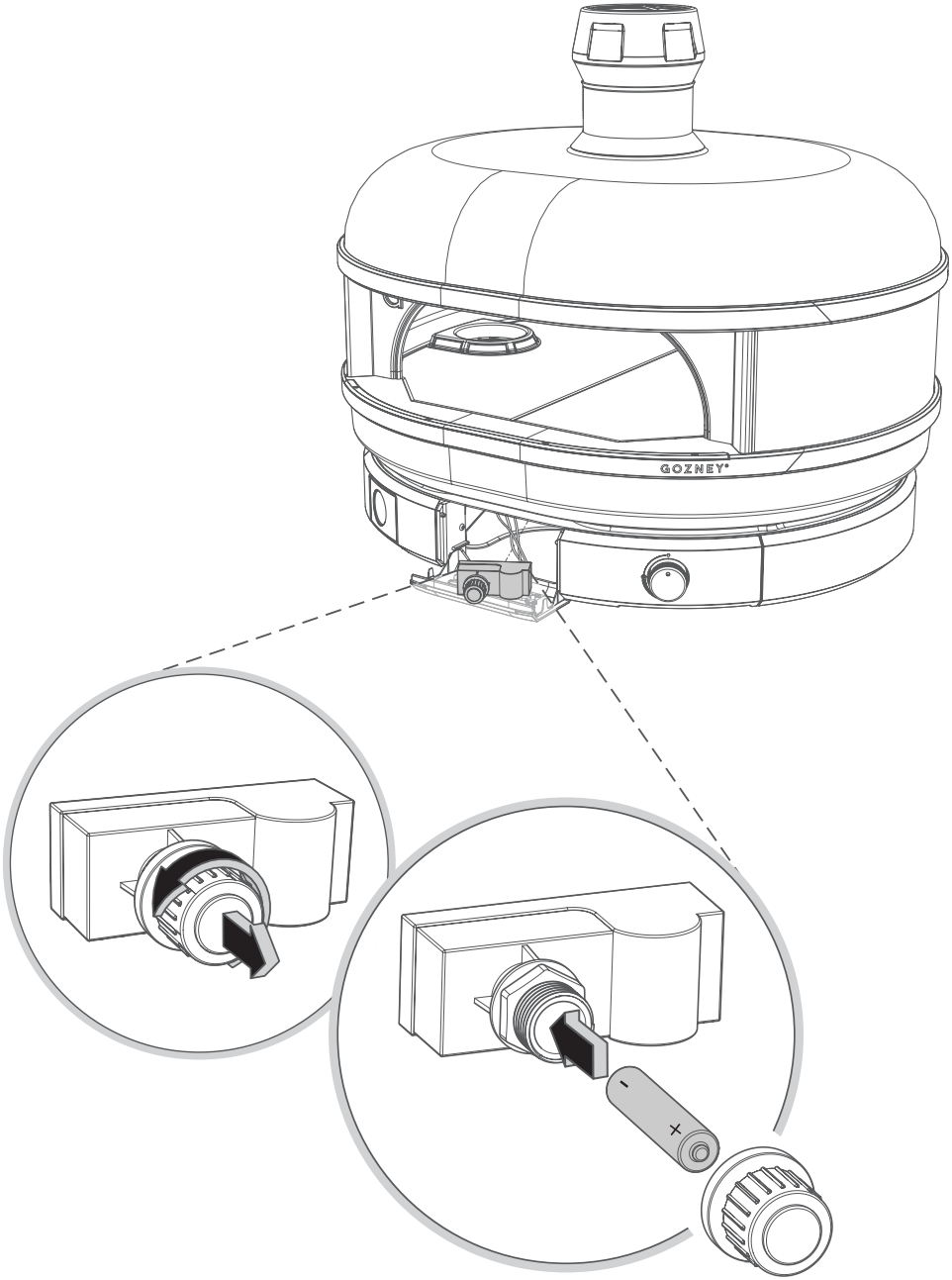
GOZNEY
-
+

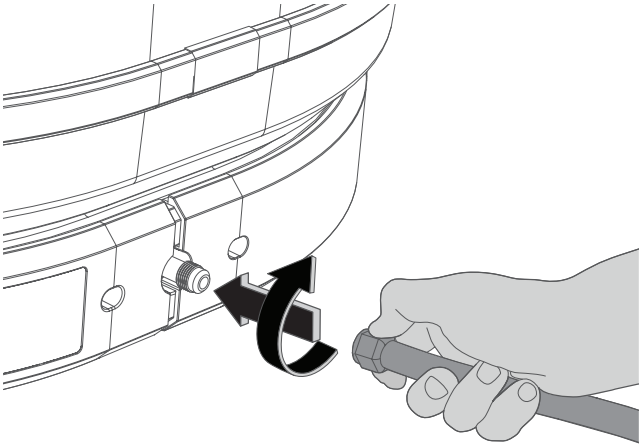

CONNECTING THE GAS HOSE

To attach the gas hose to your Dome S1 take the end of the hose and begin screw it onto the gas connector at the back of the oven. Use the spanner found in the front hatch to tighten. This connection must be tested for leaks before using the oven.

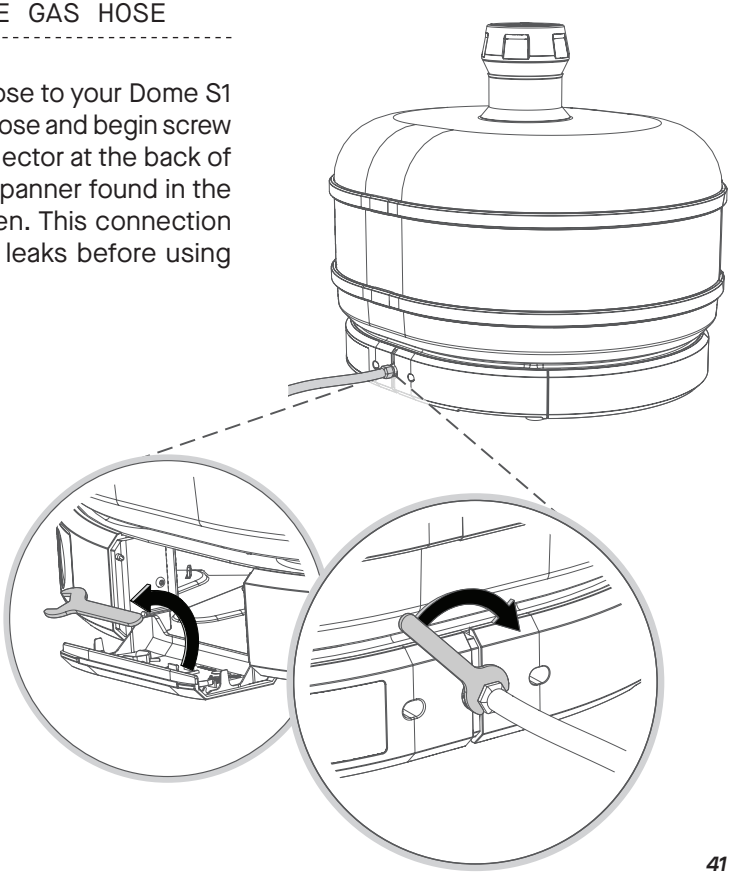

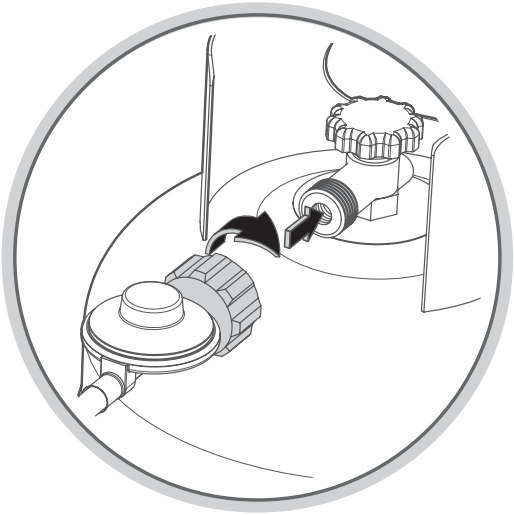

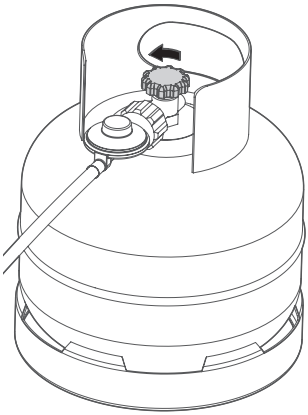

CLOCKWISE REGULATOR

Ensure the gas bottle is turned off. Align the regulator and the gas bottle threads and carefully begin to tighten ensuring the threads aren't crossed. Continue to tighten until a tight fit has been made. This connection must be tested for leaks before using the oven.

Testing For Leaks

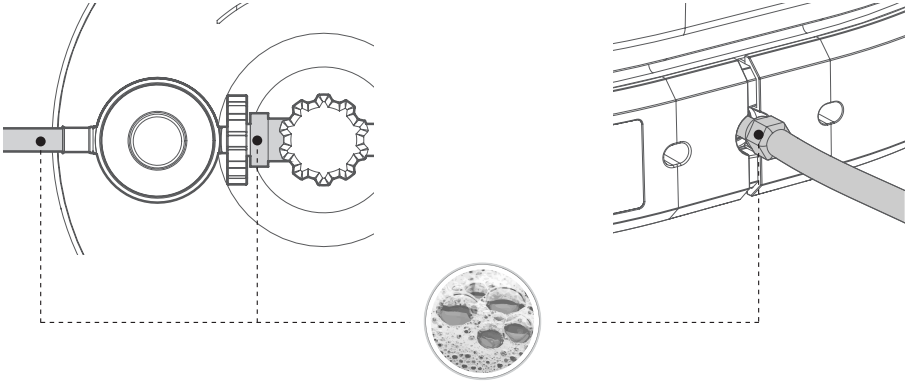

WARNING

You should always check for gas leaks every time you disconnect and reconnect a gas fitting. Never ignite burners when leak checking.

To test for gas leaks, apply a mixture of soapy water with a brush to the highlighted areas and any cracks along the hose. If a leak is present the solution will bubble.

If there is a leak at the hose to oven connection, re-tighten the fitting with a spanner and check for leaks by applying a soap-and-water solution to the highlighted areas with a brush. If a leak persists turn off the gas and DO NOT OPERATE THE OVEN.

If there is a leak at the valve connection, remove LPG cylinder. Do not operate oven. Use a different LPG cylinder and recheck for leaks with the soap-and-water solution.

Ignition

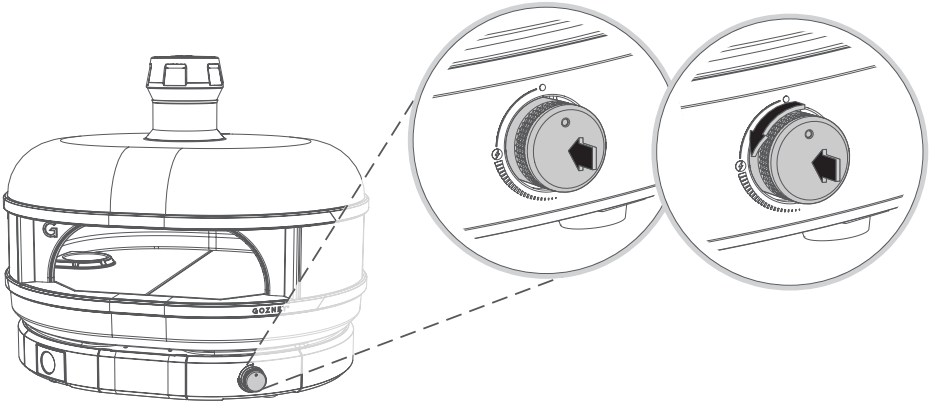

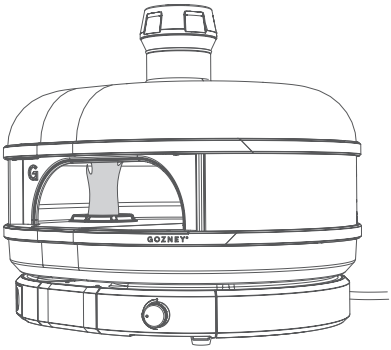

Remove the door and the stone retention wedges before lighting the oven. Do not use the door with gas burner. To light the gas burner press the control knob in and turn the knob 90° until you hear a clicking sound and the burner ignites.

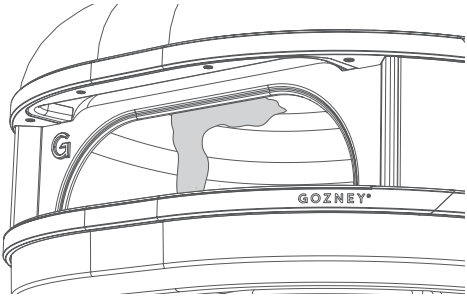

The flame should be yellow in colour and roll along the top of the oven.

First Firing

On your first firing we highly recommend to put the burner on a medium to low flame for 30 minutes to help cure the oven before moving to a high flame.

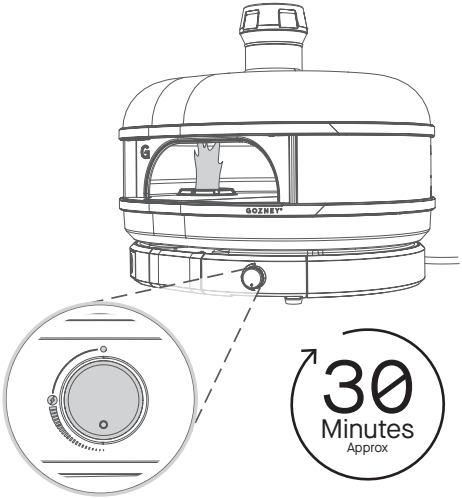

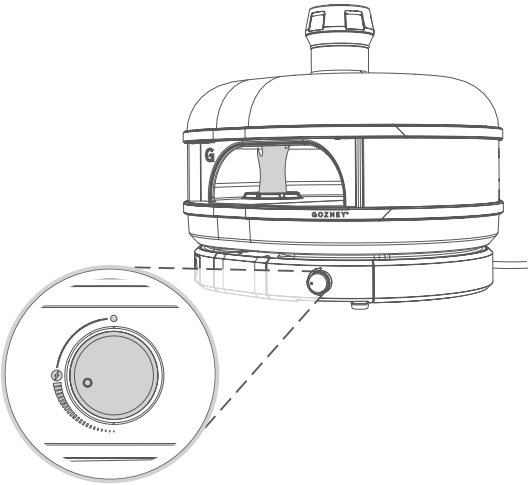

On subsequent firings after curing, you can bring the oven up to the desired temperature from ignition. If the oven has been dormant for an extended period, you should cure the oven again as if it was a first firing.

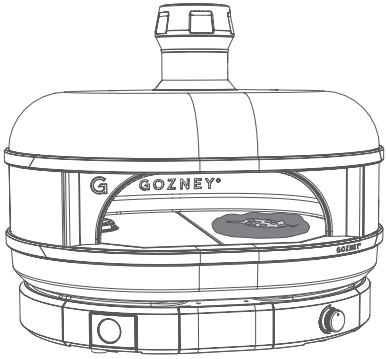

Troubleshooting Gas Burner

Problem Observed	Possible Reasons	Solution
Flame looks too small	• Gas cylinder is near empty • Gas cylinder is too small • Ambient temperature is below 0°C • Blocked burner	• Try replacing the gas cylinder if it is empty. • The cannister maybe too small. We recommend a 9kg canister as a minimum. • If the ambient temperature is below 0°C it is to be expected that a loss of power from the gas canister will occur. • The burner could be blocked, please refer to cleaning instructions available in this manual.
Failure to ignite	• Ignition battery is empty • Blocked burner • Gas canister is empty	• If firing for the first time or replacing a gas bottle the burner can take up to 30 seconds for the gas to flow through the system. Keep the control knob on until the pilot light has ignited. • If the control knob is not making a clicking sound when pushed in try replacing the battery at the back of the unit. Review the maintenance section within the manual for help and guidance on this.
Noisy Flame	• Incorrect ignition • Blocked Burner	• If the burner is making a loud rawring sound first turn the burner down to low flame and then back to high. If the sound continues turn the burner off for 5 minutes and retry ignititing it. If the problem persists still review the cleaning and maintenance instructions to remove debris in the burner.

If the problem persists after trying the following solutions please contact Gozney for further support.

Disconnecting Gas

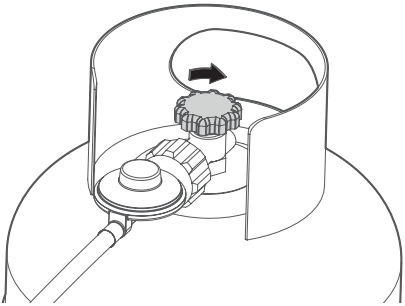

CLOCKWISE REGULATOR

After cooking, be sure to turn off the gas from the gas canister first before turning of Dome S1. This will allow any gas left in the burner or pipe to be used up safely. Three minutes after turning the gas off it will be safe to remove the regulator and turn the control dial back to the off position.

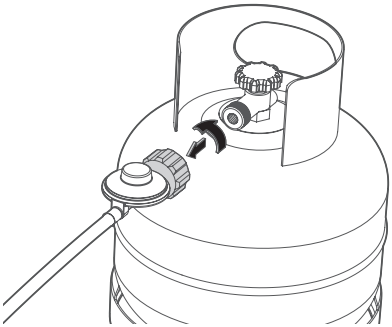

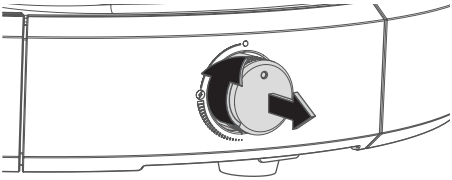

⚠

Before each fire up it is recommended to check for insects and insect nests within the burner tube. A clogged tube can lead to a fire beneath the oven.

Your guide to general maintenance.

4

General Maintenance

Maintenance

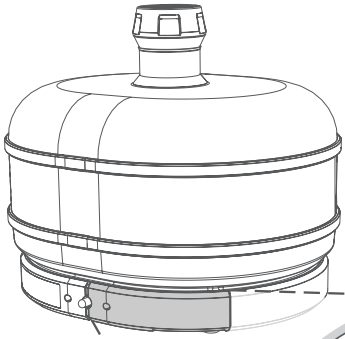

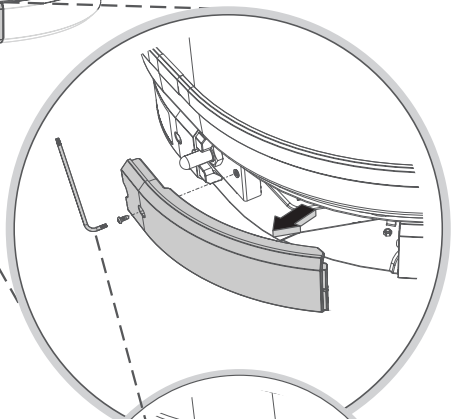

CLEANING THE VENTURI

If your burner's flame is overly yellow or making more noise than usual you may have debris blocking the venturi. When the oven is turned off, disconnected from the gas and cool, remove the rear right hand side panel using the torx screwdriver located in the front hatch of the dock. Use a vacuum cleaner with a long plastic nose to remove any debris. It's good practice to check the inside of the dock for debris regularly.

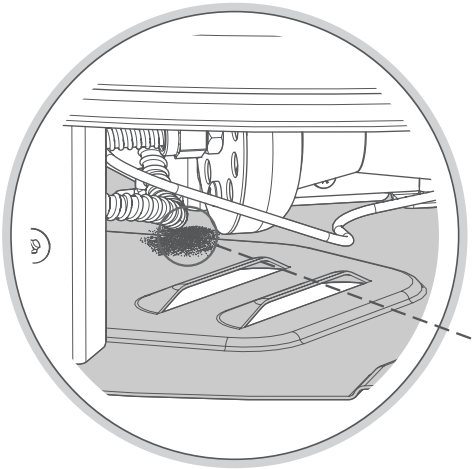

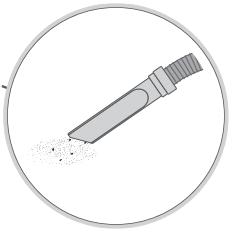

Cleaning The Oven

INTERNAL

The best way to clean the inside of Dome S1 is to burn off any food debris or soot that is left behind. When the oven is over 650°F it will start self cleaning and any burnt on food will burn off after a period of three hours.

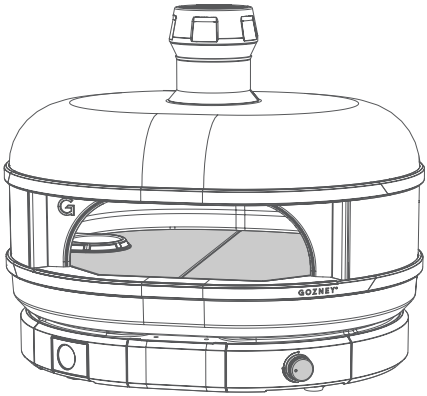

If there is any soot or debris left, wait for the oven to cool down and use a soft brush to dislodge, being careful not to apply too much pressure and damage the oven. Use a vacuum cleaner with a plastic attachment to remove the loose debris from the oven.

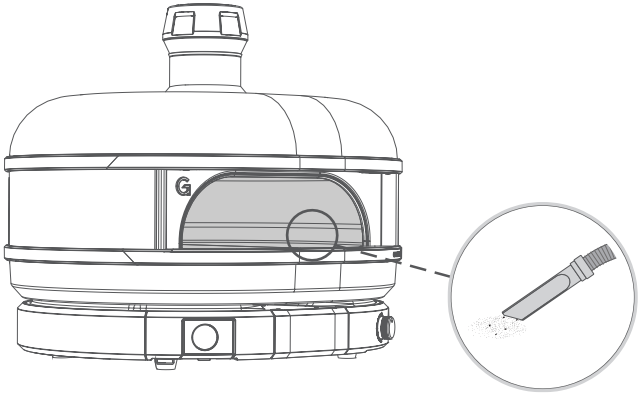

EXTERNAL

For the exterior of the oven use a non caustic bleach free cleaning spray on the dirty areas. Clean the area with warm soapy water and a sponge or non abrasive dish cloth and then wipe clean with paper towels.

Avoid spraying directly onto the thermometer or control dial.

Do not use abrasive cleaning products.

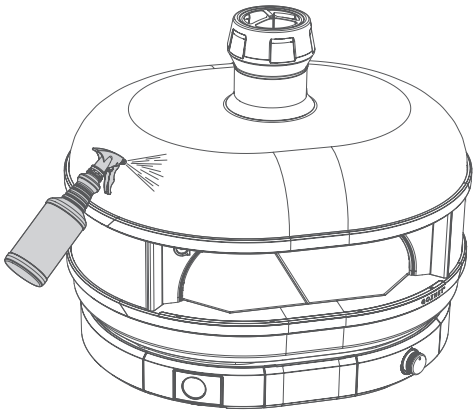

When the oven isn't in use it should be kept under cover away from rain. If you are placing a cover directly on Dome S1, ensure it's completely cooled down before covering.

When using the oven after a long spell of no use, we recommend firing the oven as if it is a first firing.

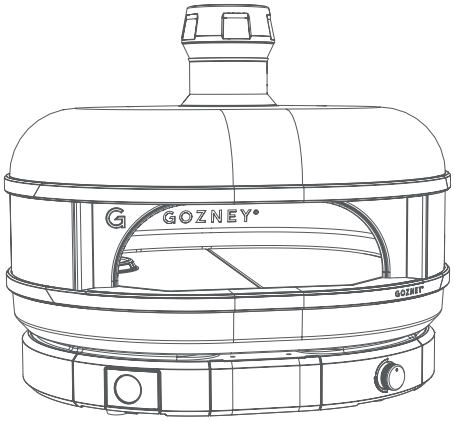

Replacing The Probe

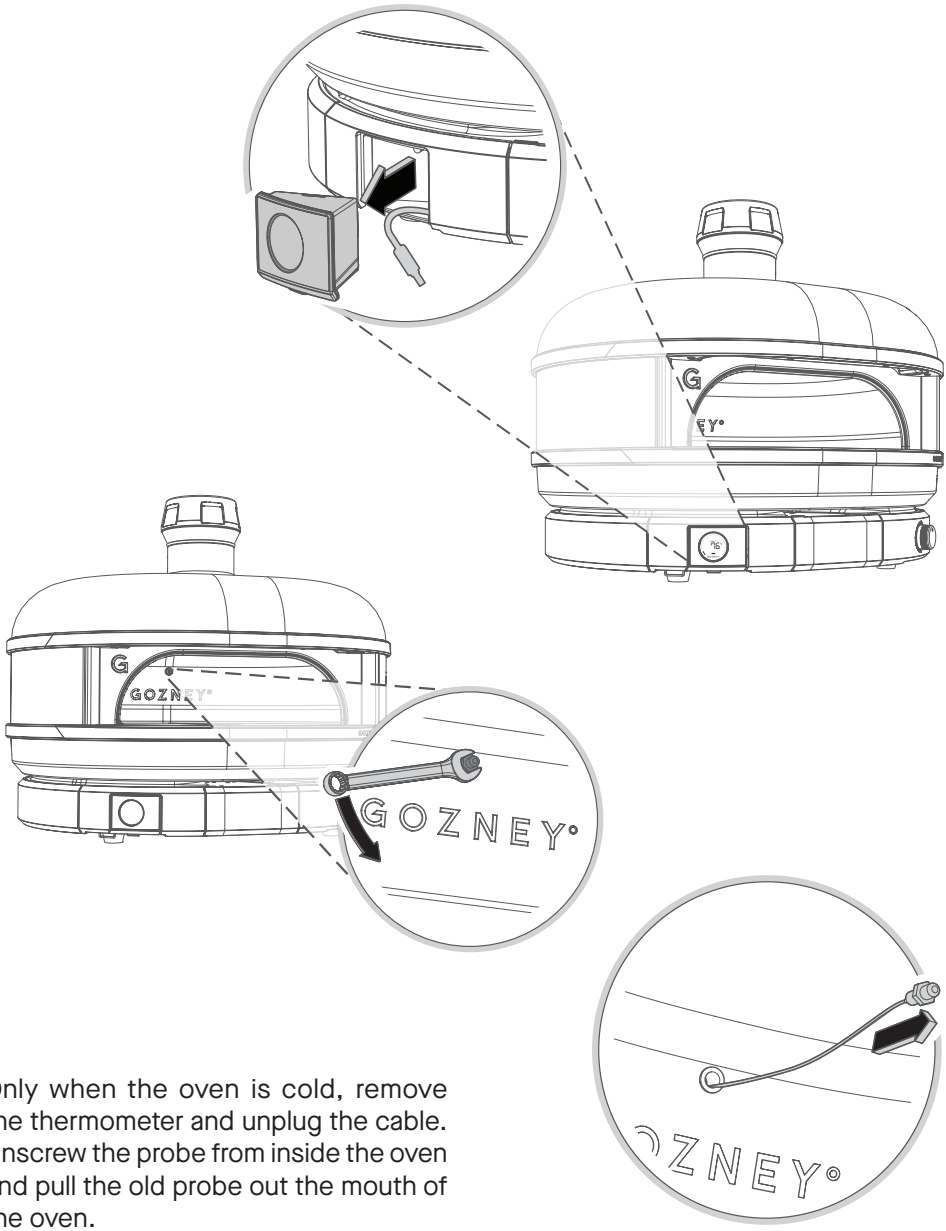

Only when the oven is cold, remove the thermometer and unplug the cable. Unscrew the probe from inside the oven and pull the old probe out the mouth of the oven.

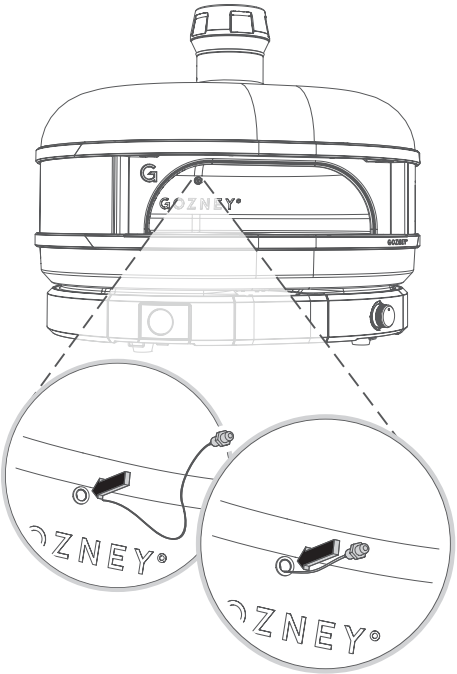

Push the new probe's wires into the hole and feed them through until they are visible from inside the area where the thermometer is normally housed. Hand tighten the probe in place, avoid using a spanner as you may damage the probe.

BEWARE:
Don't over tighten probe.

Plug the new cable into the back of the thermometer and return it to its position within the Dome S1 Dock.

Double check the probe is functioning by checking the digital temperature display and return the panel to the back of the oven.

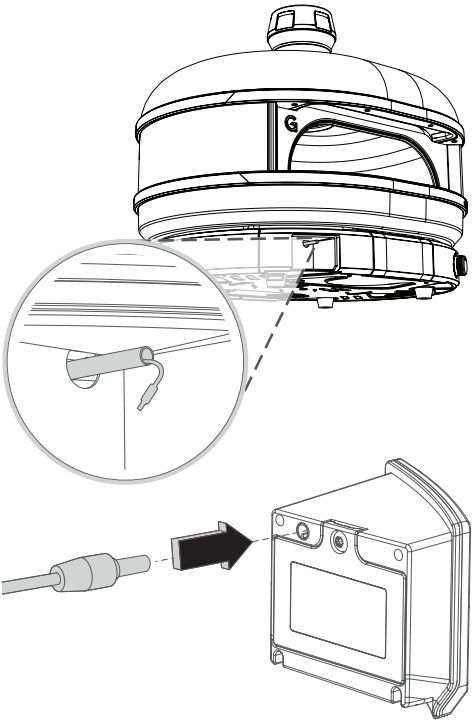

GOZNEY°