Technical Manual

# Dome

GOZNEY®

Wood-fired cooking made easy.

# Introduction

This instruction manual contains important information necessary for the proper assembly and safe use of the appliance.

Read and follow all warnings and instructions before assembling and using the appliance. Follow all warnings and instructions when using the appliance. Keep this manual for future reference.

Never operate this appliance in enclosed areas. Failure to follow these instructions could result in fire or explosion which could cause property damage, personal injury or death.

—

Never operate this appliance unattended.

—

Never operate this appliance within 5ft (1.5m) of any structure or combustible material.

—

Never operate this appliance within 25ft (7.5m) of any flammable liquid or gas.

Do not fill the cooking vessel beyond the limitation of the door dimensions.

—

Heated liquids remain at scalding temperatures long after cooking process.

—

Never touch cooking appliance until liquids have cooled to 115°F (45°C) or less.

—

If a fire should occur, keep away from the appliance and immediately call your fire department. Do not attempt to extinguish an oil or a grease fire with water.

## GENERAL ADVICE

Dome gets extremely hot and should not be used by children. Do not allow children near the device during or after operation. Dome can stay hot for a few hours after use.

—

Do not use under any apartment or condominium balcony or deck.

—

Dome is not intended for and should never be used as a heater.

—

Dome has not been designed or intended to be used on a boat or within a recreational vehicle or any other form of confined area.

—

Assembly and operation of the oven should be carried out by a competent person.

—

The use of alcohol, prescription or non-prescription drugs may impair the consumers ability to assemble or operate the device safely.

—

Do not use any plastic or glass utensils within Dome.

—

Use heat-resistant gloves when operating the oven.

Do not insert items into Dome that are bigger than the dimensions of the oven mouth.

—

Do not over fill Dome or cover the burner.

—

Do not move Dome whilst in operation.

—

Do not operate Dome in strong winds. Winds can extinguish the flame and also cause irregular air pressure resulting in the flame and heat coming out the back of Dome. Use a wind break in open areas but keeping over 45cm away from the device.

—

Do not pour water on to the cooking stone as this will likely crack it and could be dangerous because of oil and grease.

—

Do not wear loose flammable clothing or sleeves near Dome.

—

Parts sealed by the manufacturer or the agent shall not be manipulated by the user.

—

Never use gas and wood simultaneously.

—

If the appliance is installed in a room ensure there is adequate ventilation to

prevent high carbon monoxide concentrations.

—

Never operate this appliance within 25ft of any flammable liquid.

—

Do not fill the cooking vessel beyond the limitation of the door dimensions.

—

Never operate this appliance unattended.

—

For indoor installations please speak to your local ventilation company for advice and follow the separate ventilation and extraction guidance available from Gozney.

—

Ensure the oven is placed on a flat surface.

—

For replacement parts go to Gozney.com.

## END OF LIFE

At products end of life, please dispose responsibly.

# Product Overview - What's in the Box

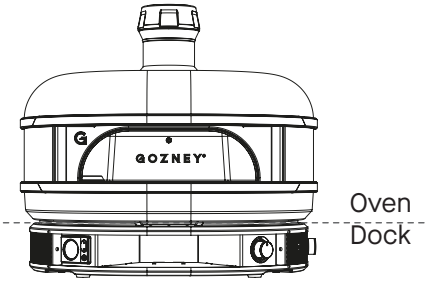


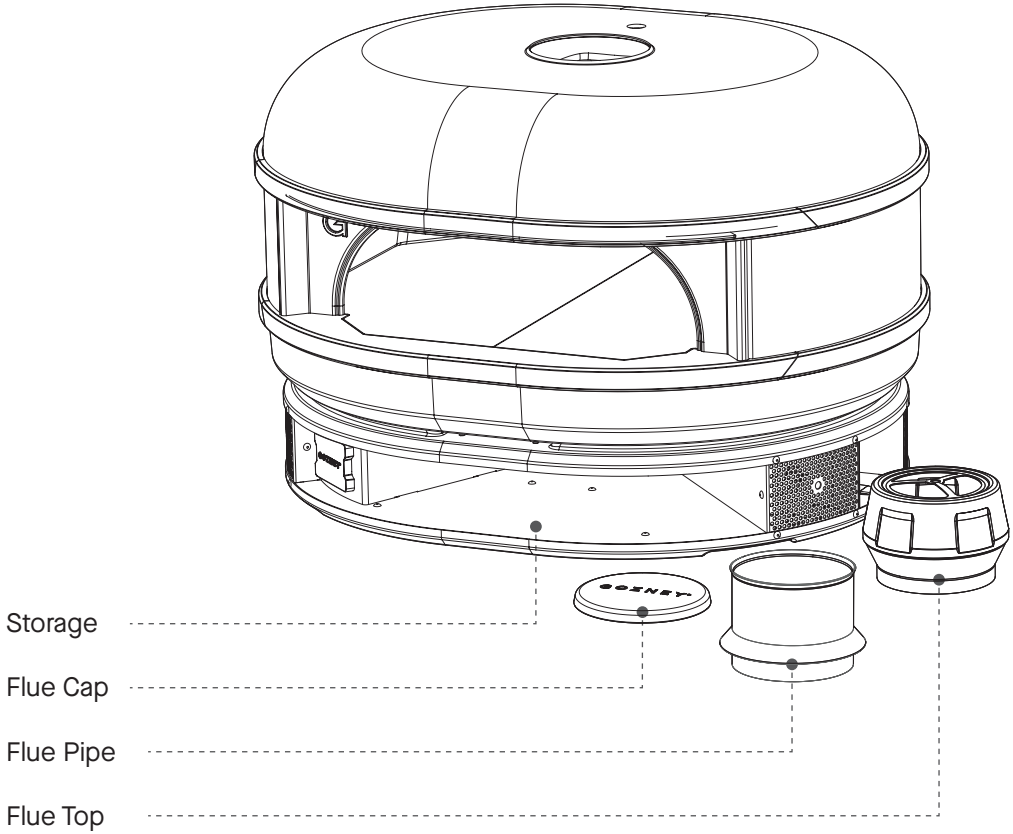

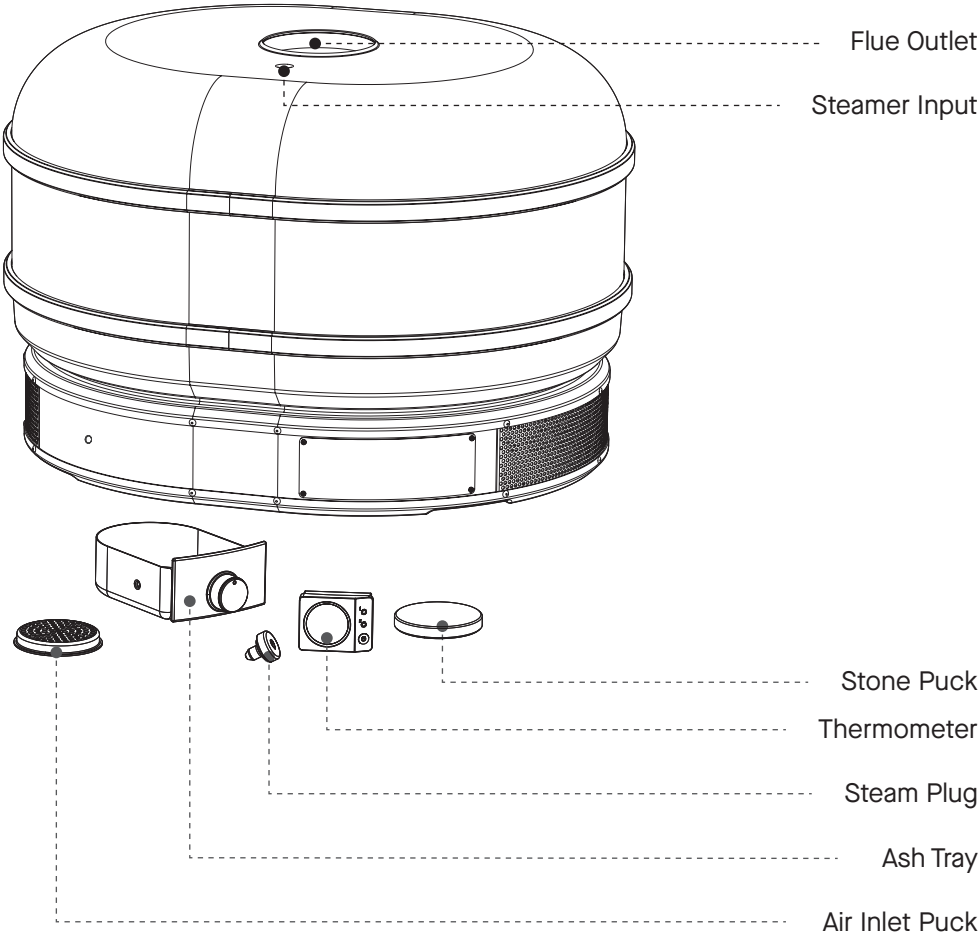
Flue Outlet
Steamer Input
Stone Puck
Thermometer
Steam Plug
Ash Tray
Air Inlet Puck

This section details the correct operation and install of a Gozney Dome.

# 1

# Operation & Installation

## SAFETY CONSIDERATIONS

This appliance must be installed on a secure level base prior to use.

**WARNING:** This appliance will become very hot, do not move it during operation.

**WARNING:** Keep away from children and pets.

Dome unit and the burner must always be well ventilated.

—

Do not use plastic or glass utensils inside Dome.

—

Do not move or leave Dome unattended whilst in use.

—

Do not operate Dome in strong winds. Wind can extinguish flame.

Do not spill or pour water onto the cooking floor. This is dangerous and can crack the stone.

—

Do not wear flammable loose garments or sleeves.

Do not cover oven mouth when there is an active flame, this will cause damage to the oven.

—

This oven is not intended to be installed in or on recreational vehicles.

—

Product may contain sharp edges! Please use caution.

**WARNING:** Contact your local municipality for any building codes applicable to the use, installation and operation of outdoor barbecue appliances.

## FIRE

Most fires are caused by a build up of grease. In the event of a fire ensure all people and pets are kept as far away as possible.

Use a fire extinguisher if possible, but if water is the only fire retardant available, thoroughly soak the area around the appliance. When spraying water on Dome itself, do not use a strong jet of water, as this may cause splashing of burning grease, resulting in a further spreading of the fire.

## CARBON MONOXIDE

Carbon Monoxide is a highly poisonous gas which can be produced when the device isn't receiving enough ventilation.

We therefore recommend using wood fuel in a well ventilated area away from direct wind and to never cover the oven mouth when there is an open flame present.

It is difficult to know if your device is producing Carbon Monoxide as it is an odourless and colourless gas.

It can, however cause these symptoms when you are exposed to it:

- Tightness across the forehead
- Headache
- Weakness
- Dizziness
- Nausea
- Vomiting
- Coma, intermittent convulsions
- Depressed heart action, slowed respiration

If the exposure has been severe it may cause death.

Please follow local regulations and install a CO alarm if necessary.

This section details the set up of the oven and the accessories included with your Dome.

# 2

# Set Up
# & Accessories

# Moving the Oven

The lifting straps located on the bottom of the oven are only suitable for single use. Please remove them once the oven is located to it's final location and use hand holds below.

Do not move Dome whilst in operation or when it is still hot.

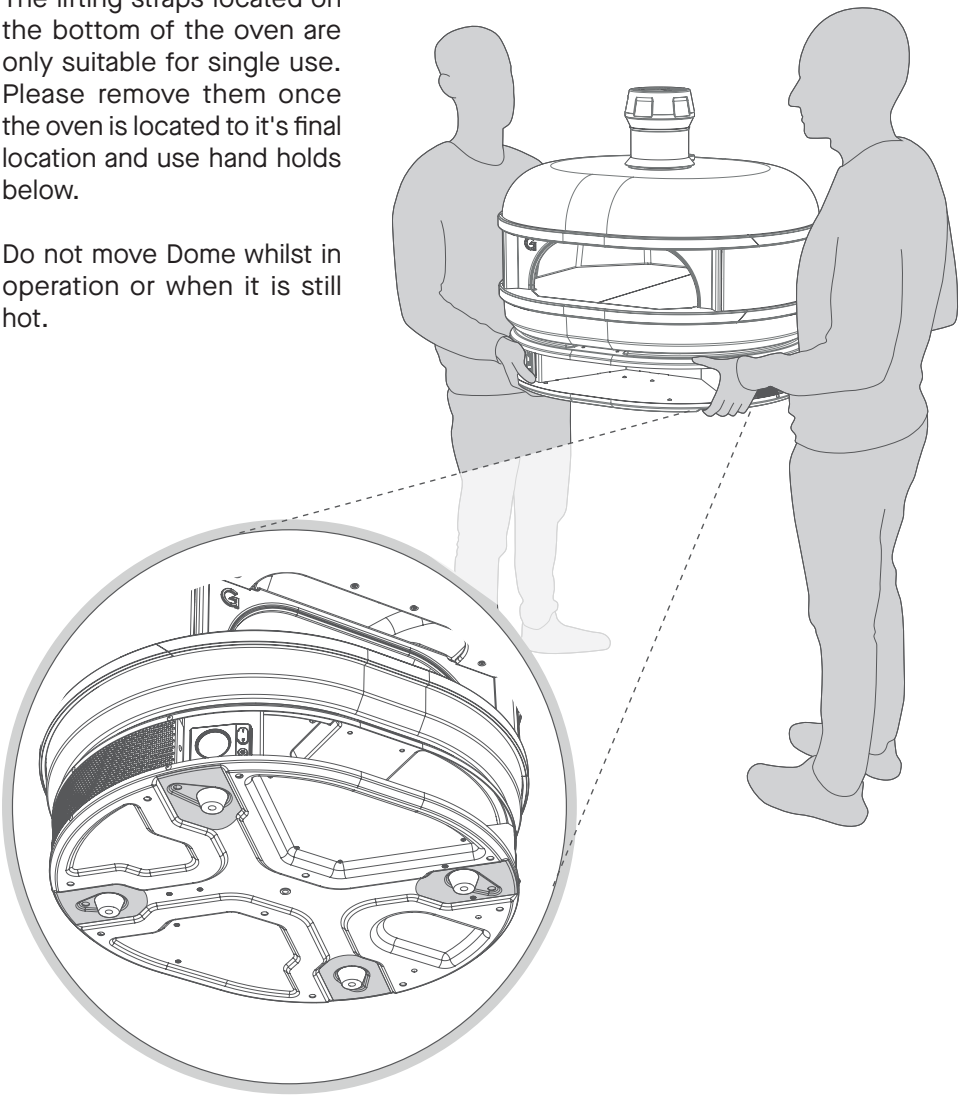

Never attempt to move the oven on your own. Two people should pick up the oven lifting from under the rounded ends of the oven, do not use the mouth of the oven as a lifting point.

Remove anything loose on the oven before moving.

Always plan the route you are going to take, remove any obstacles on your path and ensure the oven will fit through the intended route.

Ensure the area you are moving the oven to fits with the guidelines on the following page.

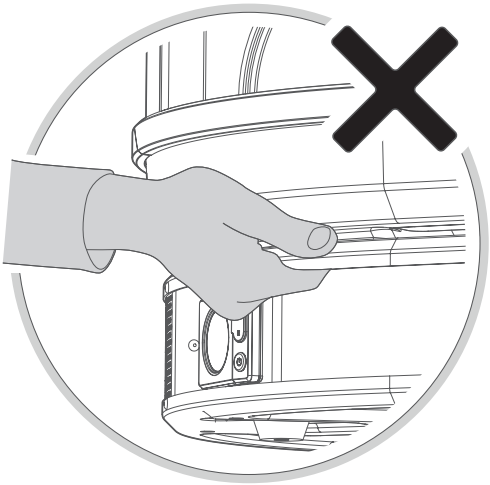

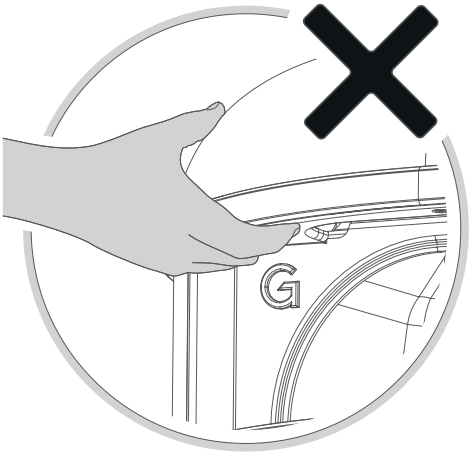

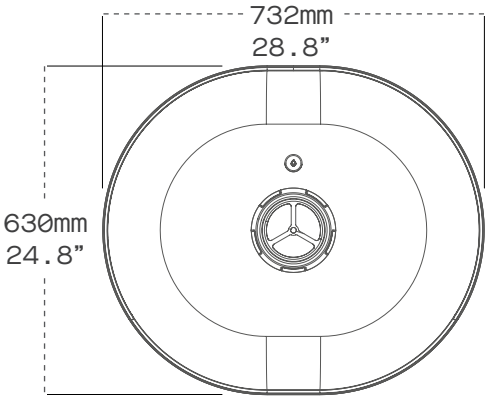


## OVEN PLACEMENT

When deciding where to place Dome ensure the area is large enough to accommodate the oven with 2” (50mm) around the base of the dock for air intake and at least 14" (350mm) clearance above the oven. It is important nothing is blocking the meshed panels as this will affect the performance of Dome.

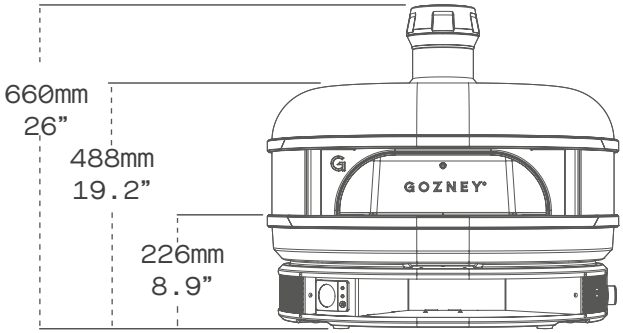


## WARNING

When placing your oven it is important to maintain proper clearances from combustible construction. Ensure Dome has 1ft clearance (back and sides) and 3ft 4” clearance (front) from any combustible construction.

Under no circumstances is the oven to be placed under or on top of any combustible structure.

Always keep the area around the oven clear of any combustible materials, gasoline and other flammable vapors and liquids.

We recommend the height of the floor to be around the level of the bottom of the users elbow (usually around 3ft 11” from the ground)

Ensure the surface the oven is being placed on is completely level, stable and capable of easily holding the weight of the oven - 130lb.

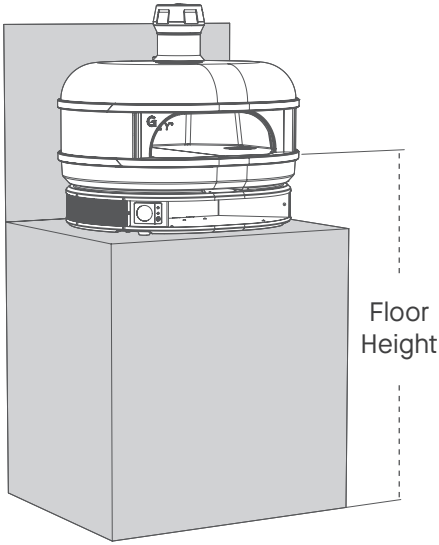


## WARNING

Never operate the oven in high winds or if the wind is blowing into the oven mouth.

Wind should be taken into consideration when choosing a location. The oven should be orientated so that the mouth is facing away from the wind. Avoid using the oven in windy conditions, it is important to have wind breaks situated around the oven to stop the wind from blowing the flame down into the dock. If you see fire coming from the dock. Turn the oven off from either the gas bottle or control knob. Never operate the oven in high winds.

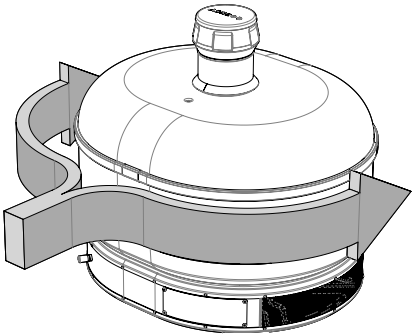

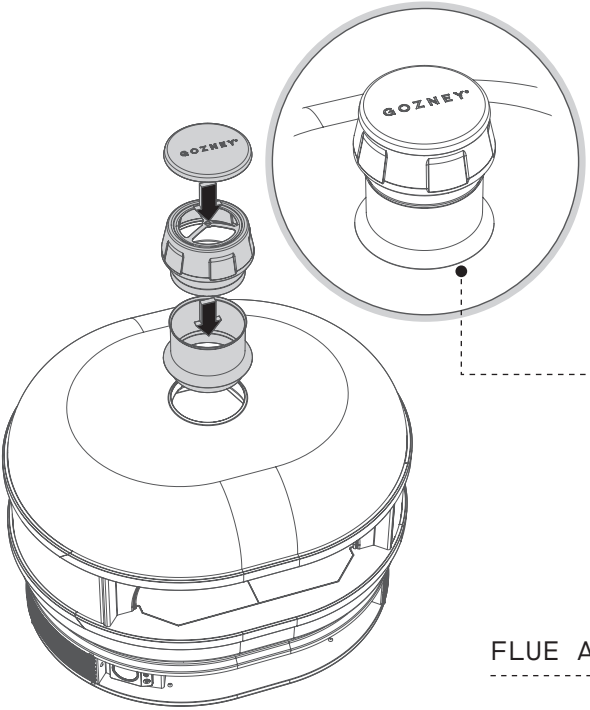


The flue is designed to have a rain guard which has a 1/4" (5mm) gap from the Dome.

## FLUE ASSEMBLY

The rain cap prevents moisture from getting into the oven and should only be used when the oven is cooled and not in use.

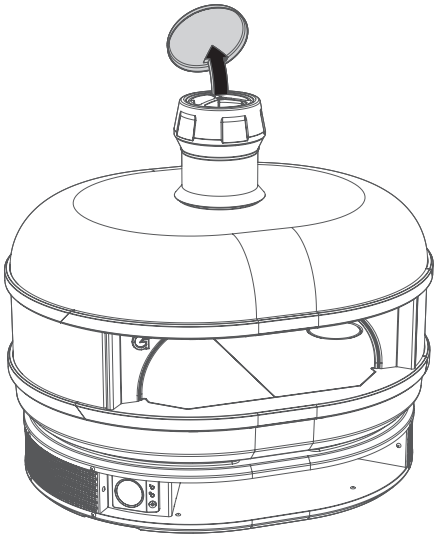

## STEAM PLUG

The steam plug should always be inserted into Dome unless you are using the oven in conjunction with the steamer accessory.

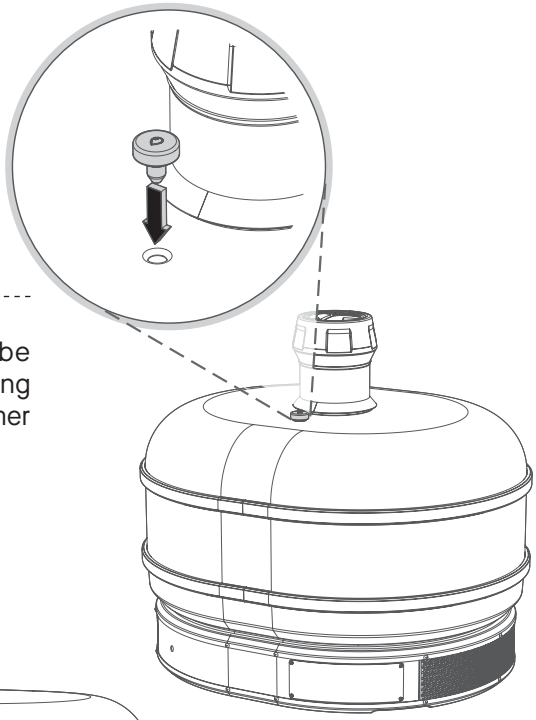

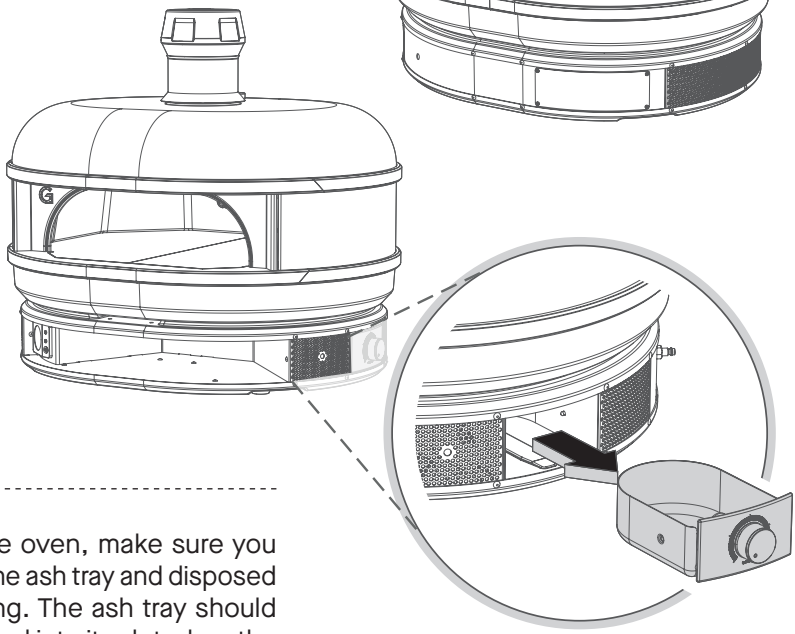

## ASH TRAY

Before firing the oven, make sure you have removed the ash tray and disposed of any packaging. The ash tray should always be inserted into its slot when the oven is in use. See the “Firing up wood” chapter for further details.

# Digital Temperature Display

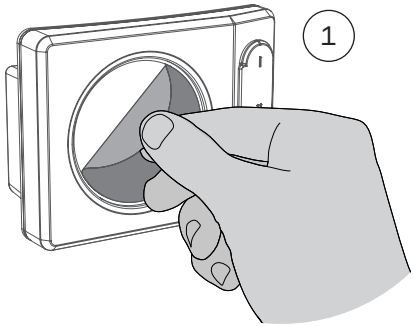


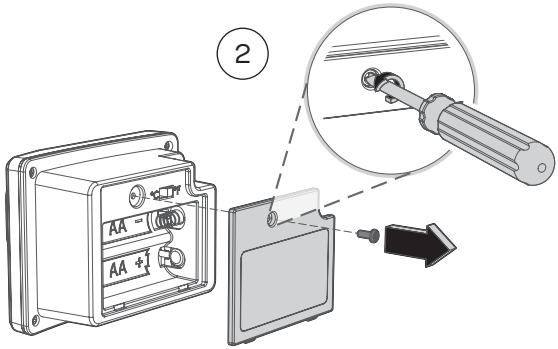


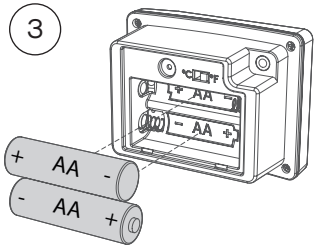


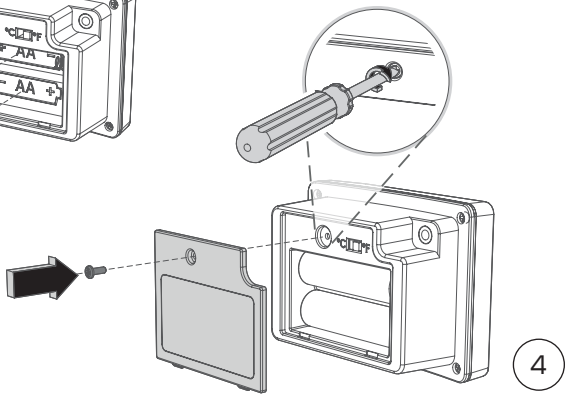

## SET UP

After installing the batteries hold the power button down until the display turns on. Find the sensors jack by removing the plastic cap and plug it into the rear of the display, the screen will then show the temperature from within the oven.

The Digital Temperature Display module is held in place with magnets.

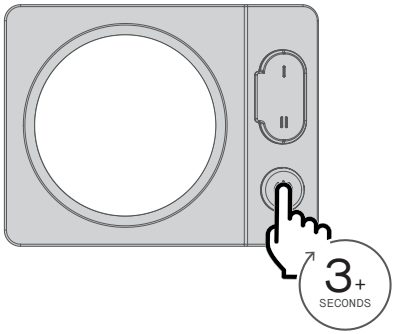


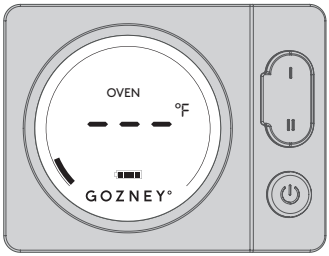


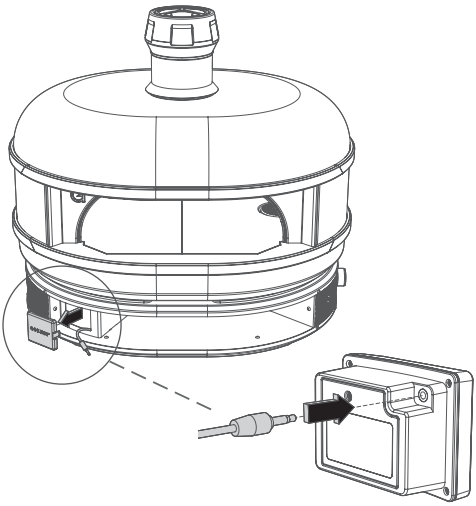

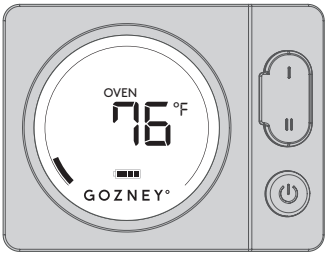

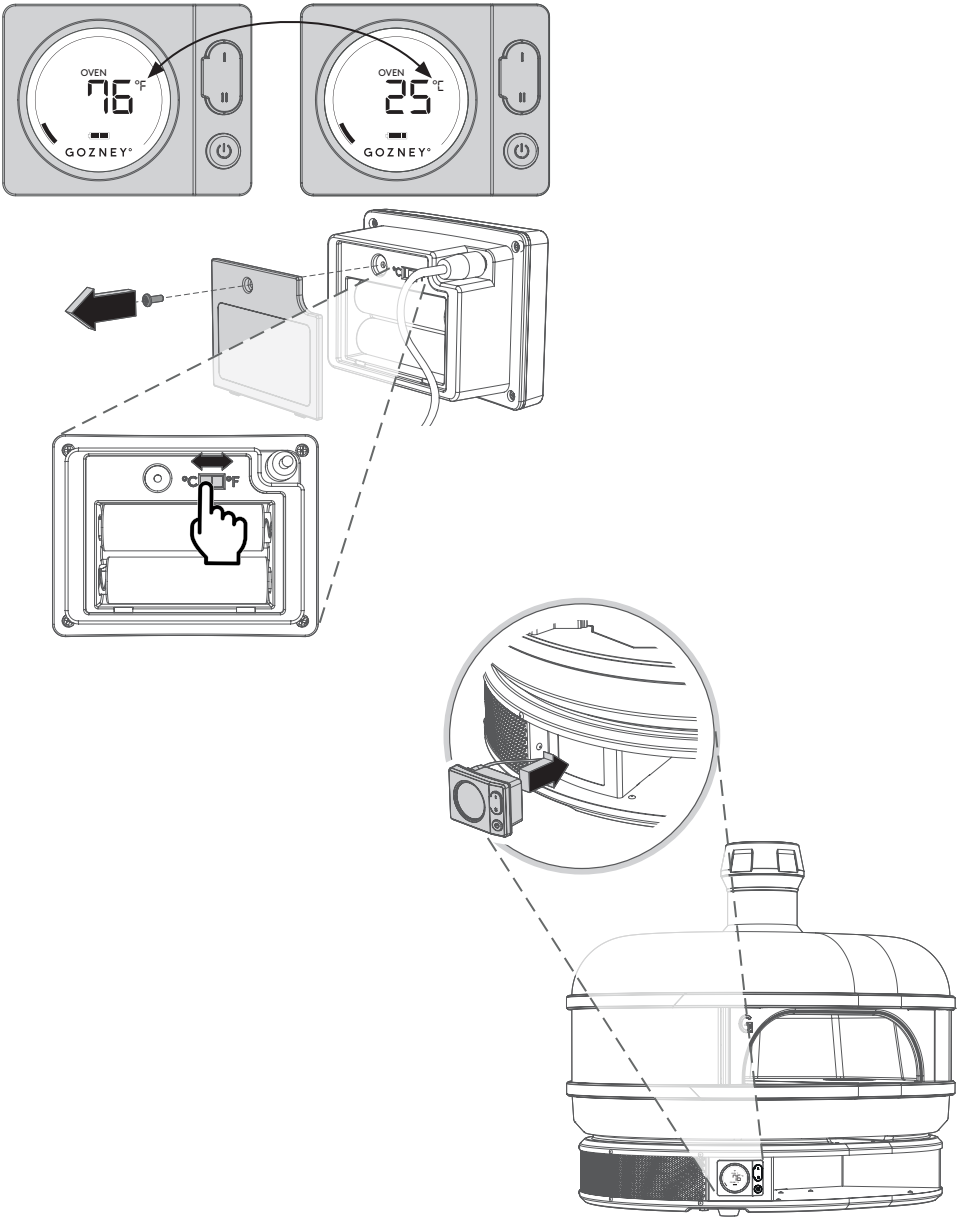
OVEN
76 °F
GOZNEY
OVEN
25 °C
GOZNEY
°C
°F

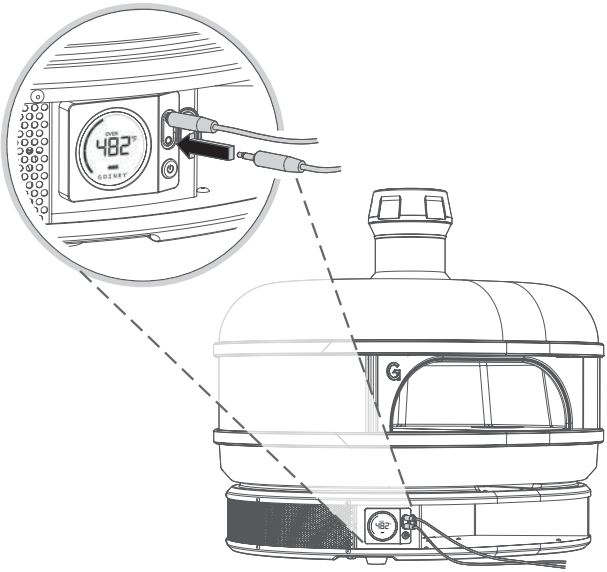


## USING THE PROBES

When the temperature probes are connected to the screen, the display will automatically begin to cycle through the temperatures of the oven and the two probes.

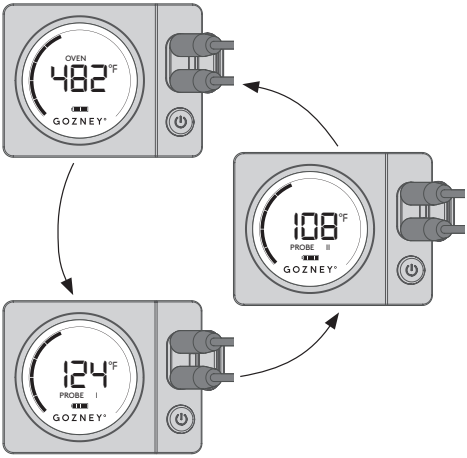

# Digital Temperature Display Troubleshooting

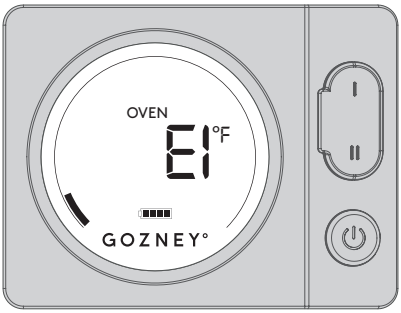


## E1 ERROR CODE

If the thermometer is displaying an error code E1. This is caused by either:

1) A loose connection where the jack plug connects to the thermometer. Please ensure the jack plug is pushed fully in to the socket on the back of the thermometer.

2) Loose connection at the terminal. Please refer to maintenance instructions at the end of the manual.

3) Damage to the probe. The probe may need replacing. Please refer to maintenance instructions at the end of the manual.

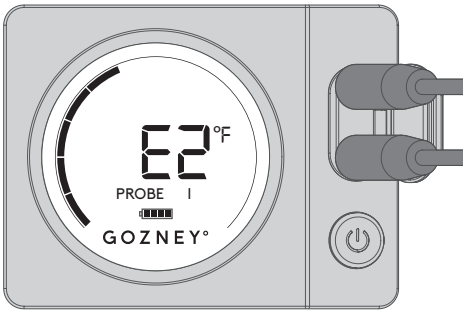


## E2 ERROR CODE

If the thermometer is displaying an error code E2. This is caused by either:

1) A loose connection where the jack plug connects to the thermometer. Please ensure the jack plug is pushed fully in to the socket on the unit.

2) Damage to the cable. Visual inspect for kinks or chafe.

3) Water ingress on the cable can short the signal. Ensure the cable is dry.

# Probes Guidelines

When using a meat probe the aim is to get the sensor to the coldest part of the meat to ensure the meat is cooked through.

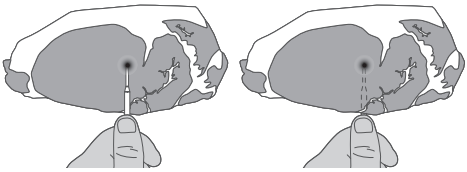

The coldest section of the meat will be in the centre of the thickest part. Placing the probe on top of the meat and using your thumb as a depth guide is the best way to ensure the probe is positioned correctly.

For accurate readings the probe must be distanced from any bone, fat or gristle.

## PROBES CARE & USAGE

Before the first use and after subsequent uses, clean the probes with hot soapy water and dry thoroughly. Avoid immersing the probes in water whilst cleaning. The probes are not dishwasher safe.

To prolong the life of the probes always store them indoors in between uses and ensure the silicone plugs are firmly pressed into the jack openings on the thermometer.

Keep the probes and their leads away from the flames. Direct contact with fire will damage the device.

**FDA Safe Minimum Internal Temperatures**
(as measured with a food thermometer)

| FOOD | TYPE | INTERNAL TEMP. |
|---|---|---|
| Ground Meat | Beef, Pork, Veal, Lamb | 160°F (72°C) |
| | Turkey, Chicken | 165°F (74°C) |
| Fresh Meat | Beef*, Veal*, Lamb*, Pork* | 145°F (63°C) |
| | Poultry | 165°F (74°C) |
| | Fish with fins | 145°F (63°C) |

* Minimum rest time of 3 minutes

Your guide to burning wood.

# 3

# Firing Up Wood

# First Firing

## INTRODUCTION

When firing the oven for the first time, it is important to slowly bring the oven up to temperature. This will help prevent thermal shock to the stone floor.

## WOOD SAFETY

Do not use spirit or petrol for lighting or re-lighting! Use only fire-lighters complying to EN1860-3 or subsequent!

—

Do not use treated or painted wood.

—

Do not use soft woods (pine and sappy woods) or freshly cut wood.

⚠

WARNING: Before lighting the oven, ensure you have adhered to the extraction specified in this manual. If you are unsure, do not use the oven.

⚠

Never use flammable liquids including, but not limited to, barbecue lighting fluid, petrol or lighter fluids to start or boost a fire in this oven. Keep all such liquids well away from the oven while it is in use. Never use unapproved fuel in your oven.

⚠

Do not throw wood against the back or side walls of the oven, this may void the warranty.

⚠

WARNING: Do not pour or spray liquids onto the oven floor or into the oven interior as this can damage the oven and could void warranty.

⚠

CAUTION: Dispose of ashes in a safe manner, beware of hot embers even after the oven has cooled.

# Wood To Use

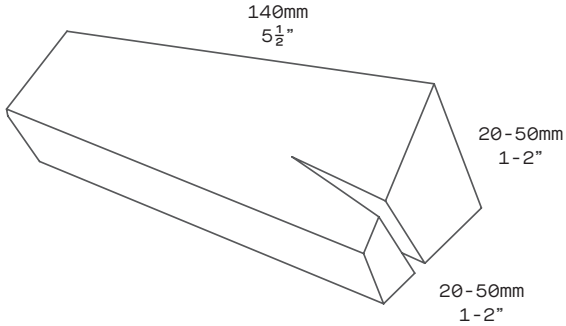


## Wood is the most important factor when firing the oven on wood. It will determine the level of performance you will get from the oven.

### SIZE

Smaller is better, we recommend using small pieces of kindling at 5½”(140mm) by 1-2”(20-50mm) by 1-2”(20-50mm).

### MOISTURE CONTENT

16% is the optimum moisture level for your wood, but anywhere between 10-20% is good.

### TYPES OF WOOD

Kiln dried hard woods are best as they are dense and have a lot of energy to burn and will produce more heat than soft woods. Avoid using sappy woods and soft woods like pine as they tend to produce creosote which can build up in your burner and oven.

### WOODS TO USE

- Ash
- Alder
- Oak
- Beech
- Hickory
- Fruit trees, Apple, Pear etc

### WOODS NOT TO USE

- Pine
- Fir
- Cedar
- Redwood
- Spruce
- Fatwood
- Processed woods e.g: painted or stained wood
- Sappy wood

# Wood Fire Set Up

When firing the oven on wood you should have the stone puck covering the burner hole and the mesh puck over the ash shoot.

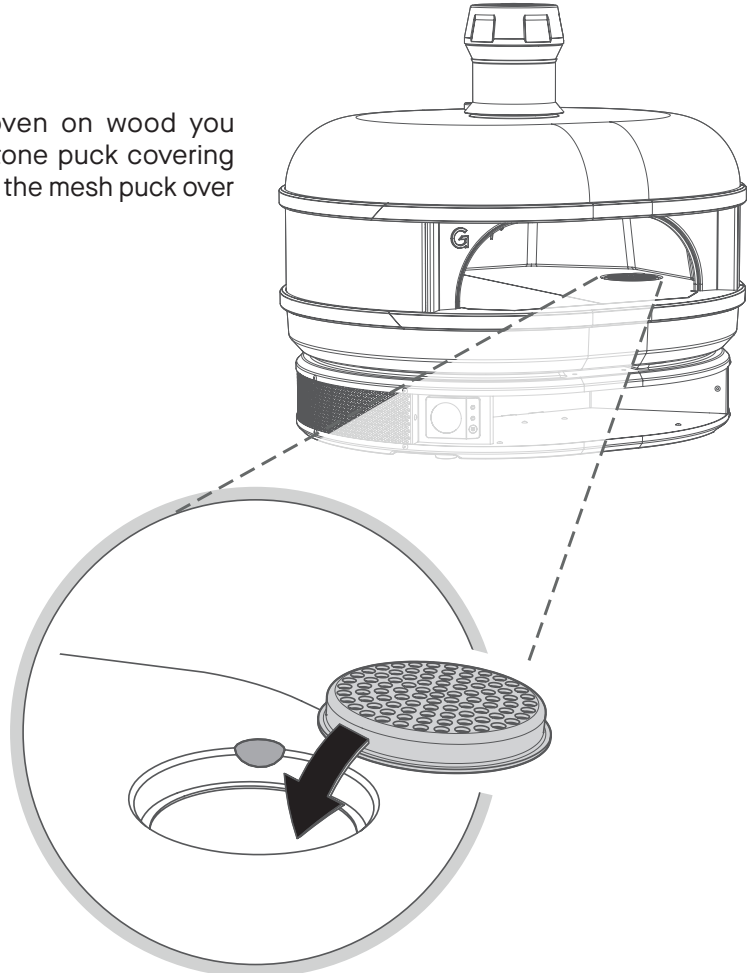

# Fire Starting

On first fire up follow the below procedure but ensure the fire kept at a moderate level for 30-60 mins.

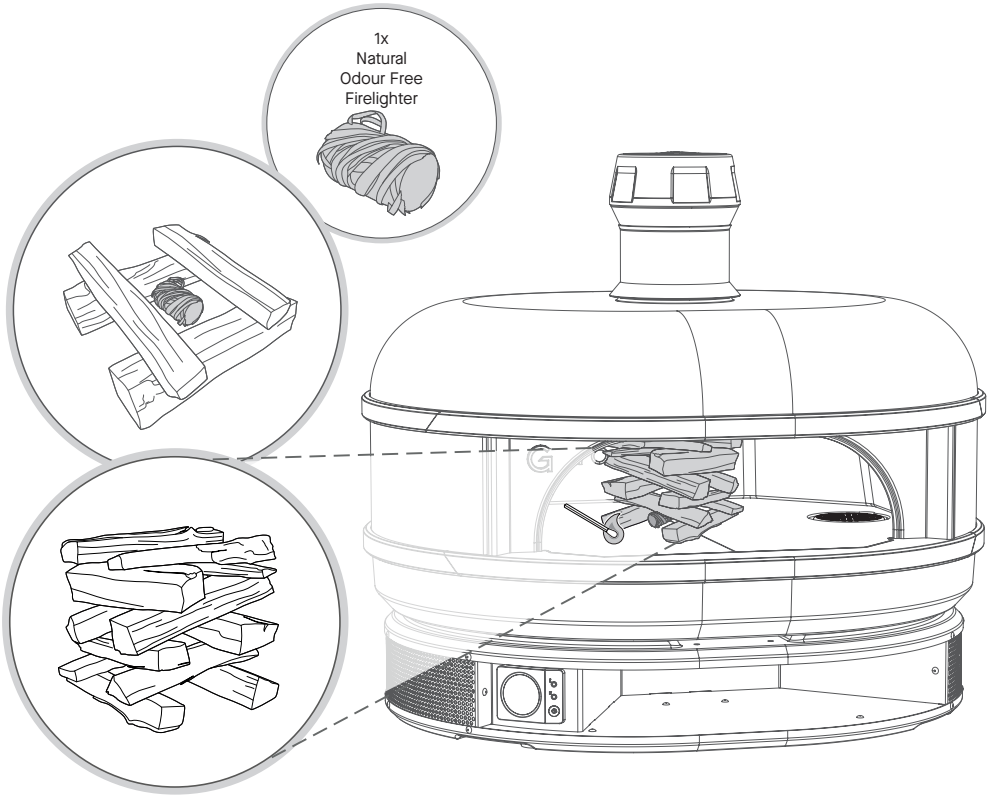

# Moving The Fire

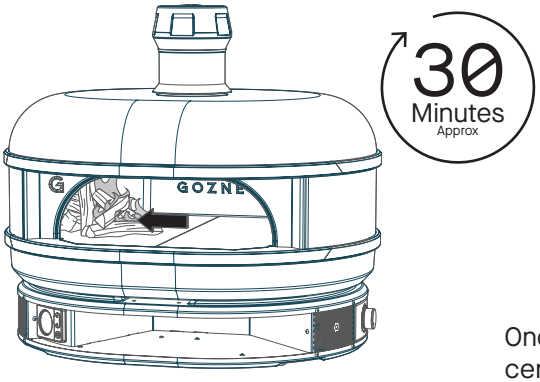


Once the fire has established itself in the center of the oven push it over to the left and continue to feed it for approximately 30 minutes or until the oven is fully saturated.

Then move the fire to the right of the oven (over the mesh puck). and continuously add wood to the fire to keep a rolling flame across the top of the oven.

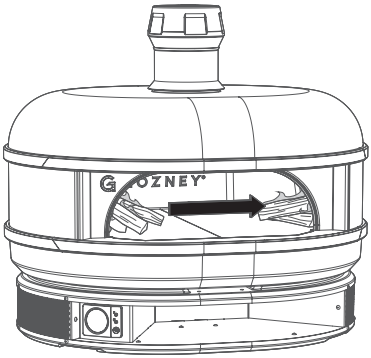


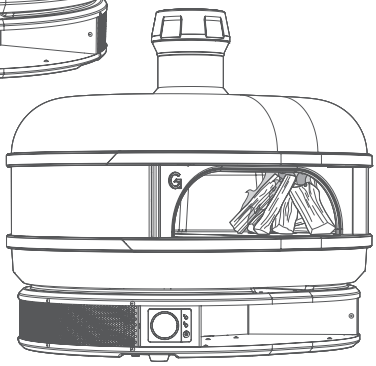

The flame from the wood fire should roll across the length of the oven's roof. Avoid overfeeding the fire, there should never be flames coming out the mouth of the oven. If you are struggling to get a good flame, ensure the wood you are using follows our guidelines at the beginning of this chapter.

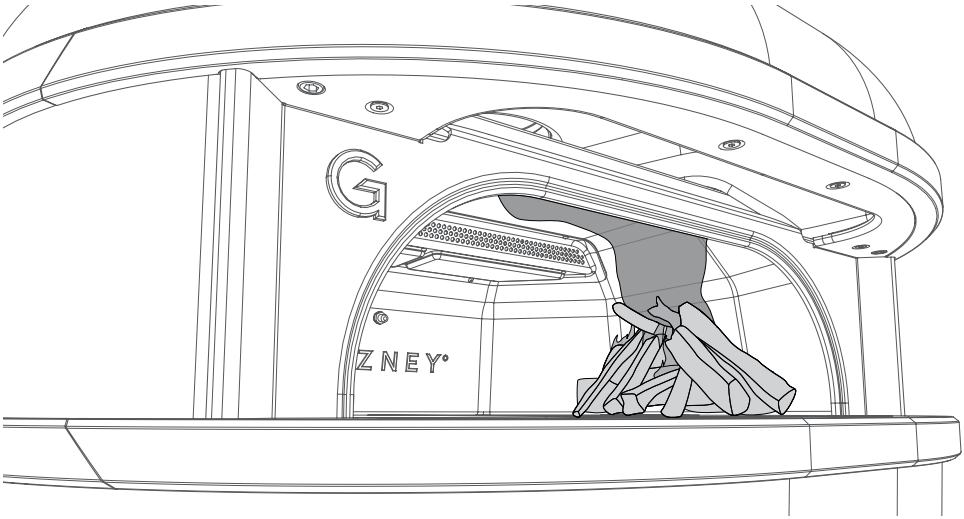

# Ash Tray

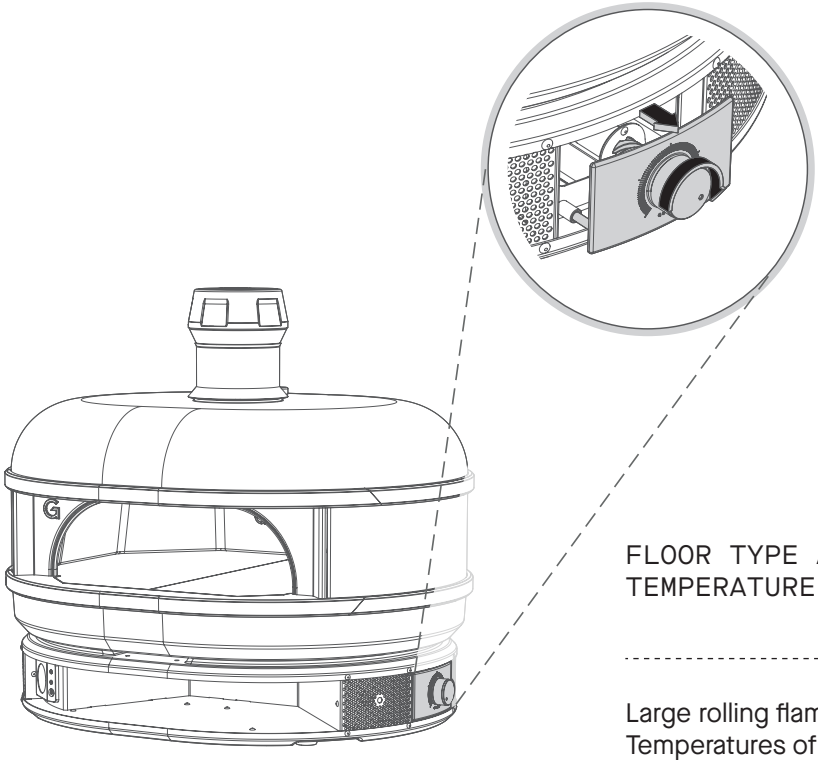

FLOOR TYPE AND TEMPERATURE

Large rolling flames. Temperatures of 750°F (400°C+)

Small flames. Temperatures of 400°F - 650°F (250°C - 350°C)

Embers, fires died down. >400°F (>200°C)

After moving the fire over the mesh puck turn the control dial on the ash tray to the fully open position. This allows more oxygen to get to the fire and will help you achieve a good rolling flame across the top of the oven. Always wear oven gloves when adjusting the dial on the ash tray.

## FINISHED COOKING

Allow the fire to die down until there are no naked flames and only embers remain. The door can then be placed in the closed position to retain heat.

## COOKING WITH WOOD TIPS

For the best results and ease of cooking, be sure to use kiln dried wood with a moisture content of 20% or less.

Standard logs (including kiln dried) should not be stored in a commercial kitchen. Only solid fuels that have been HACCP certified (Hazard Analysis and Critical Control Point) are permitted to be stored in commercial kitchen locations. Please contact Gozney Ovens for more information on HACCP certified fuels.

| RECIPE EXAMPLES | WOOD SIZE AND TYPE | USING THE DOOR |
|---|---|---|
| Fast cook times such as Neapolitan pizza. | Lots of small piece of kiln dried hard wood kindling.<br>1-2” (25 - 50mm) | DO NOT USE THE DOOR. |
| Finishing meats, charring vegetables or small items in a cast iron dishes such as lasagne. | Large pieces of kiln dried hard wood.<br>2-4” (50 - 100mm) | Ok to use door when ajar do not close or leave unattended. |
| Slow roasting meats or vegetables. Baking breads. | Fire left to die down after the oven has been saturated. | Ok to use door in closed or ajar positions. |

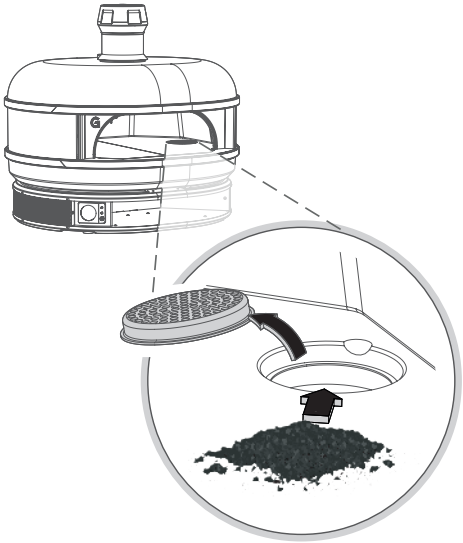

## ASH DISPOSAL

Ensure you wait until the oven is cool before attempting to remove the ash. Don't dispose of ash near or into anything flammable.

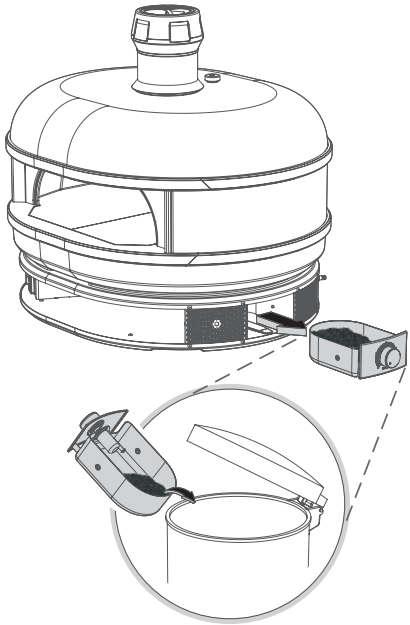

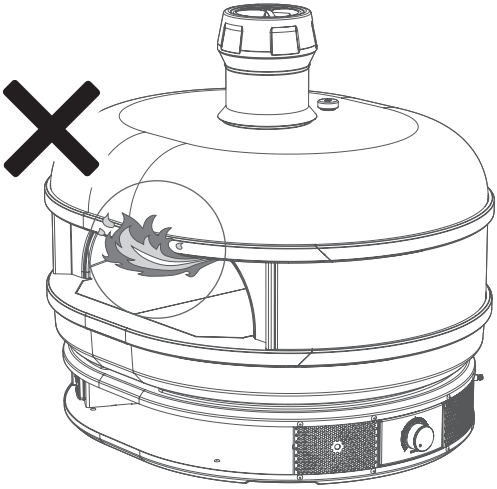

## FUEL OVERLOADING

Overloading is dangerous and can cause excess smoke and flame. There should never be flames coming out the mouth of the oven or up the flue, if this happens step away from the oven and wait for the fire to die down.

## REFUELLING ONTO A LOW FIRE BED

If there is insufficient burning material in the fire bed to light a new fuel charge, excessive smoke emission can occur. Refuelling must be carried out onto a sufficient quantity of glowing embers and ash that the new fuel charge will ignite in a reasonable period. If there are too few embers in the fire bed, add suitable kindling to prevent excessive smoke.

## CLEANING THE OVEN

The oven floor should reach temperatures of 650°F (360°C) to start "self-cleaning". To do this raise the temperature of the oven to above 650°F (360°C) for a period of three hours.

## ASH DISPOSAL

After 24 hours ashes can still be hot. When removing ash from your oven, a non-combustible tool must be used at all times.

- Ash should be placed in a metal container, with tight fitting lid and removed using a non-combustible ash shovel.
- The closed container of ashes should be placed in a safe place until thoroughly cooled.

Your guide to general maintenance.

# 4

# General Maintenance

# Cleaning The Oven

## INTERNAL

The best way to clean the inside of Dome is to burn off any food debris or soot that is left behind. When the oven is over 650°F (343°C) it will start self cleaning and any burnt on food will burn off after a period of three hours.

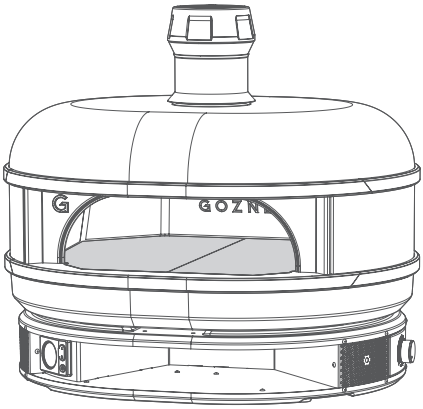


If there is any soot or debris left, wait for the oven to cool down and use a soft brush to dislodge, being careful not to apply too much pressure and damage the oven. Use a vacuum cleaner with a plastic attachment to remove the loose debris from the oven.

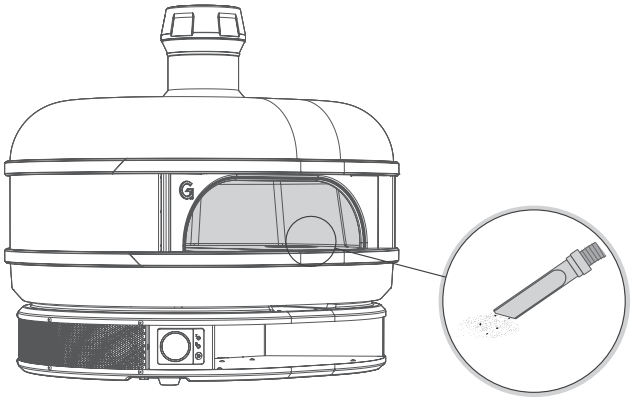

## EXTERNAL

For the exterior of the oven use a non caustic bleach free cleaning spray on the dirty areas. Clean the area with warm soapy water and a sponge or non abrasive dish cloth and then wipe clean with paper towels.

Avoid spraying directly onto the thermometer, control dial or meshed areas on the base of the oven.

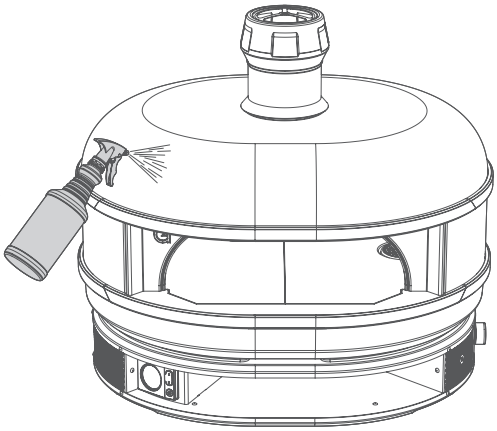

When the oven isn't in use it should be kept under cover away from rain. If you are placing a cover directly on Dome, ensure it's completely cooled down before covering.

When using the oven after a long spell of no use, we recommend firing the oven as if it is a first firing.

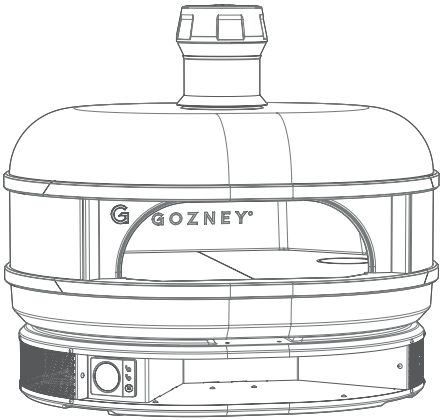

# Replacing The Probe

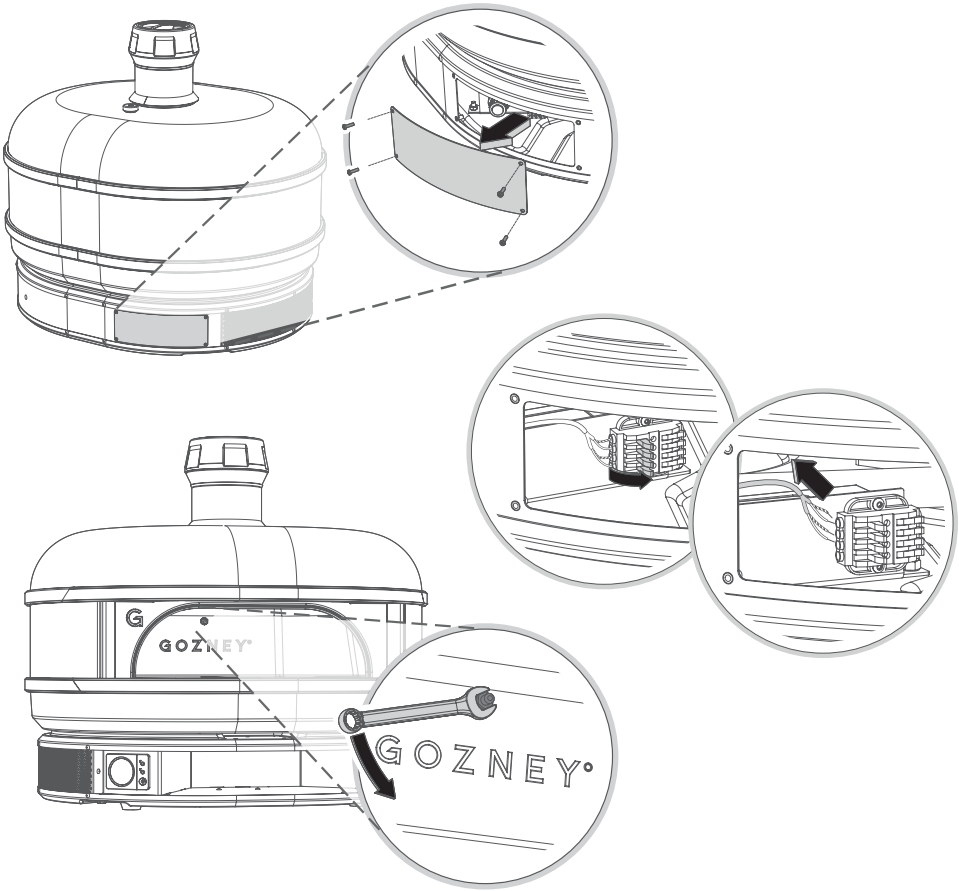


Only when the oven is cold, remove the rear panel to access the probe terminal. The terminal is held with a magnet so can be removed from the dock easily to gain better access. Lift all the levers on the left hand side of the terminal to release the probe wires. Unscrew the probe from inside the oven and pull the old probe out the mouth of the oven.

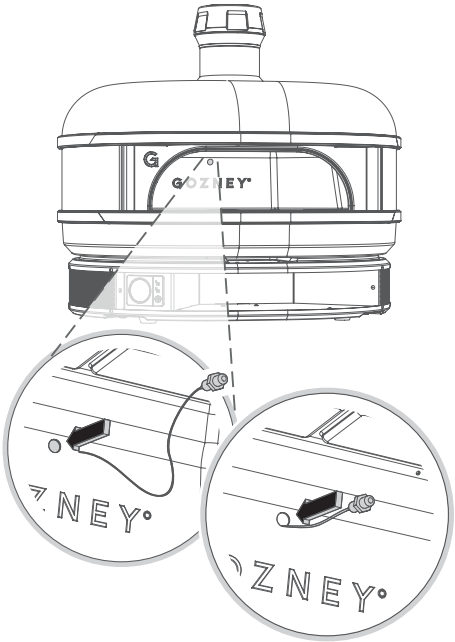


Push the new probe's wires into the hole and feed them through until they are visible from inside the rear panel. Hand tighten the probe in place, avoid using a spanner as you may damage the probe.

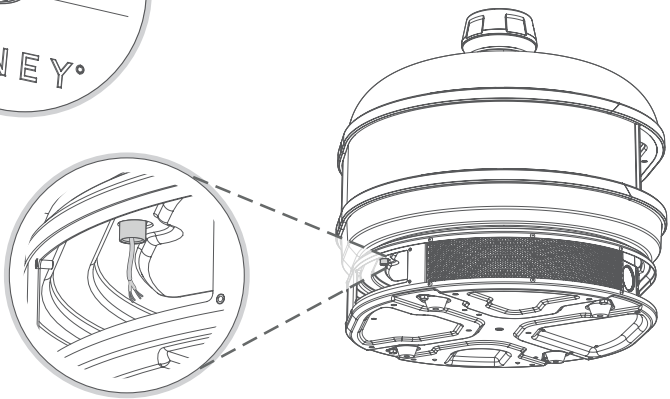

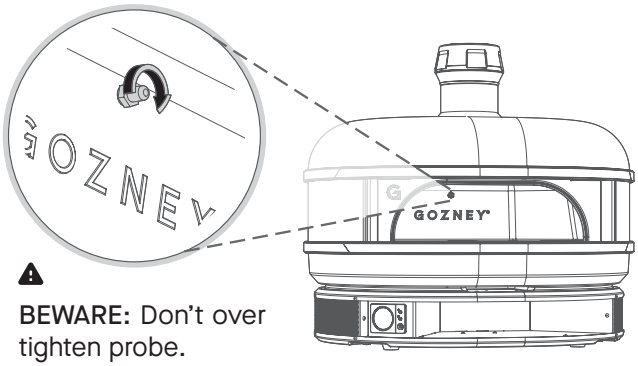


**BEWARE:** Don’t over tighten probe.

To wire the new probe, lift all the levers on the left hand side up and insert the wire into the holes on the side of the junction. The pattern/color of the wire should match the corresponding wire on the opposite side of the junction.

When the wire is fully inserted, push the lever back to its original position to clamp the wire in place. Ensure the wire is fully clamped in place before moving onto the next wire. Then reinsert the terminal into the dock and ensure the magnet engages with the metal plate.

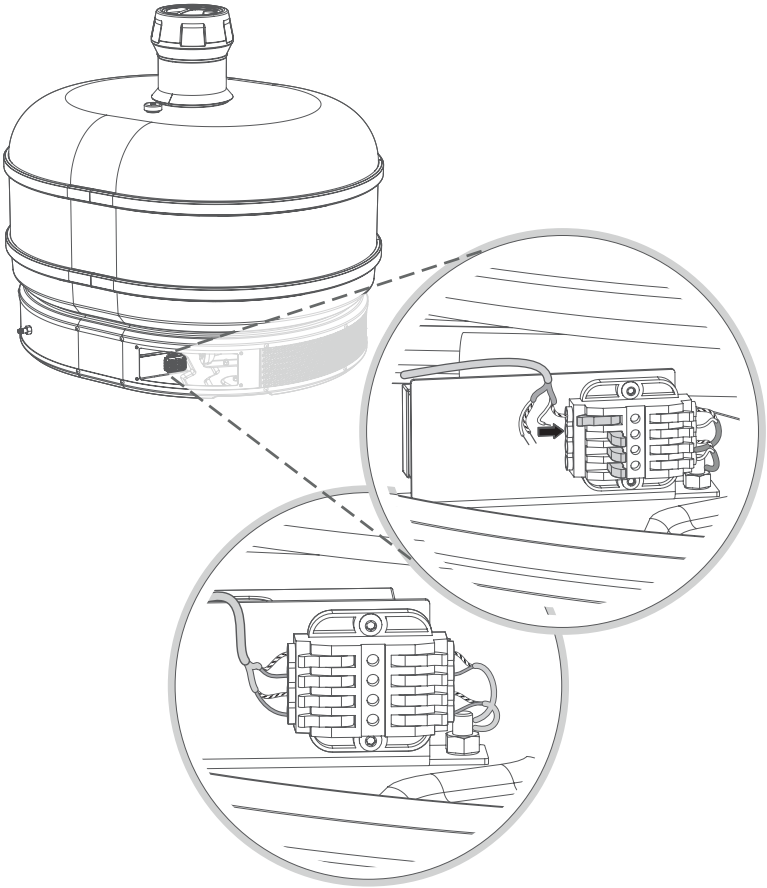

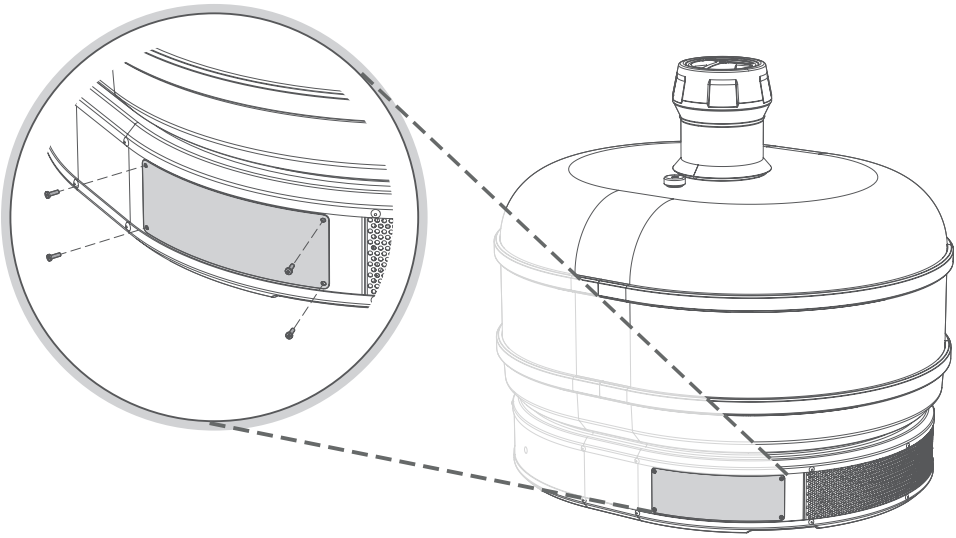

Double check the probe is functioning by checking the digital temperature display and return the panel to the back of the oven.

GOZNEY°