Technical Manual

Dome

GOZNEY®

US DOC-0027-02

Wood-fired cooking made easy.

Introduction

WARNING: If the information in these instructions is not followed exactly, a fire or explosion may result causing property damage, personal injury or death.

- Do not store or use gasoline or other flammable vapors and liquids in the vicinity of this or any other appliance. An L.P. cylinder not connected for use must not be stored in the vicinity of this or any other appliance.

- Post these instructions in a prominent location:

  What to do if you smell gas:

  - Do not try to light any appliance.
  - Do not touch any electrical switch.
  - Do not use any phone in your building.
  - Immediately call your gas supplier from a neighbor's phone. Follow the gas supplier's instructions.
  - If you cannot reach your gas supplier, call the fire department.
- Installation and service must be performed by a qualified installer, service agency or gas supplier.

WARNING: Improper installation, adjustment, alteration, service or maintenance can cause property damage, injury or death. Read the installation, operating and maintenance instructions thoroughly before installing or servicing this equipment.

This instruction manual contains important information necessary for the proper assembly and safe use of the appliance.

Read and follow all warnings and instructions before assembling and using the appliance. Follow all warnings and instructions when using the appliance. Keep this manual for future reference.

DANGER

If you smell gas:

Shut gas off to the appliance.

—

Extinguish any open flame.

—

If odor continues, keep away from the appliance and immediately call your gas supplier or fire department.

Dome gets extremely hot and should not be used by children. Do not allow children near the device during or after operation. Dome can stay hot for a few hours after use.

—

Do not use under any apartment or condominium balcony or deck.

—

Dome is not intended for and should never be used as a heater.

—

Dome has not been designed or intended to be used on a boat or within a recreational vehicle or any other form of confined area.

—

Assembly and operation of the oven should be carried out by a competent person.

—

The use of alcohol, prescription or non-prescription drugs may impair the consumers ability to assemble or operate the device safely.

—

Do not use any plastic or glass utensils within the oven.

—

Use heat-resistant gloves when operating the oven.

Do not insert items into Dome that are bigger than the dimensions of the oven mouth.

Do not over fill Dome or cover the burner.

—

Do not move Dome whilst in operation.

—

Do not operate Dome in strong winds. Winds can extinguish the flame and also cause irregular air pressure resulting in the flame and heat coming out the back of Dome. Use a wind break in open areas but keeping over 45cm away from the device.

—

Do not pour water on to the cooking stone as this will likely crack it and could be dangerous because of oil and grease.

—

Do not wear loose flammable clothing or sleeves near Dome.

—

Parts sealed by the manufacturer or the agent shall not be manipulated by the user.

—

Never use gas and wood simultaneously.

—

If the appliance is installed in a room ensure there is adequate ventilation to prevent high carbon monoxide concentrations.

—

Never operate this appliance unattended.

—

Never operate this appliance within 25ft of any flammable liquid.

—

Do not fill the cooking vessel beyond the limitation of the door dimensions.

—

Heated liquids remain at scalding temperatures long after cooking process.

—

For indoor installations please speak to your local ventilation company for advice and follow the separate ventilation and extraction guidance available from Gozney.

—

Ensure the oven is placed on a flat surface.

—

Do not block perforations provide for ventilation and heat dissipation.

—

For replacement parts go to Gozney.com.

Product Overview - What's in the Box

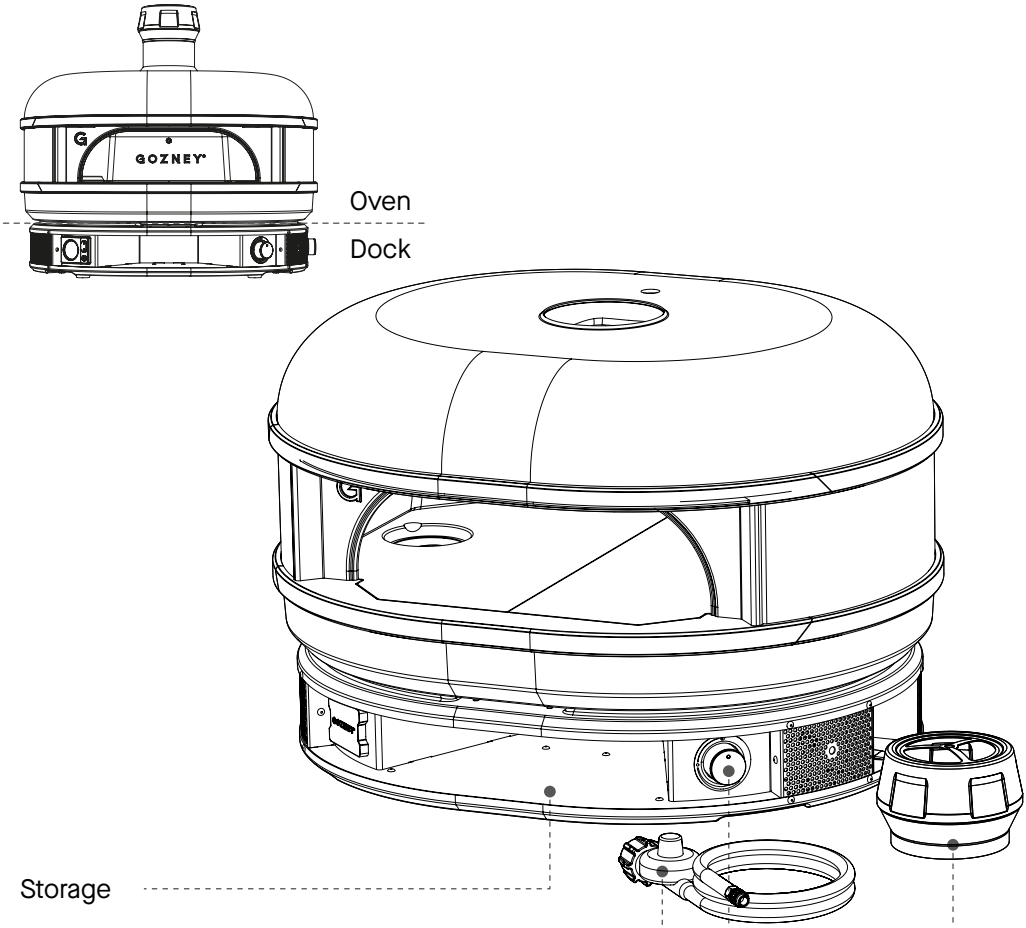

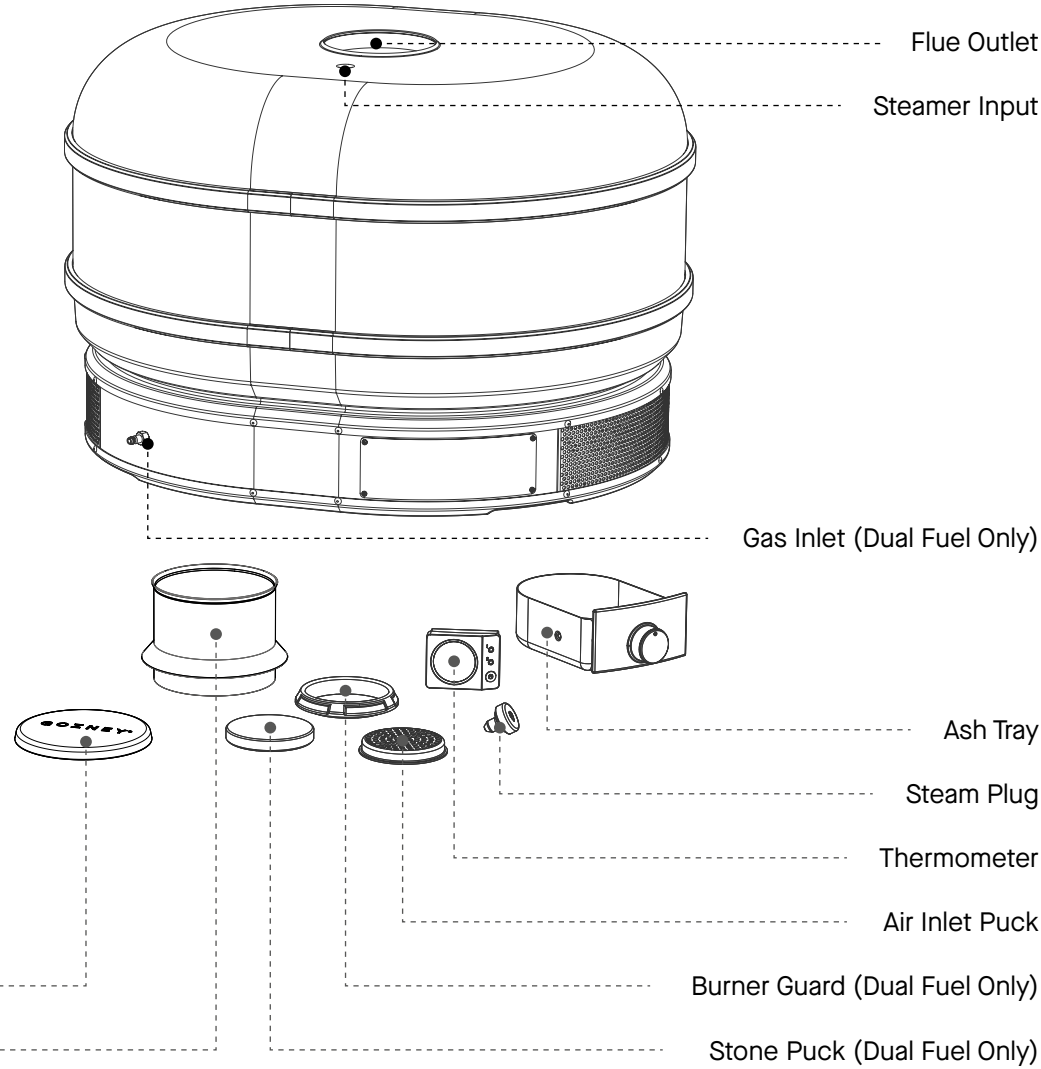
Flue Outlet
Steamer Input
Gas Inlet (Dual Fuel Only)
Ash Tray
Steam Plug
Thermometer
Air Inlet Puck
Burner Guard (Dual Fuel Only)
Stone Puck (Dual Fuel Only)

Gozney Limited, Units 18 & 19, Radar Way, Christchurch, Dorset, BH23 4FL UK.	
Appliance Name:	Gozney Dome
Model/Type No.:	4555-V1-02
Trade name:	Gozney Dome

LPG Configuration

Total nominal heat output for the gas burner	28000 BTU/HR
Injector Size	1.52mm
Gas Type	LPG
Gas Pressure	11 “W.C.

For use outdoors only.

Read the instructions before using the appliance.
WARNING: accessible parts may be very hot. Keep young children away.
WARNING! Do not use spirit or petrol for lighting or re-lighting! (for wood burner)

Natural Gas Configuration

Total nominal heat output for the gas burner	28000 BTU/HR
Injector Size	2.15mm
Gas Type	Natural
Gas Pressure	7 “W.C.

This section details the correct operation and install of a Gozney Dome.

1

Operation & Installation

SAFETY CONSIDERATIONS

WARNING: This appliance will become very hot, do not move it during operation.

Dome unit and the burner must always be well ventilated.

—

Do not spill or pour water onto the cooking floor. This is dangerous and can crack the stone

Do not cover oven mouth when there is an active flame, this will cause damage to the oven.

—

Product may contain sharp edges! Please use caution.

WARNING: Contact your local municipality for any building codes applicable to the use, installation and operation of outdoor cooking appliances.

Outdoor installations must conform to local codes or, in the absence of local codes, with the following standards:

Ensure all gas fittings are tightened as per instructions. Do not modify the appliance. Parts sealed by the manufacturer or the company shall not be manipulated.

FIRE

Most fires are caused by a build up of grease, or (if using gas) an improper gas connection. In the event of a fire ensure all people and pets are kept as far away as possible.

Use a fire extinguisher if possible, but if water is the only fire retardant available, thoroughly soak the area around the appliance. Do not spraying water on or in Dome itself, as this may cause splashing of burning grease, resulting in a further spreading of the fire.

CARBON MONOXIDE

Carbon Monoxide is a highly poisonous gas which can be produced when the device isn't receiving enough ventilation.

We therefore recommend using wood or gas fuels in a well ventilated area away from direct wind and to never cover the oven mouth when there is an open flame present.

It is difficult to know if your device is producing Carbon Monoxide as it is an odorless and colorless gas.

It can, however cause these symptoms when you are exposed to it:

- Tightness across the forehead
- Headache
- Weakness
- Dizziness
- Nausea
- Vomiting
- Coma, intermittent convulsions
- Depressed heart action, slowed respiration

If the exposure has been severe it may cause death.

Please follow local regulations and install a CO alarm if necessary.

This section details the set up of the oven and the accessories included with your Dome.

2

Set Up
& Accessories

Moving the Oven

The lifting straps located on the bottom of the oven are only suitable for single use. Please remove them once the oven is located to its final location and use hand holds below.

Do not move Dome whilst in operation or when it is still hot.

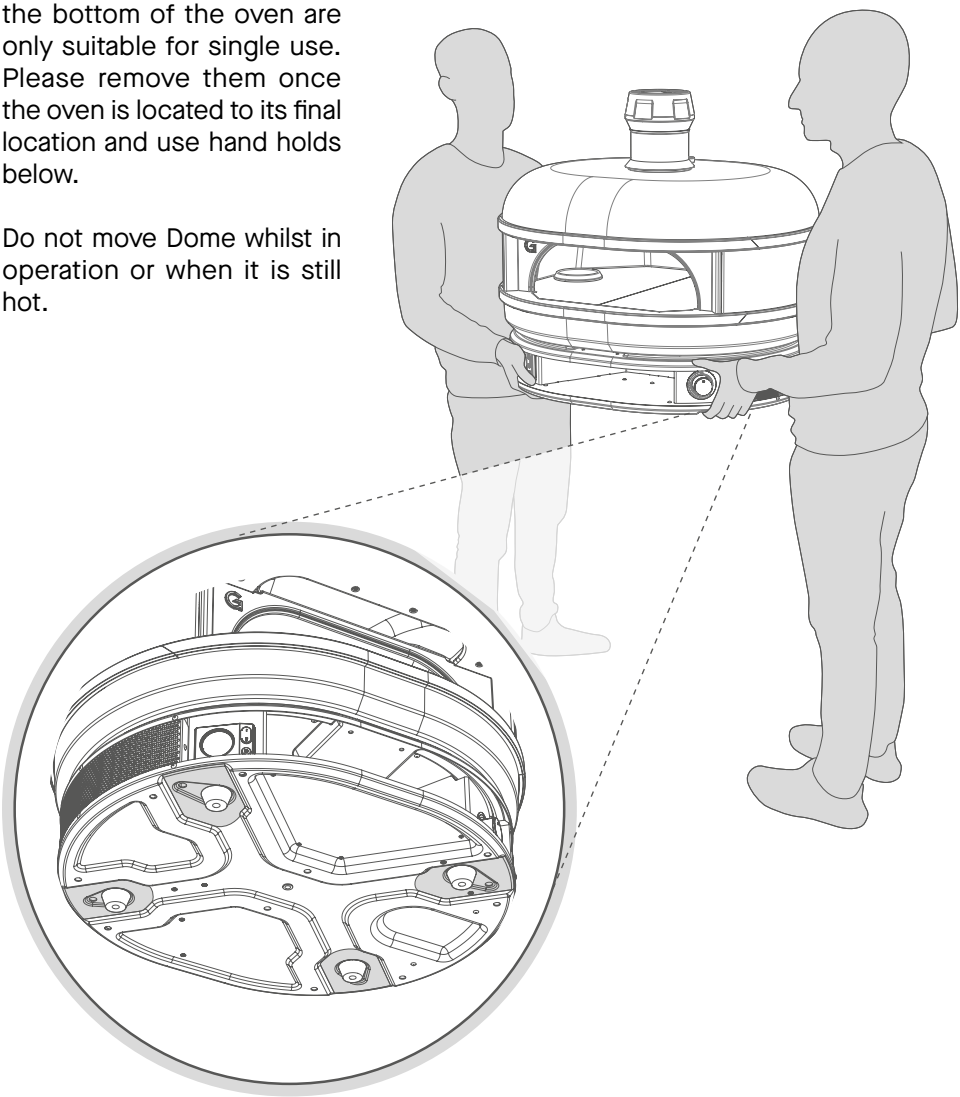

Never attempt to move the oven on your own. Two people should pick up the oven lifting from under the rounded ends of the oven, do not use the mouth of the oven as a lifting point.

Remove anything loose on the oven before moving.

Always plan the route you are going to take, remove any obstacles on your path and ensure the oven will fit through the intended route.

Ensure the area you are moving the oven to fits with the guidelines on the following page.

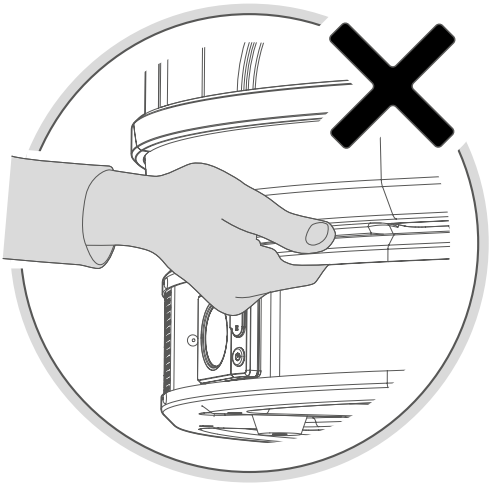

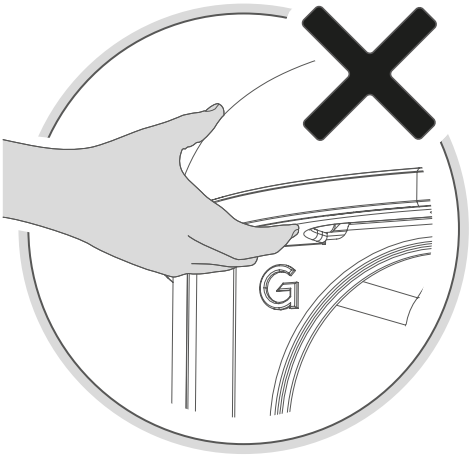

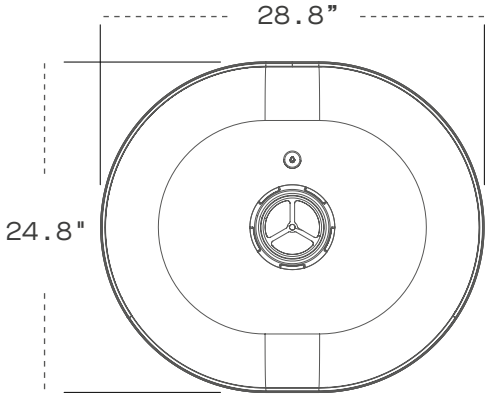

OVEN PLACEMENT

When deciding where to place Dome ensure the area is large enough to accommodate the oven with 2” (50mm) around the base of the dock for air intake. It is important nothing is blocking the meshed panels as this will affect the performance of Dome.

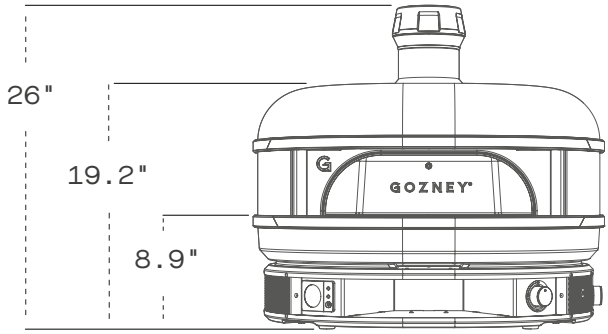

WARNING

When placing your oven it is important to maintain proper clearances from combustible construction. Ensure Dome has 1ft clearance (back and sides) and 3ft 4” clearance (front) from any combustible construction.

Under no circumstances is the oven to be placed under or on top of any combustible structure.

Always keep the area around the oven clear of any combustible materials, gasoline and other flammable vapors and liquids.

We recommend the height of the floor to be around the level of the bottom of the users elbow (usually around 3ft 11” from the ground)

Ensure the surface the oven is being placed on is completely level, stable and capable of easily holding the weight of the oven - 130lb.

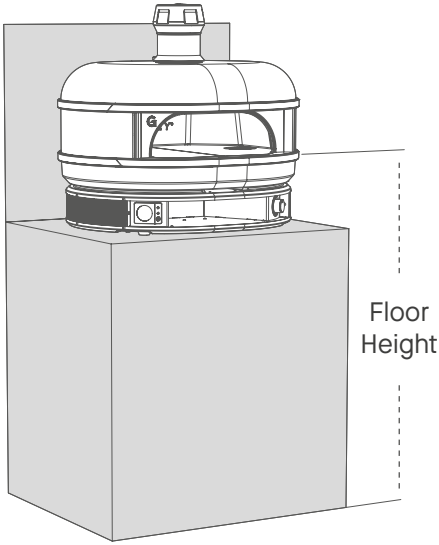

WARNING

Never operate the oven in high winds or if the wind is blowing into the oven mouth.

Wind should be taken into consideration when choosing a location. The oven should be orientated so that the mouth is facing away from the wind. Avoid using the oven in windy conditions, it is important to have wind breaks situated around the oven to stop the wind from blowing the flame down into the dock. If you see fire coming from the dock. Turn the oven off from either the gas bottle or control knob. Never operate the oven in high winds.

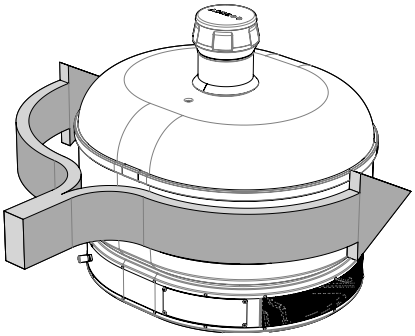

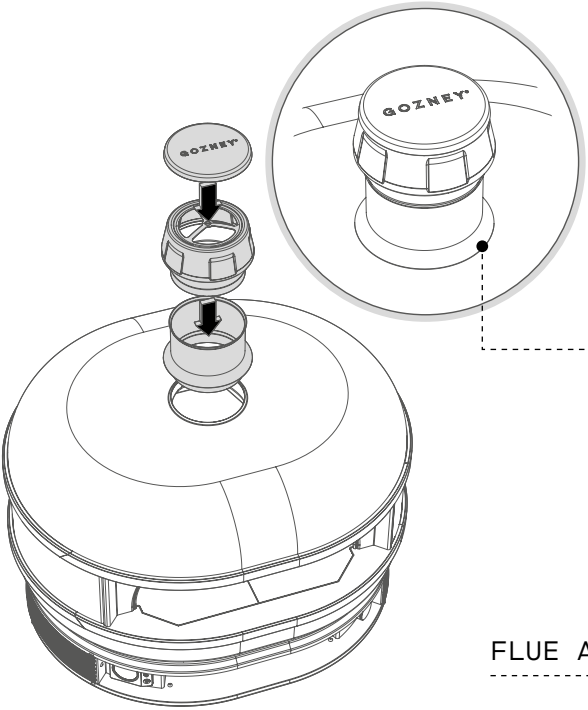

The flue is designed to have a rain guard which has a 1/4 inch gap from the dome.

FLUE ASSEMBLY

The rain cap prevents moisture from getting into the oven and should only be used when the oven is cooled and not in use.

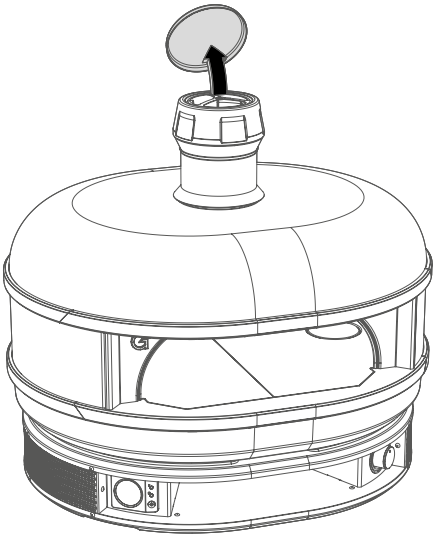

STEAM PLUG

The steam plug should always be inserted into Dome unless you are using the oven in conjunction with the steamer accessory.

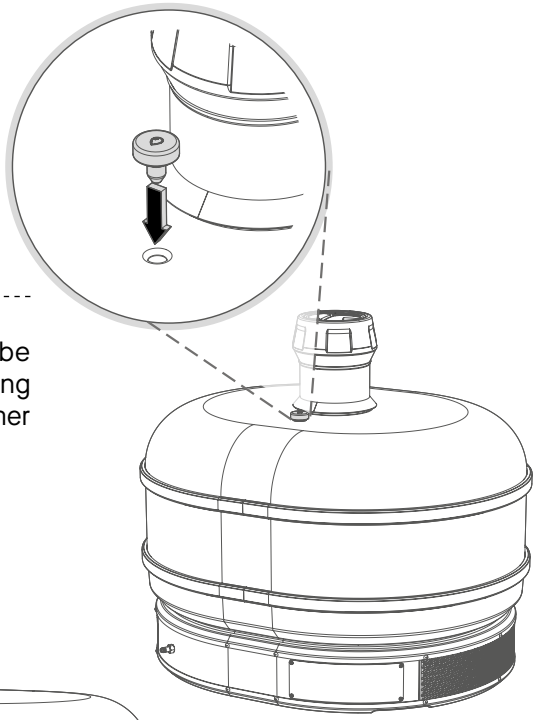

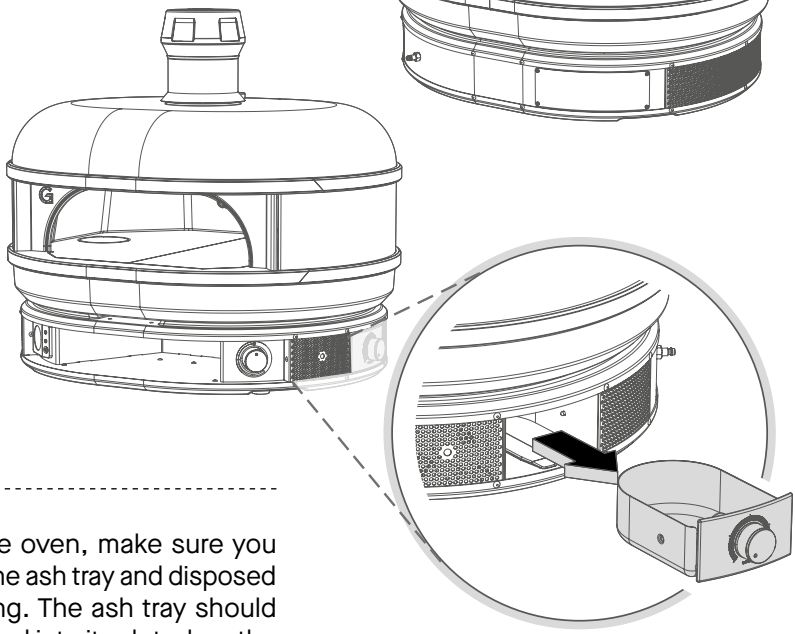

ASH TRAY

Before firing the oven, make sure you have removed the ash tray and disposed of any packaging. The ash tray should always be inserted into its slot when the oven is in use. See the “Firing up wood” chapter for further details.

Digital Temperature Display

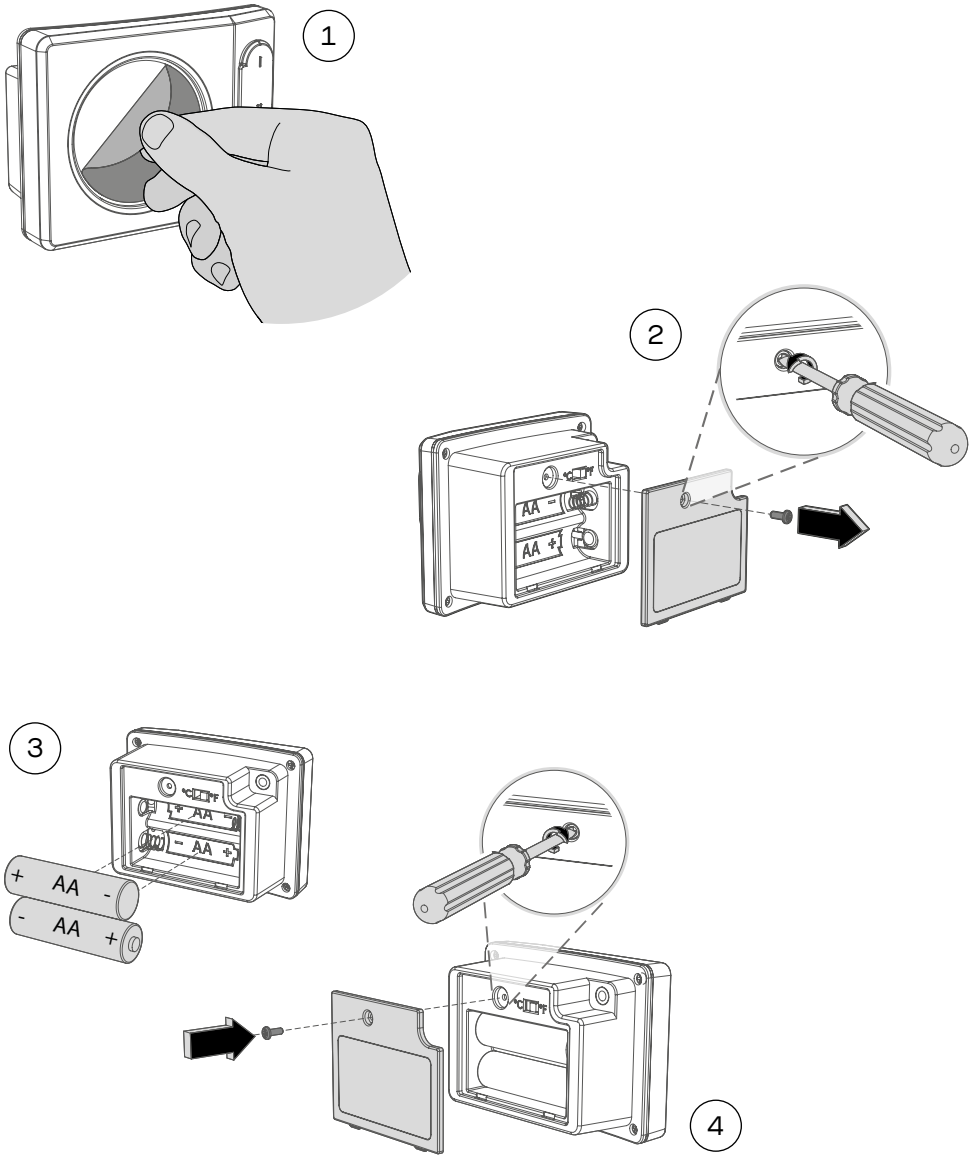

SETUP

After installing the batteries hold the power button down until the display turns on. Find the sensors jack by removing the plastic cap (if supplied) and plug it into the rear of the display, the screen will then show the temperature from within the oven.

Carefully feed the thermometer cable into the dock. The digital display is held in place with a magnet.

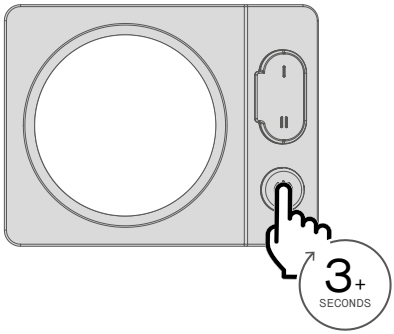

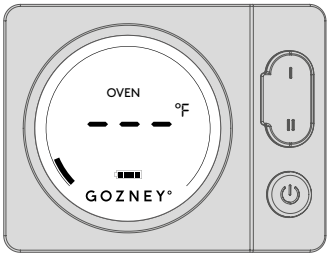

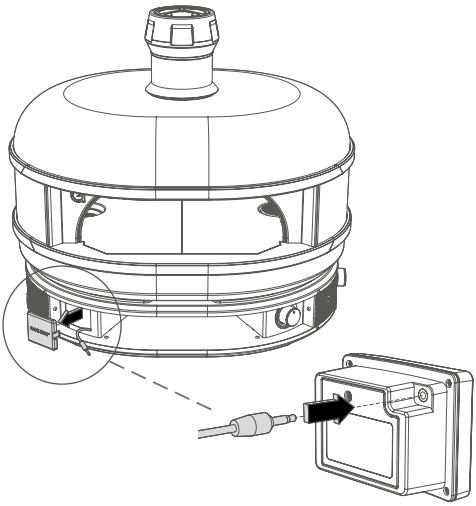

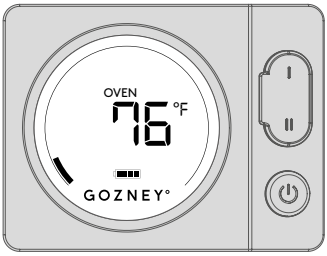

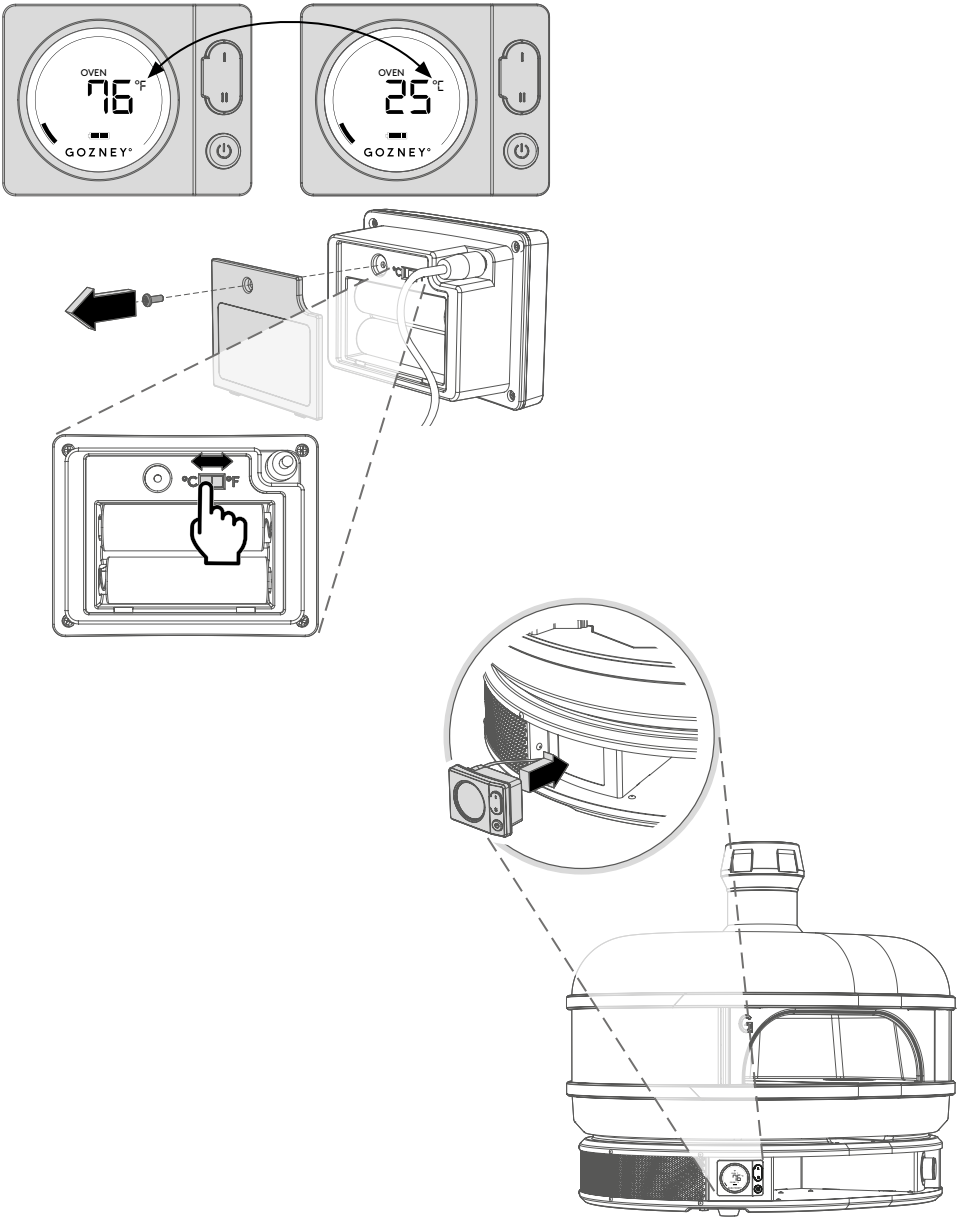
OVEN
76 °F
GOZNEY
OVEN
25 °C
GOZNEY
°C
°F

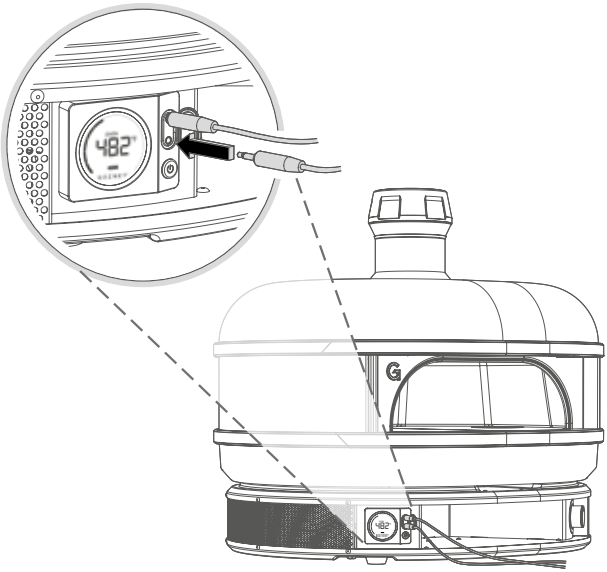

USING THE PROBES

When the temperature probes are connected to the screen, the display will automatically begin to cycle through the temperatures of the oven and the two probes.

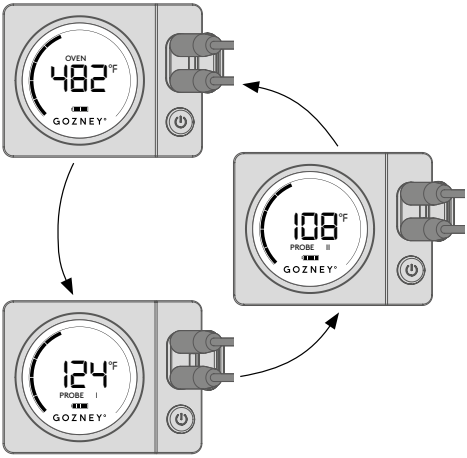

Digital Temperature Display Troubleshooting

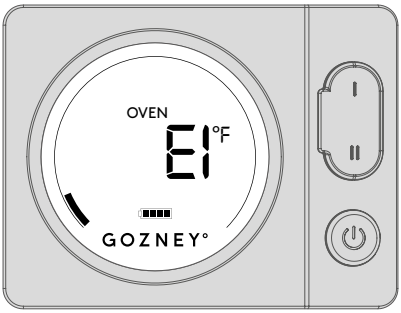

E1 ERROR CODE

If the thermometer is displaying an error code E1. This is caused by either:

1) A loose connection where the jack plug connects to the thermometer. Please ensure the jack plug is pushed fully in to the socket on the back of the thermometer.

2) Loose connection at the terminal. Please refer to maintenance instructions at the end of the manual.

3) Damage to the probe. The probe may need replacing. Please refer to maintenance instructions at the end of the manual.

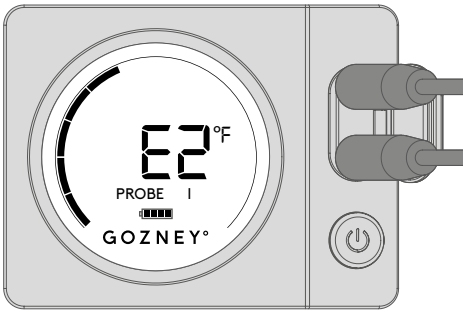

E2 ERROR CODE

If the thermometer is displaying an error code E2. This is caused by either:

1) A loose connection where the jack plug connects to the thermometer. Please ensure the jack plug is pushed fully in to the socket on the unit.

2) Damage to the cable. Visual inspect for kinks or chafe.

3) Water ingress on the cable can short the signal. Ensure the cable is dry.

Probes Guidelines

When using a meat probe the aim is to get the sensor to the coldest part of the meat to ensure the meat is cooked through.

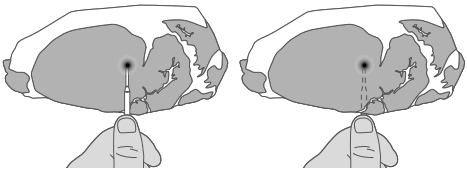

The coldest section of the meat will be in the center of the thickest part. Placing the probe on top of the meat and using your thumb as a depth guide is the best way to ensure the probe is positioned correctly.

For accurate readings the probe must be distanced from any bone, fat or gristle.

PROBES CARE & USAGE

Before the first use and after subsequent uses, clean the probes with hot soapy water and dry thoroughly. Avoid immersing the probes in water whilst cleaning. The probes are not suitable for the dishwasher.

To prolong the life of the probes always store them indoors in between uses and ensure the silicone plugs are firmly pressed into the jack openings on the thermometer.

Keep the probes and their leads away from the flames. Direct contact with fire will damage the device.

FDA Safe Minimum Internal Temperatures
(as measured with a food thermometer)

FOOD	TYPE	INTERNAL TEMP.
Ground Meat	Beef, Pork, Veal, Lamb	160°F
	Turkey, Chicken	165°F
Fresh Meat	Beef*, Veal*, Lamb*, Pork*	145°F
	Poultry	165°F
	Fish with fins	145°F

* Minimum rest time of 3 minutes

Your guide to burning gas.

3

Firing Up Gas

Connecting to Gas

Check that the gas you are using is specified on the data plate page.

The gas cylinder used must have a safety collar to protect the valve assembly. Do not use a cylinder that is rusty, dented or has a damaged valve.

We recommend using a 28lb gas bottle in conjunction with Dome.

Gas cylinder must be constructed and marked in accordance with the specifications for LPG cylinders, U.S. Department of Transportation (DOT) or the Standard for Cylinders, Spheres and Tubes for the Transportation of Dangerous Goods, CAN/CSA-B339 or subsequent.

Connect the regulator to the gas canister, following the instructions for your regulator accordingly. Do not force the regulator as this could damage the gas bottle.

If the gas grill is being supplied with propane from a portable cylinder, a regulator specified by the manufacturer must be used. The gas regulator must supply a pressure of 11 inches water column (0.39 PSI) to the gas grill and have a QCC1 type fitting.

Never fill the cylinder beyond 80 percent full. If the preceding information is not followed exactly, a fire causing death or serious injury may occur.

WARNING: If at any point you smell gas: Shut off the gas from the cylinder, turn off the switch on Dome and extinguish any open flames.

If odor continues, move away from Dome and gas supply then contact your gas supplier or fire service.

Ensure that the LPG cylinder or regulator valve is closed.
Do not store a spare LPG cylinder under or near this appliance.

Cylinder Connection: Ensure the gas regulator hose is kink free. Remove the cap or plug from the cylinder fuel valve. Insert the black QCC1 regulator nipple onto the QCC1 fuel valve. Hand tighten clockwise. Do not use tools. Leak test all joints prior to using the grill. A leak test must be performed annually and each time a cylinder is hooked up or if a part of the gas system is replaced.

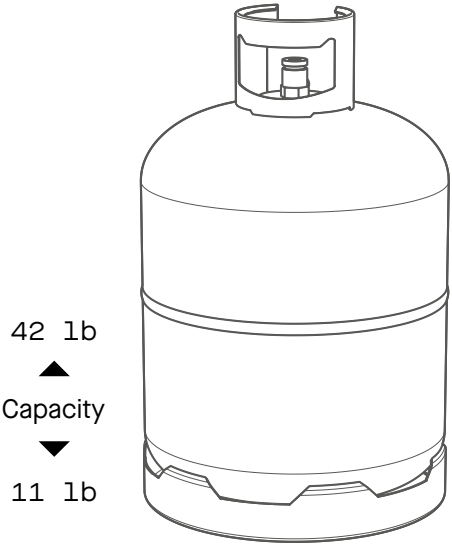

Gas Safety

Prior to use, check the oven, burner and venturi for blockages (e.g. food residue or insect nests - Wasps, Bees or Ants.) If an insect nest is found they can be dangerous and must be cleaned out thoroughly. Please refer to the cleaning and maintenance section for guidance.

Should the appliance extinguish for any reason, turn off the control knob and the cylinder gas valve. Wait 5 minutes before attempting to relight the appliance.

Some foods produce flammable fats and juices. Therefore Dome oven should be attended at all times whilst being used. Damage caused by fat and grease fires is not covered by warranty. If a grease or fat fire should occur, immediately turn off burner knob and the gas cylinder valve until the fire is out. Remove all food from the appliance.

A leak test must be carried out prior to using the appliance for the first time and whenever the gas cylinder is refilled or whenever the gas hose and regulator have been disconnected from the gas cylinder or appliance.

Remove all packaging before attempting to light the gas burner.

Please take a moment to review all of the safety requirements before operating the appliance when using gas.

⚠
Remove the cap from the gas inlet before connecting the hose. Make sure it is free of damage and debris.

⚠
Do not disconnect any gas fittings while the appliance is operating.

⚠
Check all gas hose lines and connections for cuts, cracks and other damage before each use. If there is excessive abrasion or wear it just be replaced with a Gozney approved hose assembly before use.

⚠
Gas cylinders must not be stored in enclosed areas.

⚠
Keep the fuel supply hose away from heated surfaces or direct sunlight.

⚠
Do not use any additional flammable substance whilst operating with gas.

⚠

Do not touch! Dome can get extremely hot when in operation. Be sure to wear protective gloves when operating the oven.

⚠

Keep the cylinder outdoors in its upright position.

⚠

Do not connect multiple gas canisters to Dome or store a spare within the same vicinity.

⚠

Do not position the gas canister under the oven.

⚠

Never use a naked flame to check for gas leaks.

⚠

National requirements state how often to replace the hose. Please review this for your area.

⚠

Make sure the flexible tube is not twisting when the appliance is in operation.

⚠

During any pressure testing of the gas system at test pressures in excess of 0.5 PSI (3.5 KPA), the shut-off valve must be disconnected from the gas supply piping system.

⚠

NEVER cover slots, holes, or passages in the oven bottom or cover an entire dock with material such as aluminum foil. Doing so blocks air flow through the oven and may cause carbon monoxide poisoning. Aluminum foil linings may trap heat causing a fire hazard.

⚠

The deck/stone cooking surface of the oven is intended for cooking pizza and bread products only.

⚠

The installation of your oven must conform with local codes or, in the absence of local codes, with the National Fuel Gas Code, ANSI Z223.1/NFPA 54 or, in Canada, the Natural Gas and Propane Installation Code, CSA B149.1.

⚠ WARNING

NEVER user this appliance as a space heater to heat or warm the room. Doing so may result in carbon monoxide poisoning and overheating of the oven.

⚠

Do not use the door when the gas burner is running. Never cover the mouth of the oven when the gas burner is in use.

⚠

Storage cabinets are not permitted above the oven.

⚠

Do not use the oven cooking area as storage.

Indoor Use

⚠

For indoor LPG or Natural gas installations a qualified gas engineer will need to be called to install the appliance to national and local codes.

⚠

These appliances are to be installed with sufficient ventilation to prevent the occurrence of unacceptable concentrations of substances harmful to health in the room in which they are installed.

⚠

This appliance is not connected to a combustion products evacuation device. It shall be installed and connected in accordance with current installation regulations. Particular attention shall be given to the relevant requirements regarding ventilation. - Seek advice from your local professional ventilation company.

⚠

CAUTION: The use of a gas cooking appliance results in the production of heat, moisture and products of combustion in the room in which it is installed. Ensure that the kitchen is well ventilated especially when the appliance is in use: keep natural ventilation holes open or install a mechanical ventilation device (mechanical extractor hood).

⚠

It is important to service the oven extraction device regularly. Failure to do so may result in a fire. Contact your local professional ventilation company for more details.

Contact Gozney for more information on ventilation and installation

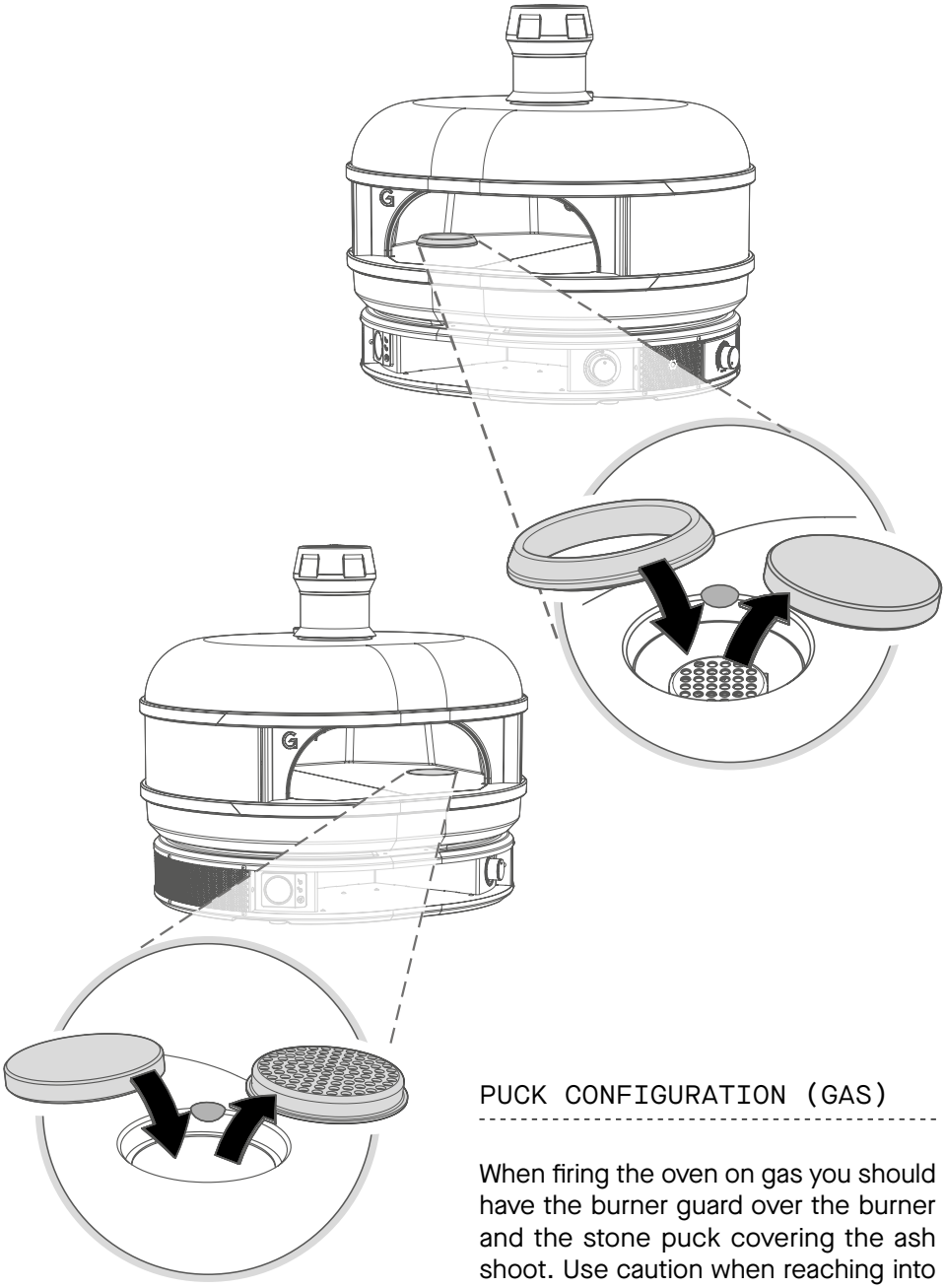

PUCK CONFIGURATION (GAS)

When firing the oven on gas you should have the burner guard over the burner and the stone puck covering the ash shoot. Use caution when reaching into the oven as burner holes may have sharp edges.

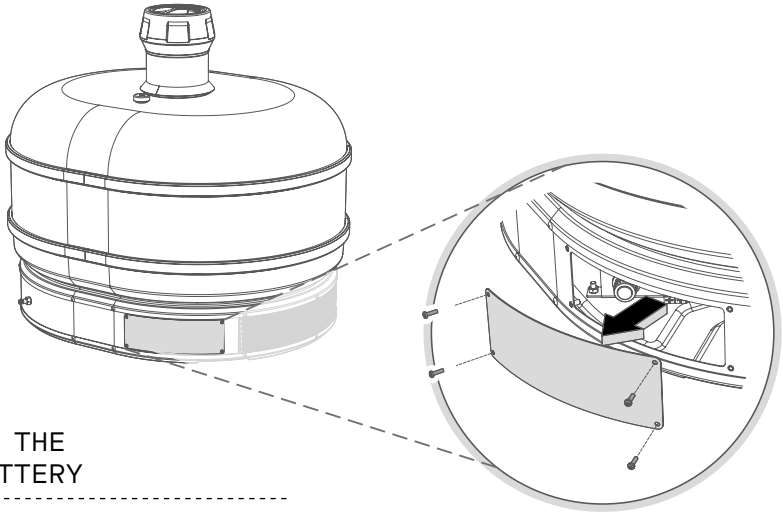

INSTALLING THE IGNITER BATTERY

Before using the gas burner for the first time you'll need to install an AAA battery into the ignition module. To do this remove the rear panel on the dock to find the module. Unscrew the cap and place the battery in (negative end first). Replace the cap and panel and you're ready to connect the gas bottle to the oven.

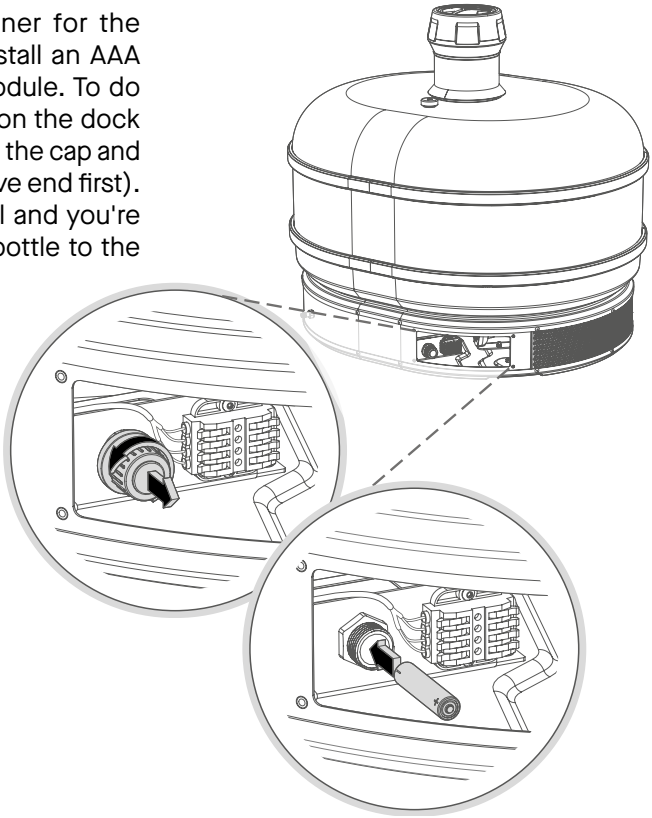

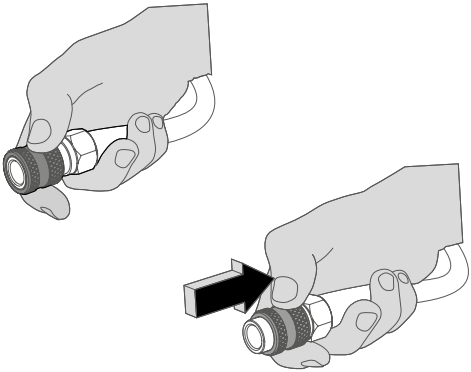

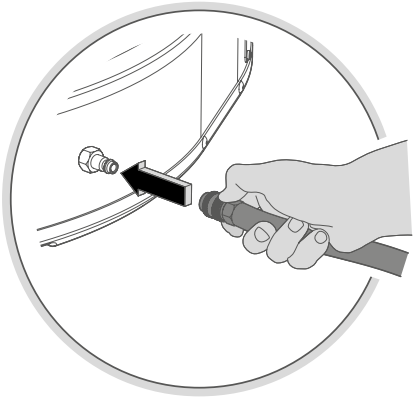

CONNECTING THE GAS HOSE

To attach the quick connection gas hose to your Dome pull the collar back on the connector and place the hose onto the gas inlet. When you release the collar it should return to its original position freely. This connection must be tested for leaks before using the oven.

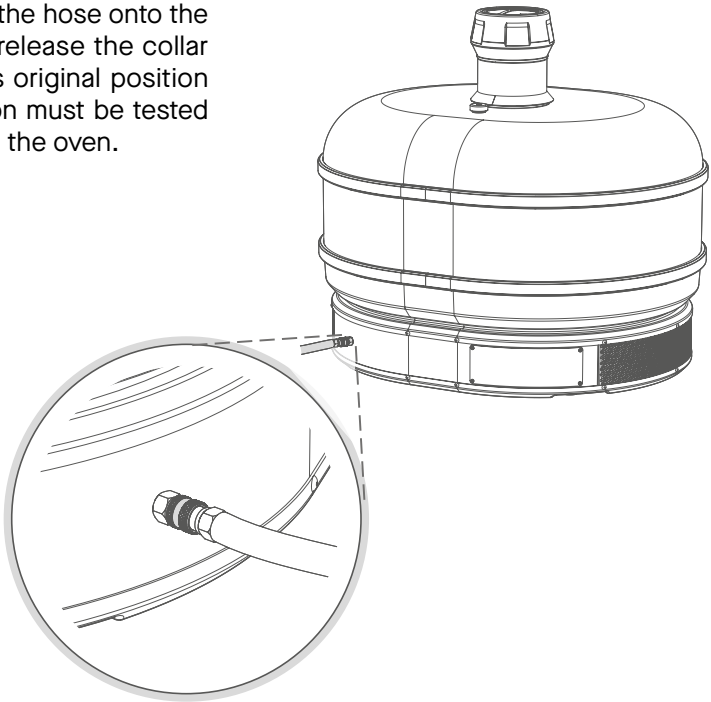

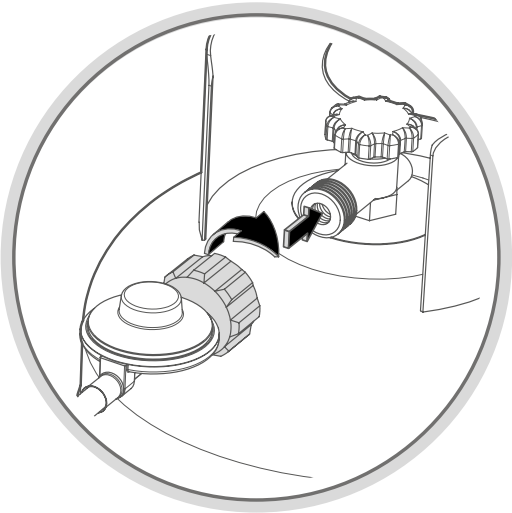

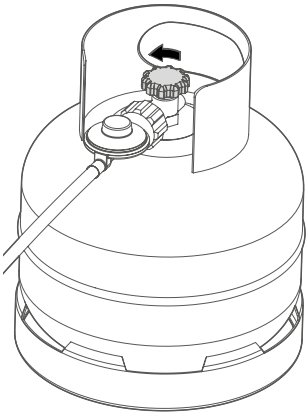

CLOCKWISE REGULATOR

Ensure the gas bottle is turned off. Align the regulator and the gas bottle threads and carefully begin to tighten ensuring the threads aren't crossed. Continue to tighten until a tight fit has been made. This connection must be tested for leaks before using the oven.

Testing For Leaks

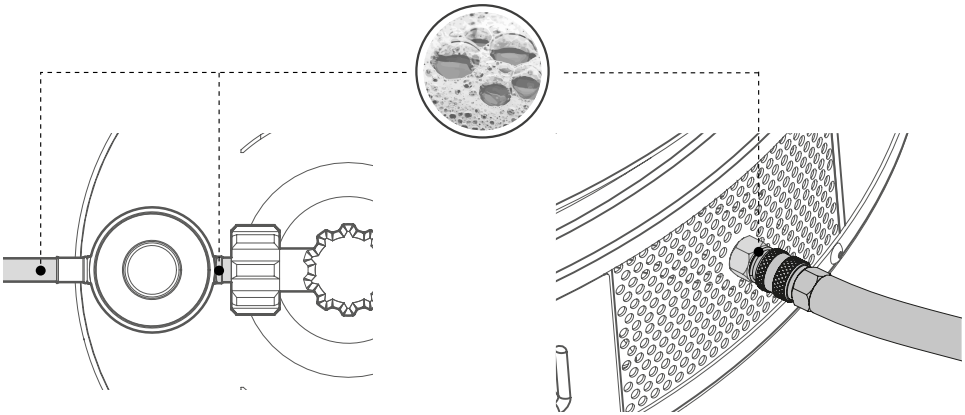

WARNING

You should always check for gas leaks every time you disconnect and reconnect a gas fitting. Never ignite burners when leak checking.

To test for gas leaks, apply a mixture of soapy water with a brush to the highlighted areas and any cracks along the hose. If a leak is present the solution will bubble.

If there is a leak at the hose to oven connection, re-tighten the fitting with a spanner and check for leaks by applying a soap-and-water solution to the highlighted areas with a brush. If a leak persists turn off the gas and DO NOT OPERATE THE OVEN.

If there is a leak at the valve connection, remove LPG cylinder. Do not operate oven. Use a different LP cylinder and recheck for leaks with the soap-and-water solution.

Pilot Light Ignition

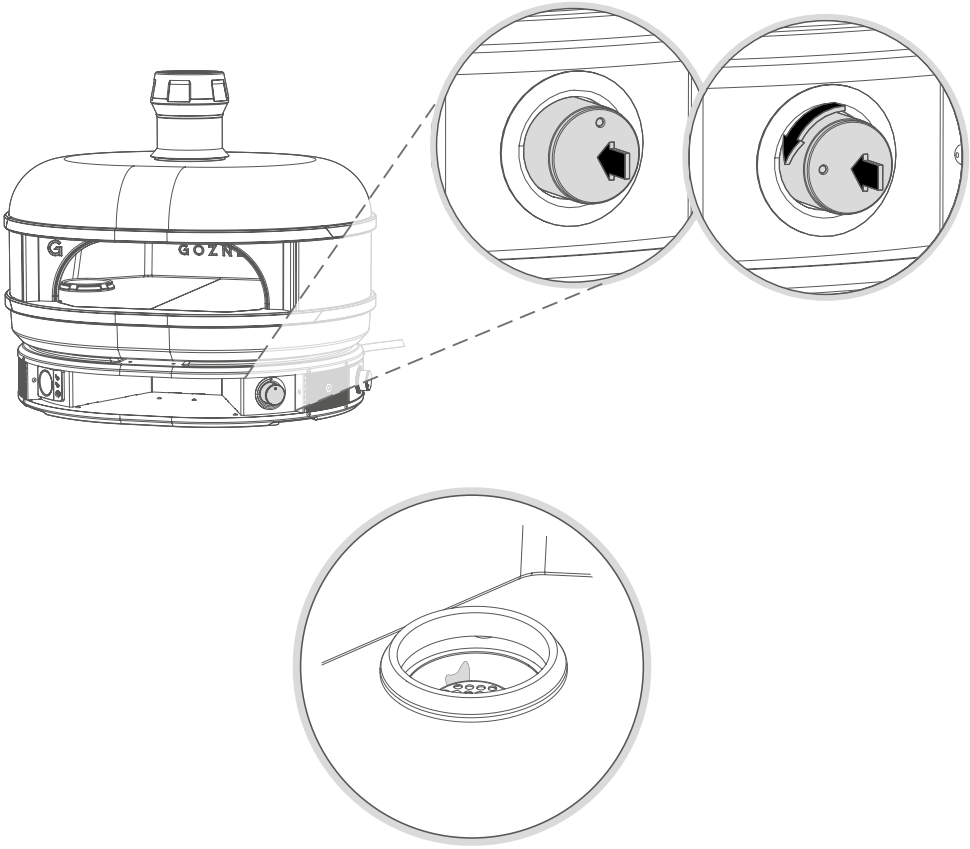

Note on first firing on changing a gas cylinder you may need to push the control knob in for an extended period of time. To allow gas to flow from the bottle to the pilot assembling.

To ignite the pilot light press the control knob in until you hear a constant clicking sound. Then, still pressing, turn the knob 90° and hold it there until the pilot light is lit. You may not be able to see the naked flame but there should be clear reflections of it on the internal sides of the oven.

First Firing

Only when you have a pilot light, turn the control dial counter-clockwise and the burner should light. On your first firing we highly recommend to put the burner on a medium to low flame for 30 minutes to help cure the oven before moving to a high flame.

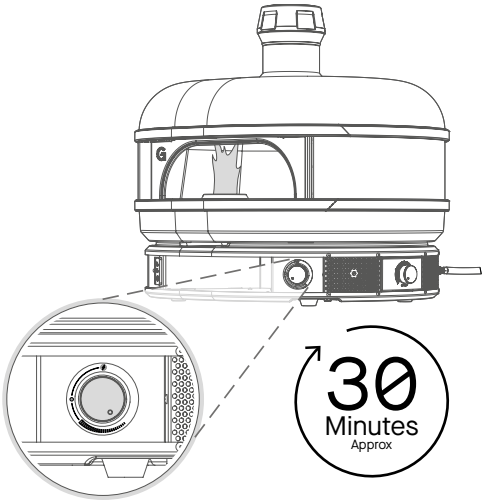

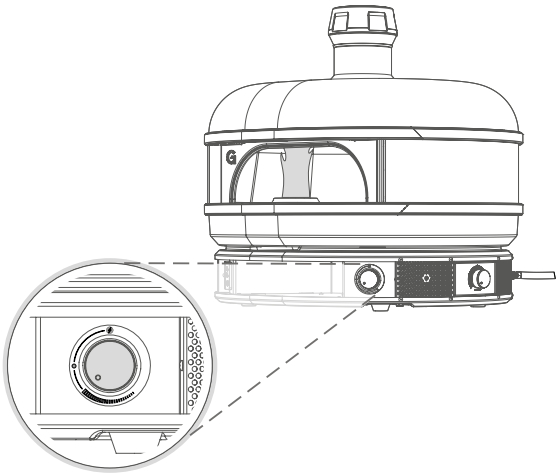

On subsequent firings after curing, you can bring the oven up to the desired temperature from ignition. If the oven has been dormant for an extended period, you should cure the oven again as if it was a first firing.

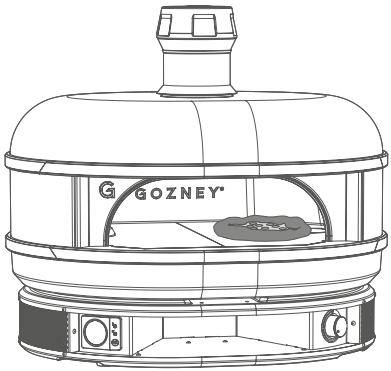

Gas Flame

The flame should be yellow in color and roll along the top of the oven.

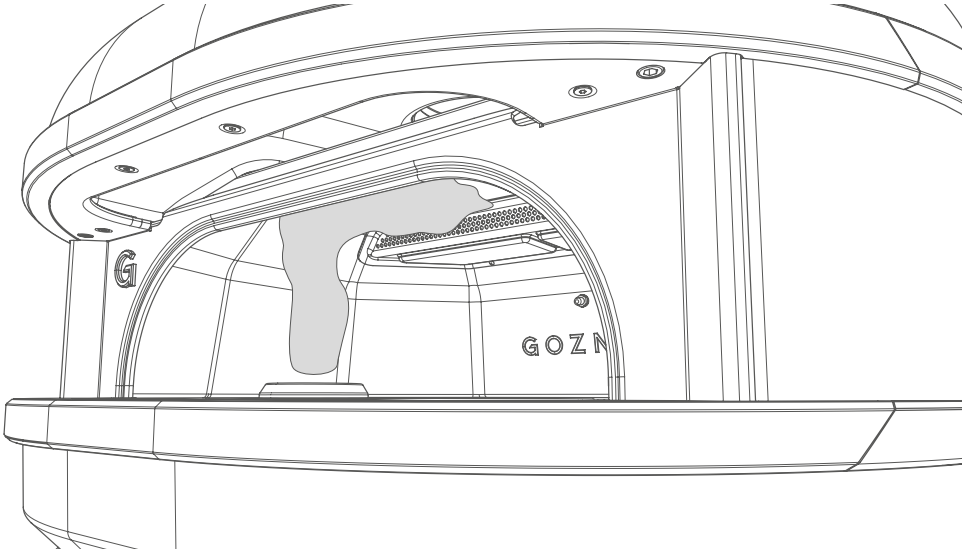

Troubleshooting Gas Burner

Problem Observed	Possible Reasons	Solution
Flame looks too small	• Gas cylinder is near empty • Gas cylinder is too small • Ambient temperature is below 0°C • Blocked burner	• Try replacing the gas cylinder if it is empty. • The cannister maybe too small. We recommend a 9kg canister as a minimum. • If the ambient temperature is below 0°C it is to be expected that a loss of power from the gas canister will occur. • The burner could be blocked, please refer to cleaning instructions available in this manual.
Failure to ignite	• Ignition battery is empty • Blocked burner • Gas canister is empty	• If firing for the first time or replacing a gas bottle the burner can take up to 30 seconds for the gas to flow through the system. Keep the control knob on until the pilot light has ignited. • If the control knob is not making a clicking sound when pushed in try replacing the battery at the back of the unit. Review the maintenance section within the manual for help and guidance on this.
Noisy Flame	• Incorrect ignition • Blocked Burner	• If the burner is making a loud grumbling sound first turn the burner down to low flame and then back to high. If the sound continues turn the burner off for 5 minutes and retry igniting it. If the problem persists, review the cleaning and maintenance instructions to remove debris in the burner.

If the problem persists after trying the following solutions please contact Gozney for further support.

Disconnecting Gas

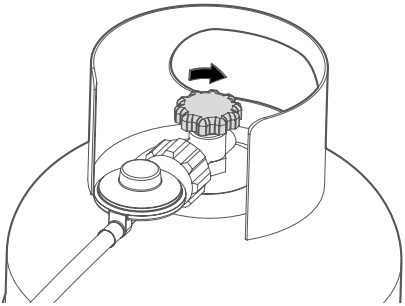

CLOCKWISE REGULATOR

After cooking, be sure to turn off the gas from the gas canister first before turning of Dome. This will allow any gas left in the burner or pipe to be used up safely. Three minutes after turning the gas off it will be safe to remove the regulator and turn the control dial back to the off position.

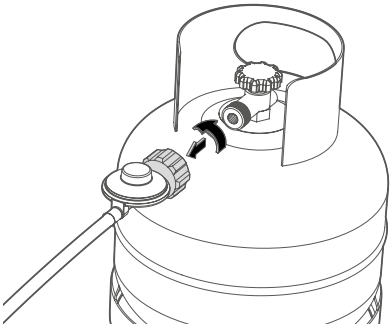

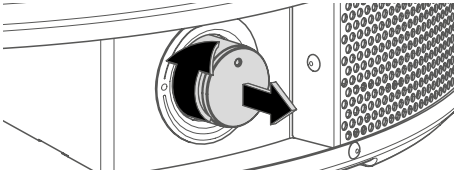

⚠

Before each fire up it is recommended to check for insects and insect nests within the burner tube. A clogged tube can lead to a fire beneath the oven.

Maintenance

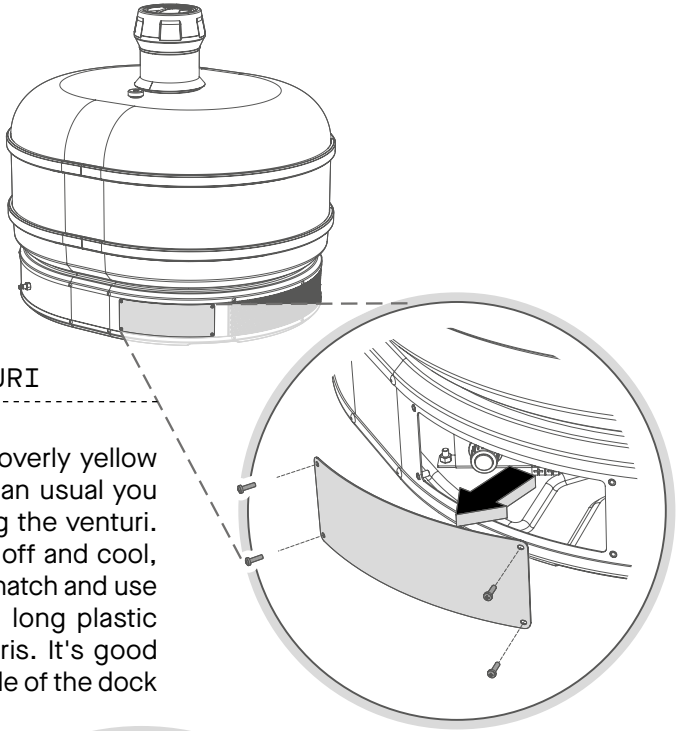

CLEANING THE VENTURI

If your burner's flame is overly yellow or making more noise than usual you may have debris blocking the venturi. When the oven is turned off and cool, remove the maintenance hatch and use a vacuum cleaner with a long plastic nose to remove any debris. It's good practice to check the inside of the dock for debris regularly.

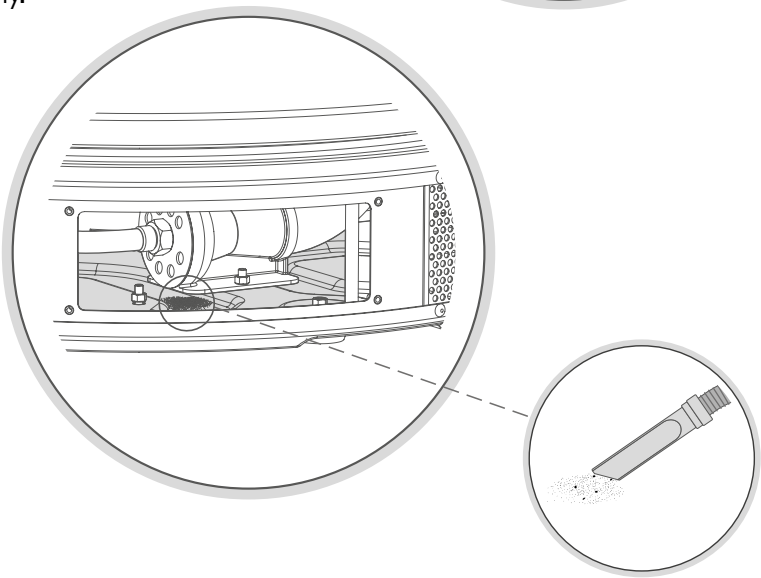

This section details safety considerations and how to get the most from your oven when firing on wood.

4

Firing Up Wood

First Firing

INTRODUCTION

When firing the oven for the first time, it is important to slowly bring the oven up to temperature. This will help prevent thermal shock to the stone floor.

WOOD SAFETY

Do not use spirit or petrol for lighting or re-lighting!

—

Do not use treated or painted wood.

—

Do not use soft woods (pine and sappy woods) or freshly cut wood.

⚠

WARNING: Before lighting the oven, ensure you have adhered to the extraction specified in this manual. If you are unsure, do not use the oven.

⚠

Never use flammable liquids including, but not limited to, barbecue lighting fluid, petrol or lighter fluids to start or boost a fire in this oven. Keep all such liquids well away from the oven while it is in use. Never use unapproved fuel in your oven.

⚠

Do not throw wood against the back or side walls of the oven, this may void the warranty.

⚠

WARNING: Do not pour or spray liquids onto the oven floor or into the oven interior as this can damage the oven and could void warranty.

⚠

CAUTION: Dispose of ashes in a safe manner, beware of hot embers even after the oven has cooled.

Wood To Use

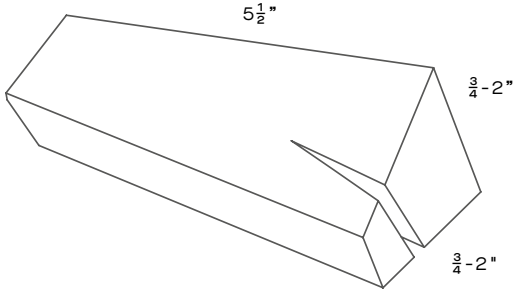

Wood is the most important factor when firing the oven on wood. It will determine the level of performance you will get from the oven.

SIZE

Smaller is better, we recommend using small pieces of kindling at 51/2 inches by 3/4 - 2 inch by 3/4 - 2 inch.

MOISTURE CONTENT

16% is the optimum moisture level for your wood, but anywhere between 10-20% is good.

TYPES OF WOOD

Kiln dried hard woods are best as they are dense and have a lot of energy to burn and will produce more heat than soft woods. Avoid using sappy woods and soft woods like pine as they tend to produce creosote which can build up in your burner and oven.

WOODS TO USE

- Ash
- Alder
- Oak
- Beech
- Hickory
- Fruit trees, Apple, Pear etc

WOODS NOT TO USE

- Pine
- Fir
- Cedar
- Redwood
- Spruce
- Fatwood
- Processed woods e.g.: painted or stained wood
- Sappy wood

Wood Fire Set Up

When firing the oven on wood you should have the stone puck covering the burner hole and the mesh puck over the ash shoot.

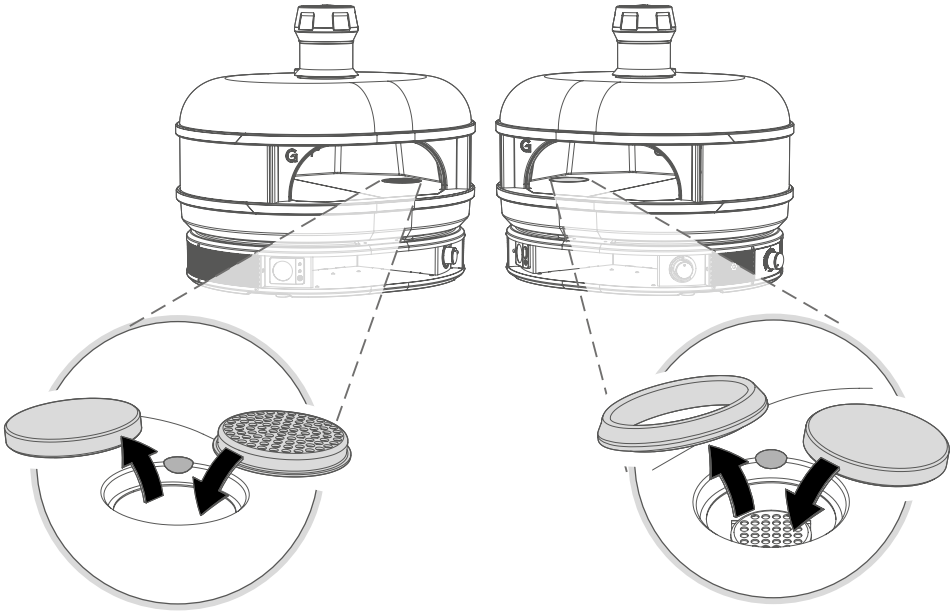

Fire Starting

On first fire up follow the below procedure but ensure the fire kept at a moderate level for 30-60 mins.

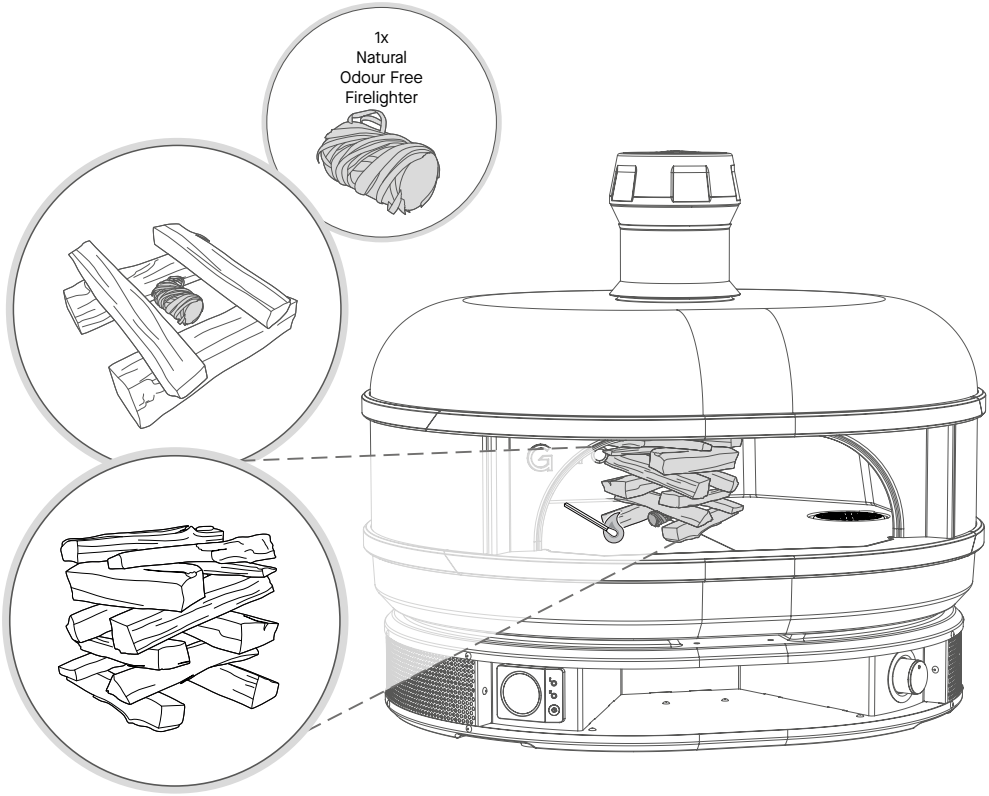

Moving The Fire

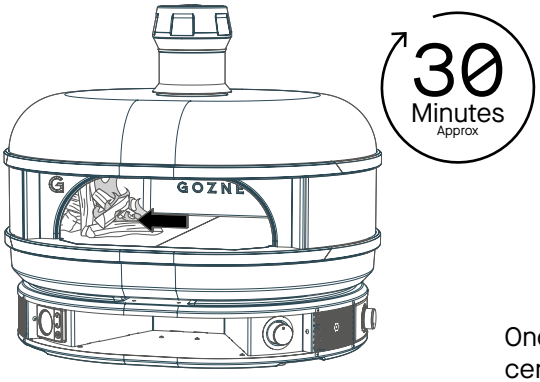

Once the fire has established itself in the center of the oven push it over to the left and continue to feed it for approximately 30 minutes or until the oven is fully saturated.

Then move the fire to the right of the oven (over the mesh puck). and continuously add wood to the fire to keep a rolling flame across the top of the oven.

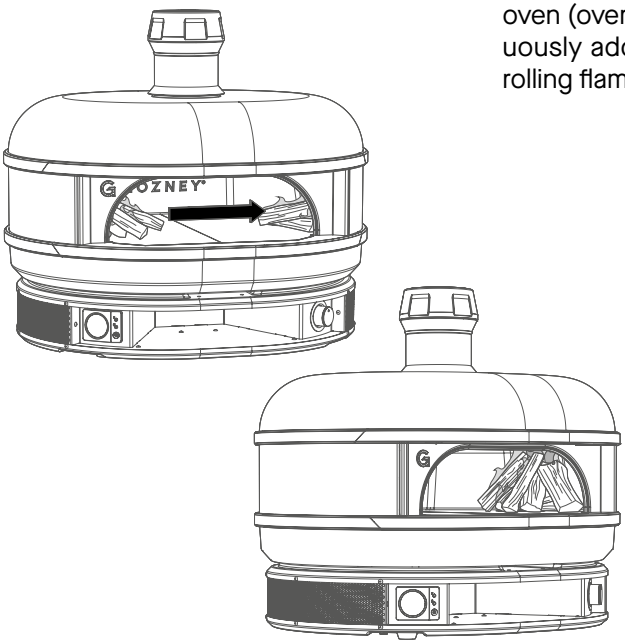

The flame from the wood fire should roll across the length of the oven's roof. Avoid overfeeding the fire, there should never be flames coming out the mouth of the oven. If you are struggling to get a good flame, ensure the wood you are using follows our guidelines at the beginning of this chapter.

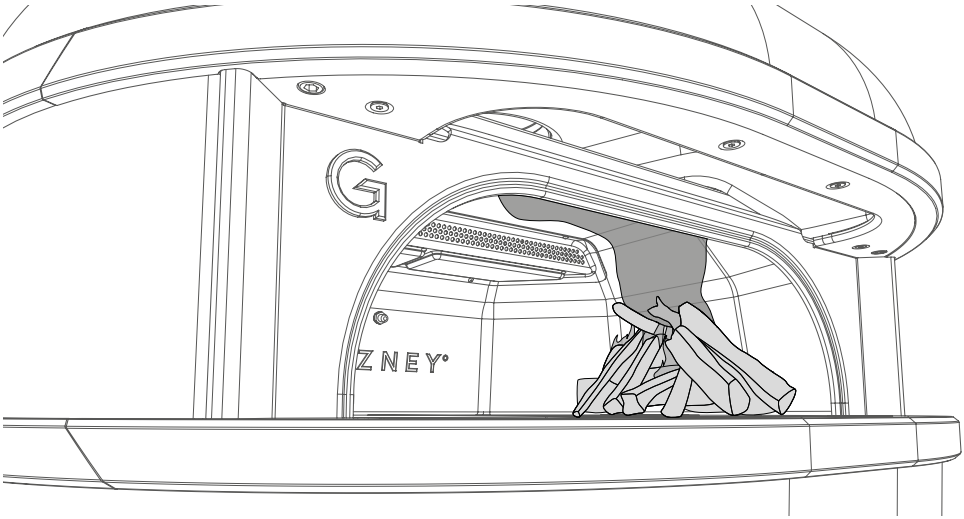

Ash Tray

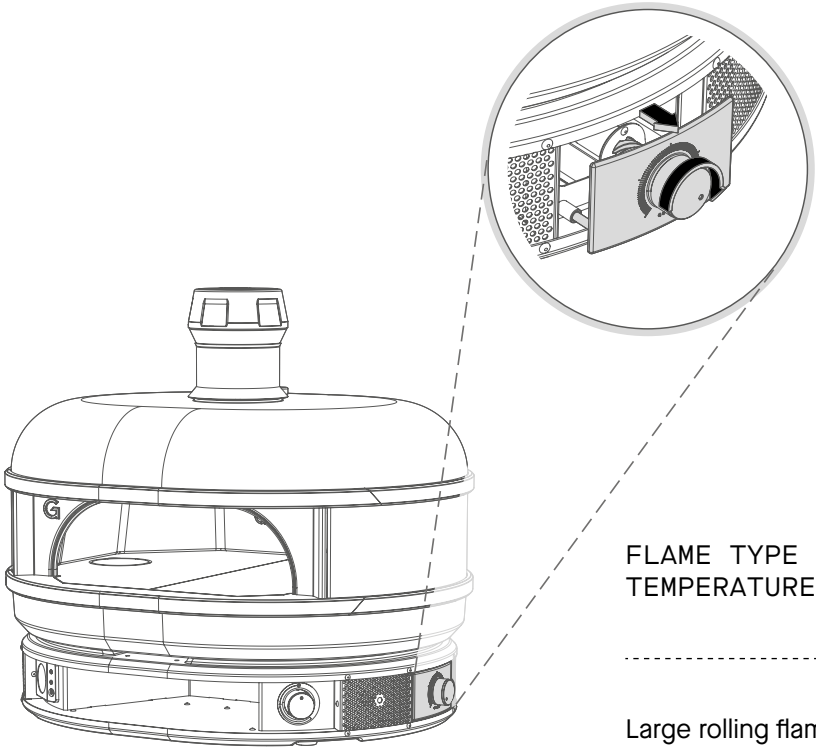

FLAME TYPE AND TEMPERATURE

Large rolling flames.
Temperatures of 750°F+

Small flames.
Temperatures of
400°F - 650°F

Embers, fires died down.
<400°F

After moving the fire over the mesh puck turn the control dial on the ash tray to the fully open position. This allows more oxygen to get to the fire and will help you achieve a good rolling flame across the top of the oven. Always wear oven gloves when adjusting the dial on the ash tray.

FINISHED COOKING

Allow the fire to die down until there are no naked flames and only embers remain. The door can then be placed in the closed position to retain heat.

COOKING WITH WOOD TIPS

For the best results and ease of cooking, be sure to use kiln dried wood with a moisture content of 20% or less.

Standard logs (including kiln dried) should not be stored in a commercial kitchen. Only solid fuels that have been HACCP certified (Hazard Analysis and Critical Control Point) are permitted to be stored in commercial kitchen locations. Please contact Gozney Ovens for more information on HACCP certified fuels.

RECIPE EXAMPLES	WOOD SIZE AND TYPE	USING THE DOOR
Fast cook times such as Neapolitan pizza.	Lots of small piece of kiln dried hard wood kindling. (1-2 inches)	DO NOT USE THE DOOR.
Finishing meats, charring vegetables or small items in a cast iron dishes such as lasagna.	Large pieces of kiln dried hard wood. (2-4 inches)	OK to use door when ajar do not close or leave unattended.
Slow roasting meats or vegetables. Baking breads.	Fire left to die down after the oven has been saturated.	OK to use door in closed or ajar positions.

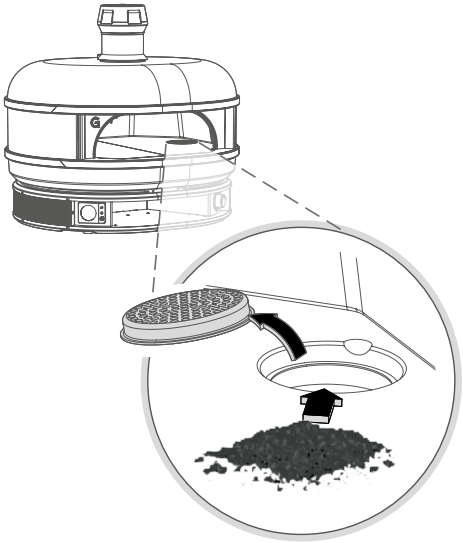

ASH DISPOSAL

Ensure you wait until the oven is cool before attempting to remove the ash. Don't dispose of ash near or into anything flammable.

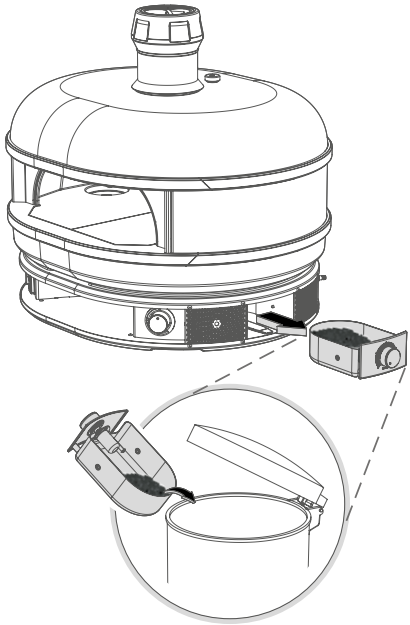

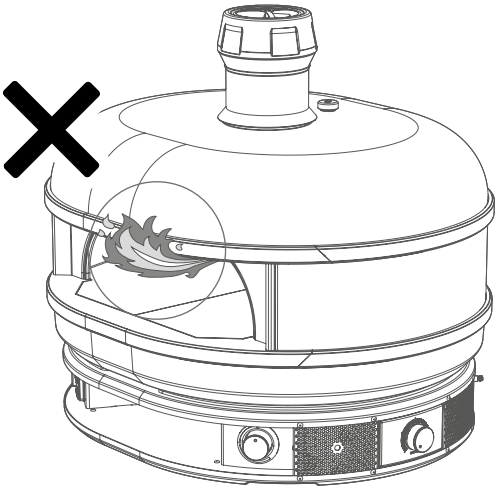

FUEL OVERLOADING

Overloading is dangerous and can cause excess smoke and flame. There should never be flames coming out the mouth of the oven, if this happens step away from the oven and wait for the fire to die down.

REFUELING ONTO A LOW FIRE BED

If there is insufficient burning material in the fire bed to light a new fuel charge, excessive smoke emission can occur. Refueling must be carried out onto a sufficient quantity of glowing embers and ash that the new fuel charge will ignite in a reasonable period. If there are too few embers in the fire bed, add suitable kindling to prevent excessive smoke.

CLEANING THE OVEN

The oven floor should reach temperatures of 650°F to start “self-cleaning”. To do this raise the temperature of the oven to above 650°F for a period of three hours.

ASH DISPOSAL

After 24 hours ashes can still be hot. When removing ash from your oven, a non-combustible tool must be used at all times.

- Ash should be placed in a metal container, with tight fitting lid and removed using a non-combustible ash shovel.
- The closed container of ashes should be placed in a safe place until thoroughly cooled.

Your guide to general maintenance.

5

General Maintenance

Cleaning The Oven

INTERNAL

The best way to clean the inside of Dome is to burn off any food debris or soot that is left behind. When the oven is over 650°F it will start self cleaning and any burnt on food will burn off after a period of three hours.

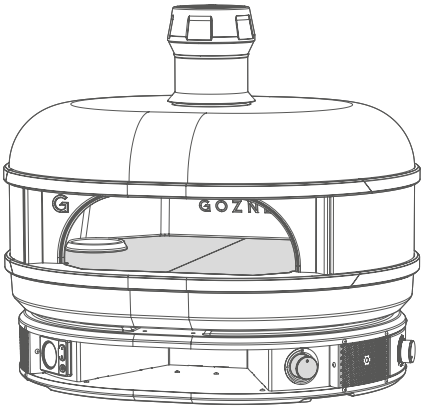

If there is any soot or debris left, wait for the oven to cool down and use a soft brush to dislodge, being careful not to apply too much pressure and damage the oven. Use a vacuum cleaner with a plastic attachment to remove the loose debris from the oven.

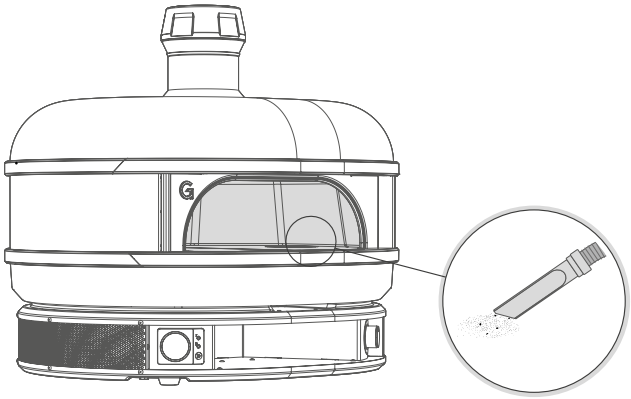

EXTERNAL

For the exterior of the oven use a non caustic bleach free cleaning spray on the dirty areas. Clean the area with warm soapy water and a sponge or non abrasive dish cloth and then wipe clean with paper towels.

Avoid spraying directly onto the thermometer, control dial or meshed areas on the base of the oven.

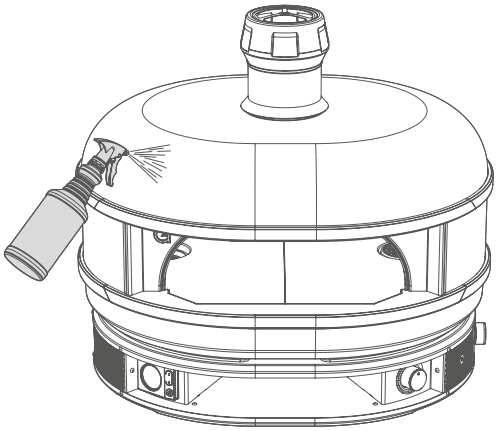

When the oven isn't in use it should be kept under cover away from rain. If you are placing a cover directly on Dome, ensure it's completely cooled down before covering.

When using the oven after a long spell of no use, we recommend firing the oven as if it is a first firing.

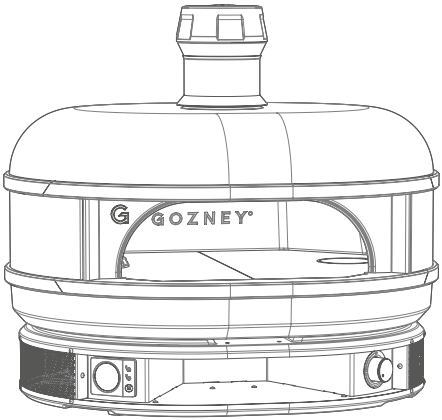

Replacing The Probe

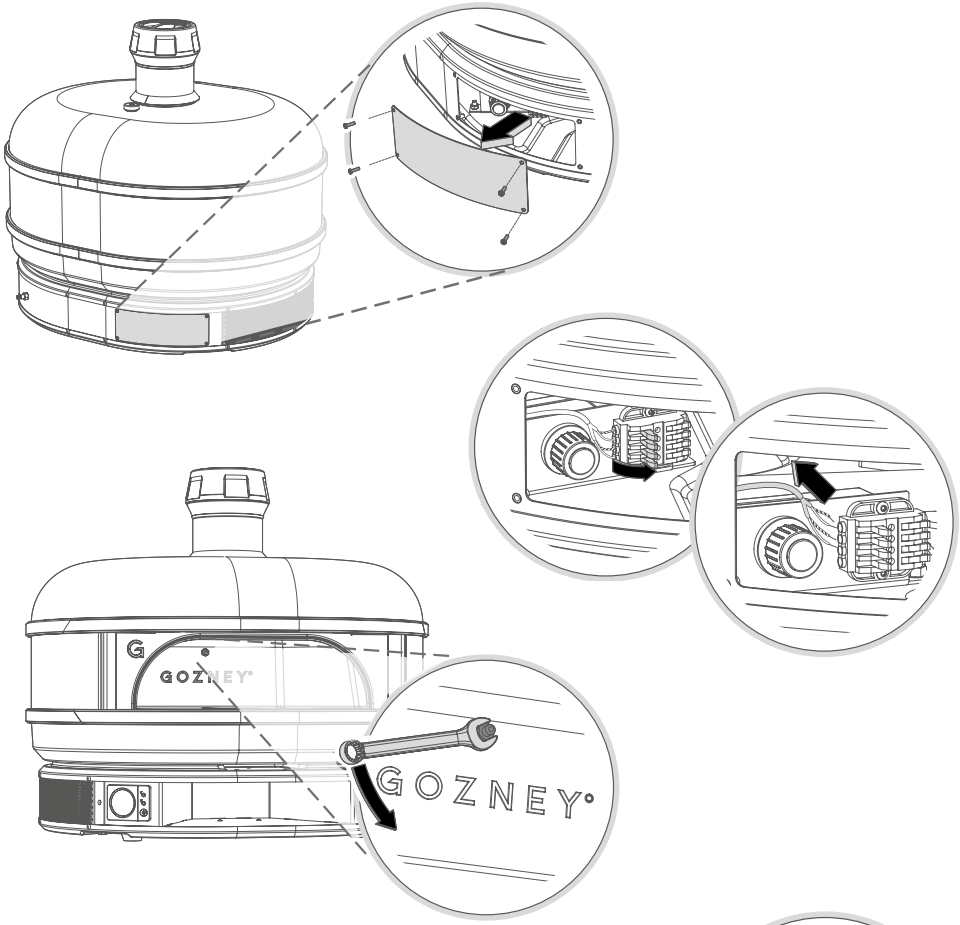

Only when the oven is cold, remove the rear panel to access the probe terminal. The terminal is held with a magnet so can be removed from the dock easily to gain better access. Lift all the levers on the left hand side of the terminal to release the probe wires. Unscrew the probe from inside the oven and pull the old probe out the mouth of the oven.

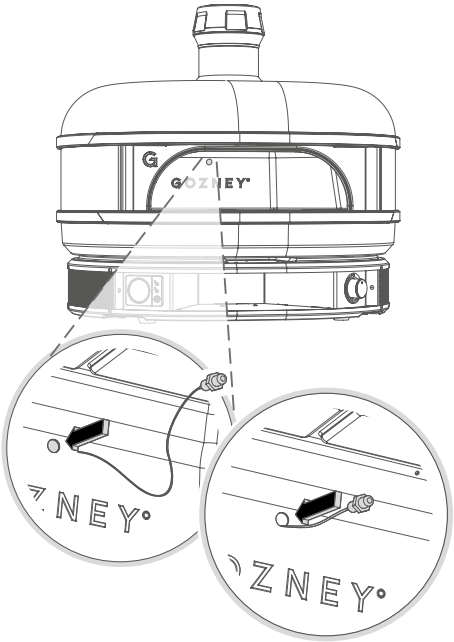

Push the new probe's wires into the hole and feed them through until they are visible from inside the rear panel. Hand tighten the probe in place, avoid using a spanner as you may damage the probe.

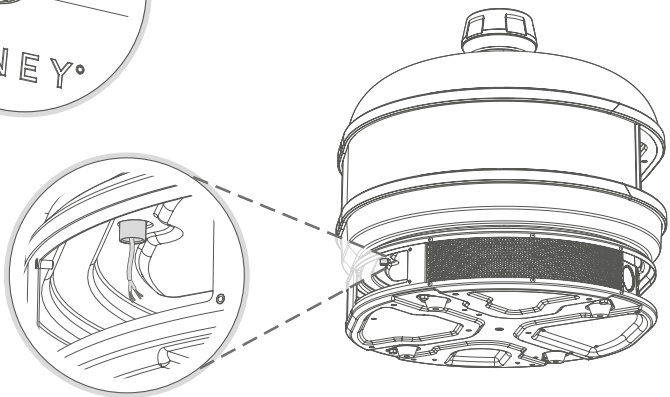

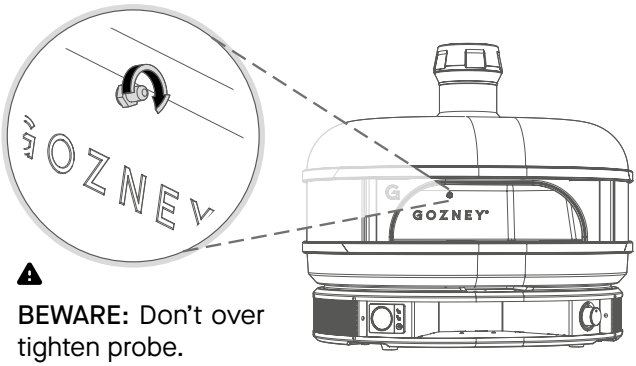

BEWARE: Don’t over tighten probe.

To wire the new probe, lift all the levers on the left hand side up and insert the wire into the holes on the side of the junction. The pattern/color of the wire should match the corresponding wire on the opposite side of the junction.

When the wire is fully inserted, push the lever back to its original position to clamp the wire in place. Ensure the wire is fully clamped in place before moving onto the next wire. Then reinsert the terminal into the dock and ensure the magnet engages with the metal plate.

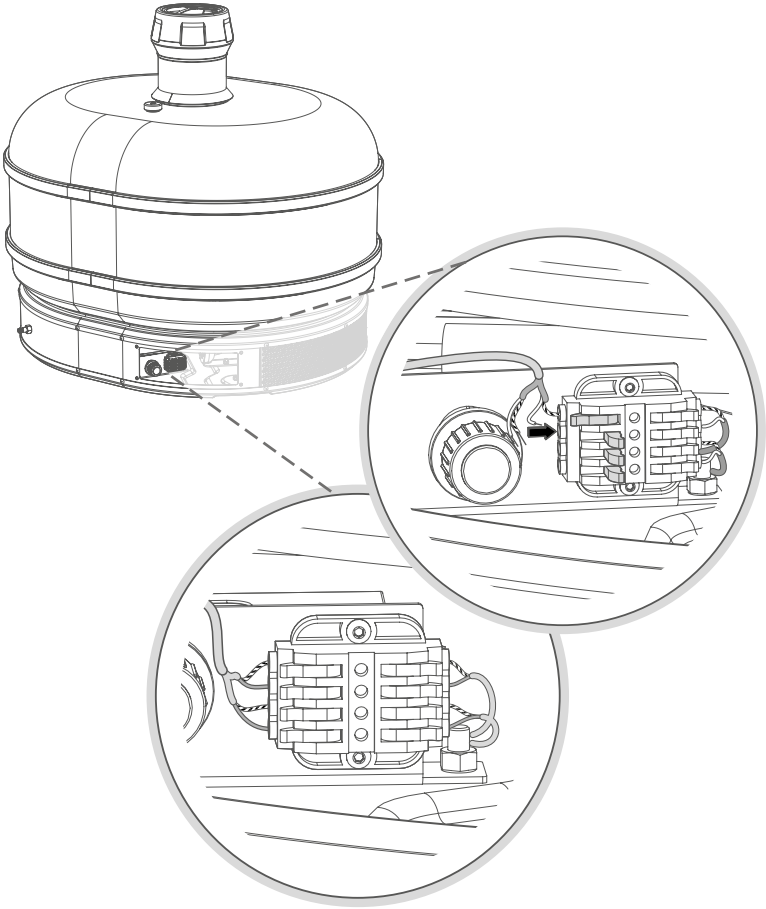

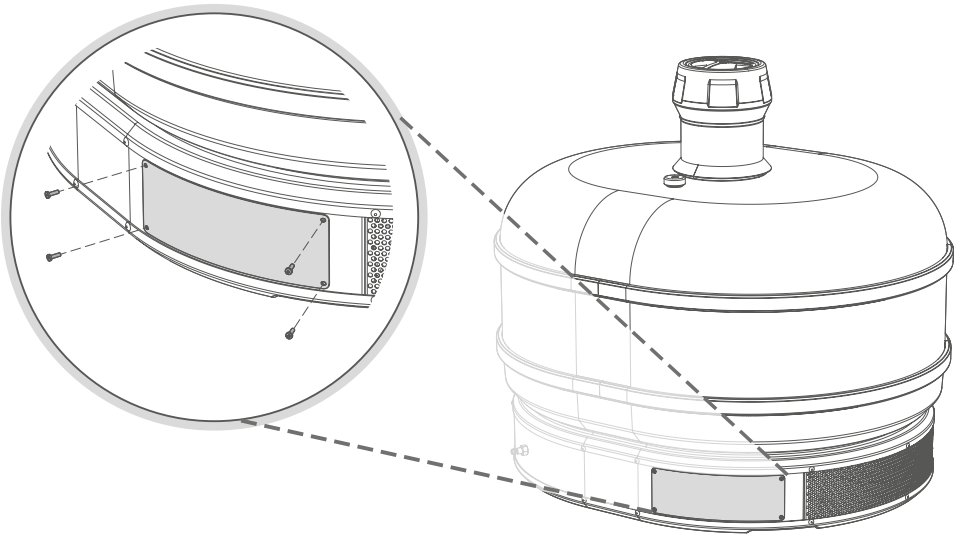

Double check the probe is functioning by checking the digital temperature display and return the panel to the back of the oven.

GOZNEY°