ZEPHYR

Models: DLI-E30ASX, DLI-E36ASX

Downdraft Hood

For use with these blowers
(purchase blowers separately):
Model DBI-600A - Internal
Models CBE-1000 - External
Models PBN-1000A - In-Line

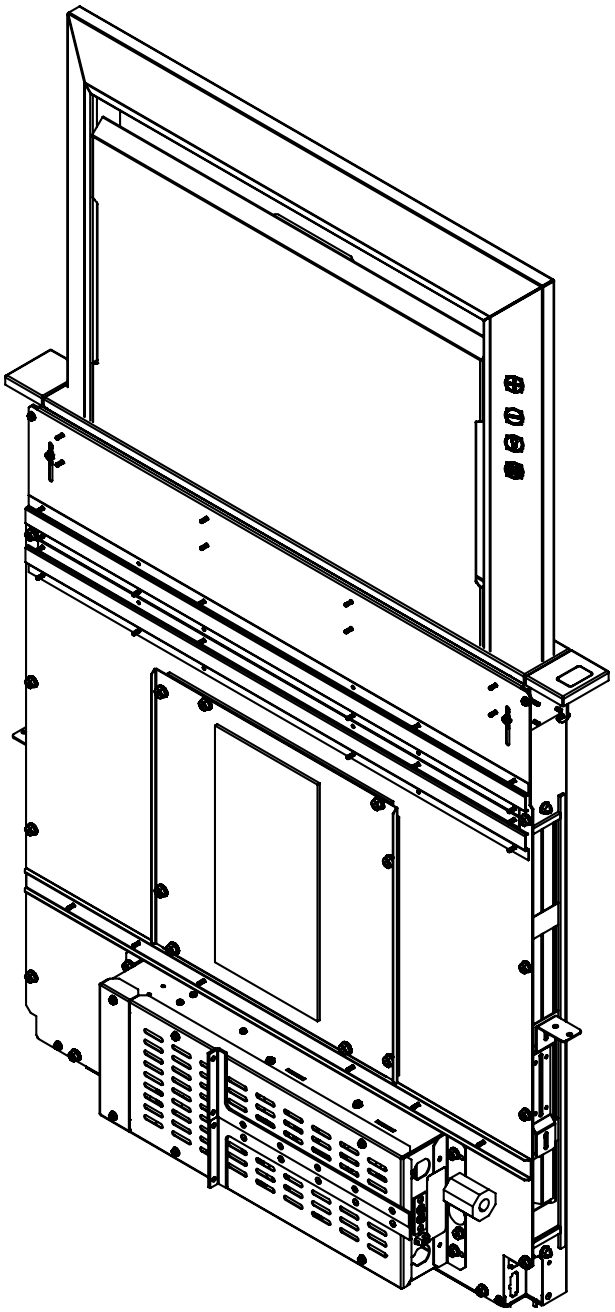

APR19.0101

Français p. 35

Español p. 69

READ AND SAVE THESE INSTRUCTIONS

Register your product online at: www.zephyronline.com

Table of Contents

Safety Information 3
Contents 4
Specifications 4
Tools Needed 4

Planning
- Before You Begin 5
- Taking Measurements 5
- Ducting Configurations 5
- Cabinet Cutouts 10

Preparing the Downdraft
- Side or Rear Ducting 12
- Front Ducting 12
- Electrical Panel in Remote Location 13
- Final Assembly 13

Installation
- Cutting Countertop Opening 14
- Install Housing into Cabinet 15
- Install Finishing Trim 16
- Installing Ductwork 16

Electrical Wiring Installation
- Internal Blower Only 17
- Exterior or In-Line Blower Only 18

Appliance Installation/Operation 19
Use and Care 20
Optional Accessories 21
Blower Duct Routing Configurations A - H 23
Wiring Diagram 31
Dimensional Drawing 32
Warranty 33

WARNING

TO REDUCE THE RISK OF FIRE, ELECTRIC SHOCK, OR INJURY TO PERSONS, OBSERVE THE FOLLOWING:

1. Use this unit only in the manner intended by the manufacturer. If you have questions, contact the manufacturer at the address or telephone number on the back page.
2. Before servicing or cleaning unit, switch power off at service panel and lock the service disconnecting means to prevent power from being switched on accidentally. When the service disconnecting means cannot be locked, securely fasten a prominent warning device, such as a tag, to the service panel.
3. Installation work and electrical wiring must be done by a qualified person(s) in accordance with all applicable codes and standards, including fire-rated construction codes and standards.
4. Sufficient air is needed for proper combustion and exhausting of gases through the flue (chimney) of fuel burning equipment to prevent backdrafting. Follow the heating equipment manufacturer's guideline and safety standards such as those published by the National Fire Protection Association (NFPA), and the American Society for Heating, Refrigeration and Air Conditioning Engineers (ASHRAE), and the local code authorities.
5. When cutting or drilling into wall or ceiling, do not damage electrical wiring and other hidden utilities.
6. Ducted fans must always be vented to the outdoors.
7. To reduce the risk of fire, use only metal ductwork.
8. Do not install this product with the activating switch directly behind a burner or element. Minimum distance between the switch and the edge of the burner should be 4 inches.
9. Loose-fitting or hanging clothing should never be worn when operating this appliance. They may be ignited by burners/ elements on cooktop.
10. Children should not be left alone or unattended in the area where this appliance is in use.
11. This unit must be grounded.

TO REDUCE THE RISK OF A RANGE TOP GREASE FIRE:

a) Never leave surface units unattended at high settings. Boil overs cause smoking and greasy spillovers that may ignite. Heat oils slowly on low or medium settings.
b) Always turn hood ON when cooking at high heat or when cooking flaming foods.
c) Clean ventilating fans frequently. Grease should not be allowed to accumulate on fan or filter.
d) Use proper pan size. Always use cookware appropriate for the size of the surface element.

WARNING

TO REDUCE THE RISK OF INJURY TO PERSONS IN THE EVENT OF A RANGE TOP GREASE FIRE, OBSERVE THE FOLLOWING:

1. SMOTHER FLAMES with a close-fitting lid, cookie sheet, or metal tray, then turn off the burner. BE CAREFUL TO PREVENT BURNS. If the flames do not go out immediately, EVACUATE AND CALL THE FIRE DEPARTMENT.
2. NEVER PICK UP A FLAMING PAN - You may be burned.
3. DO NOT USE WATER, including wet dishcloths or towels - a violent steam explosion will result.
4. Use an extinguisher ONLY if:
   A. You know you have a Class ABC extinguisher, and you already know how to operate it.
   B. The fire is small and contained in the area where it started.
   C. The fire department is being called.
   D. You can fight the fire with your back to an exit. Based on "Kitchen Fire Safety Tips" published by NFPA.

CAUTION

1. For indoor use only.
2. For general ventilating use only. Do not use to exhaust hazardous or explosive materials and vapors.
3. To avoid motor bearing damage and noisy and/or unbalanced impellers, keep drywall spray, construction dust, etc. off power unit.
4. Clean filters and grease-laden surfaces frequently.
5. Do not repair or replace any part of this appliance unless specifically recommended in this manual. All other servicing should be done by a qualified technician.
6. Please read specification label on product for further information and requirements.
7. To reduce the risk of fire and electric shock, install this downdraft only with blower models shown below. Other blower models cannot be substituted. (Blowers sold separately). Internal Blower Model DBI-600A, Exterior Blower Model CBE-1000, In-Line Blower Model PBN-1000A.

INSTALLER: Save this manual for Electrical Inspector and Homeowner to use.

Contents

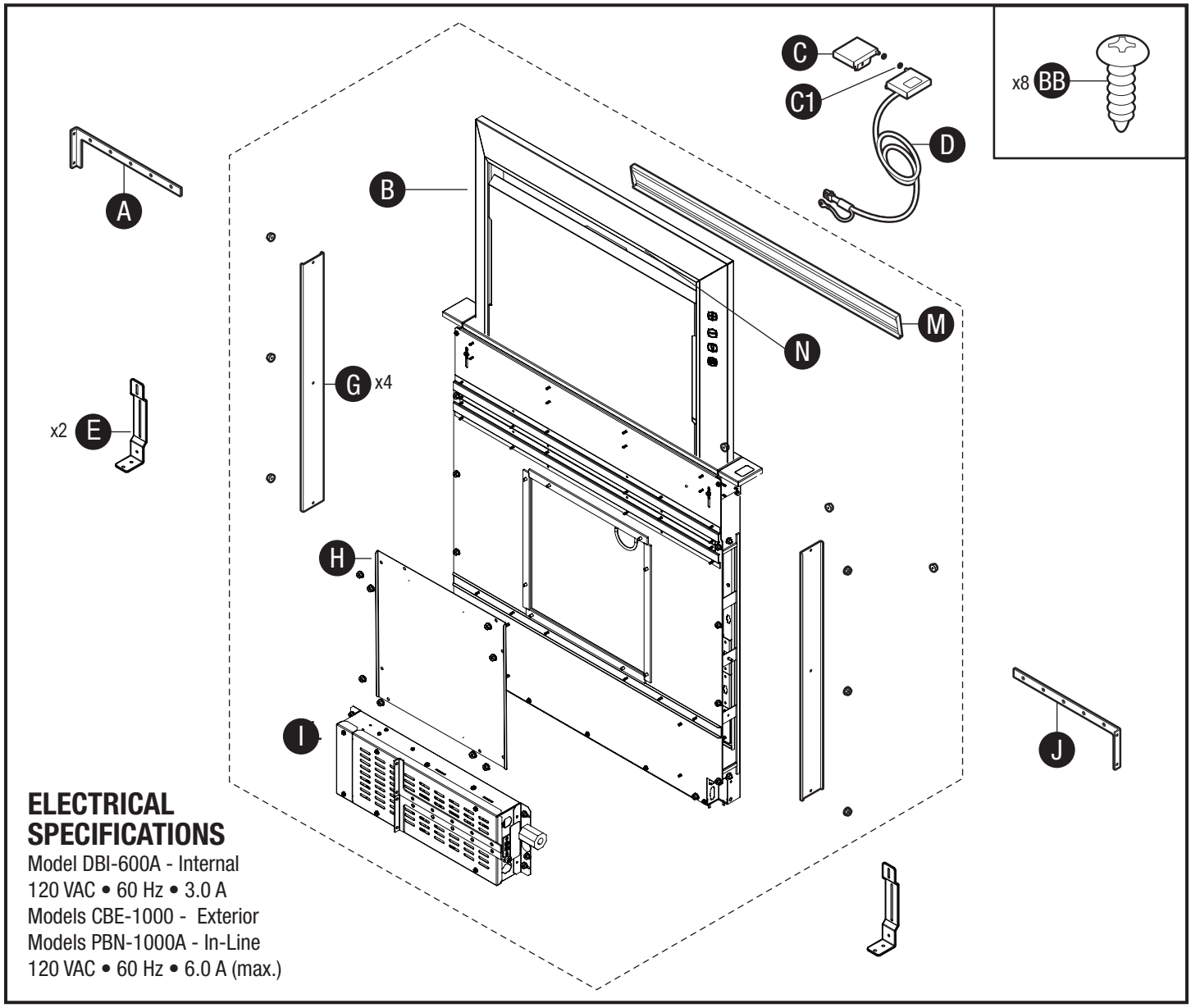

ELECTRICAL SPECIFICATIONS
Model DBI-600A - Internal
120 VAC • 60 Hz • 3.0 A
Models CBE-1000 - Exterior
Models PBN-1000A - In-Line
120 VAC • 60 Hz • 6.0 A (max.)

Part	Description	Quantity
A	Upper support bracket (left)	1
B	Downdraft ventilator housing	1
C	End cap trim (left)	1
C1	End cap trim retaining washer	2
D	End cap trim–up button (right)	1
E	Support Leg	2
G	Discharge cover	4
H	Front panel cover	1
I	Electrical panel	1
J	Upper support bracket (right)	1

Part	Description	Quantity
M	Flip door	1
N	LED light strip	1
BB	#10 x .50 Phillips round head screw	8

Tools Needed

Measuring tape, pencil, Phillips screwdriver #2, nut drivers (11/32", 3/8", 7/16"), box-end wrench, saw, spirit-level, tin snips, work gloves, and aluminum tape. (DO NOT use insulating tape.)

Before You Begin

Due to its flexible design, this downdraft system can be used to exhaust airborne contaminants when cooking with a variety of gas or electric cooking appliances - **including cooktops, rangetops, slide-in ranges and free-standing ranges.**

It can be mounted in island, peninsula, or conventional wall locations. The blower (purchase separately) and electrical panel can be mounted to the downdraft unit, inside the cabinet, or in a convenient remote location.

This unit can be easily installed following these basic steps:
- Cut out the countertop opening.
- Mount the unit in the cabinet.
- Install the blower and electrical panel.
- Connect the ductwork and electrical.
- Install the trim.
- Install the cooking appliance.

Note: the high level of air flow of this appliance may affect the gas flame on some types of gas cooktops. This is NORMAL and will cause no harm, but can be corrected by lowering the speed of the blower.

Gas Cooktop Seal Kit is recommended for use with all gas cooktops. The kit creates a seal between the cooktop and the lower cabinet. Includes trim bracket and trim seal. See Optional Accessories section.

Taking Measurements

- Refer to the cooktop installation instructions for dimensions of cooktop, countertop cut-out, and cabinet requirements. However, it is recommended that oversized cabinets be used for easier installation. Custom island designs need to account for deeper cabinets - especially when installed with a range in front of the downdraft or when mounting the blower behind the downdraft. You must also plan for an access door.
- Cooktop depth can vary greatly from one to another. This may cause the fit of these two appliances to be rather tight. Pay special attention to the areas of potential interference highlighted above. A countertop with (A) a raised lip and/or (B) a backsplash may not allow enough flat countertop for a proper installation. Note that 2-3/4" of flat countertop is required behind cooktop and that 2-1/2" is necessary between the back edge of the cooktop and the inside of cabinet back.

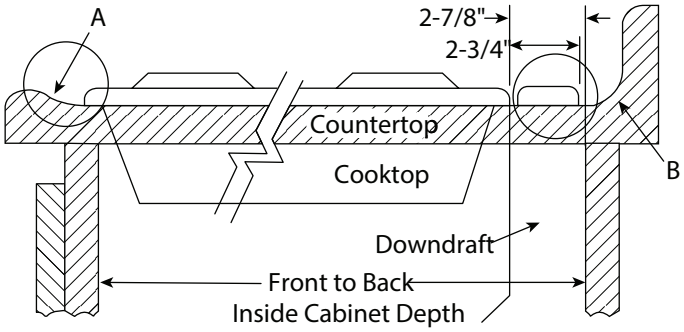

Ducting Configurations

- The downdraft blower system is designed for use with 8" round ductwork using a DBI-600A blower or 10" round ductwork using a remote blower. (Purchase blowers separately.)

- For best performance: Choose the ducting option which allows the shortest length of ductwork and a minimum number of elbows and transitions. Check location of floor joists, wall studs, electrical wiring or plumbing for possible interference.

Front Exhaust with Internal Blower

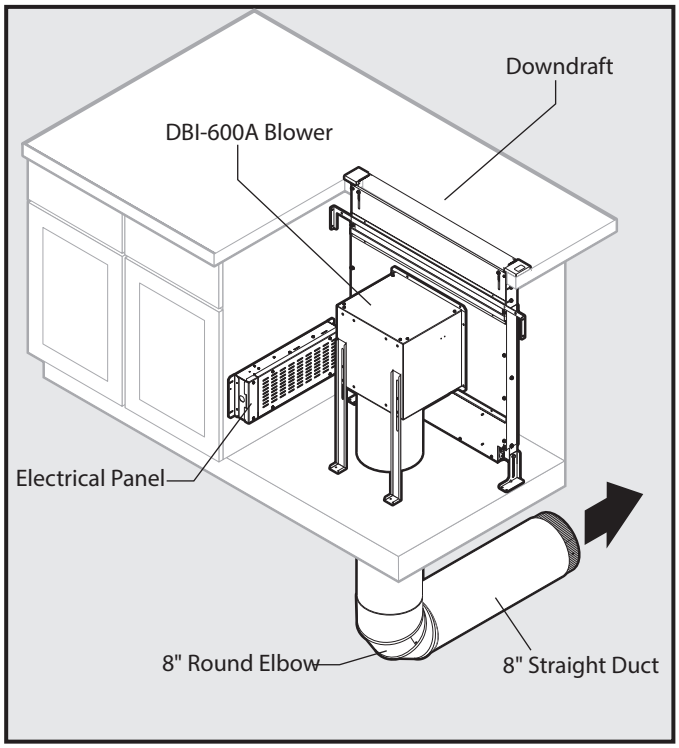

Ducting Configurations (continued)

Front Exhaust with DBI-600A Blower (through cabinet)

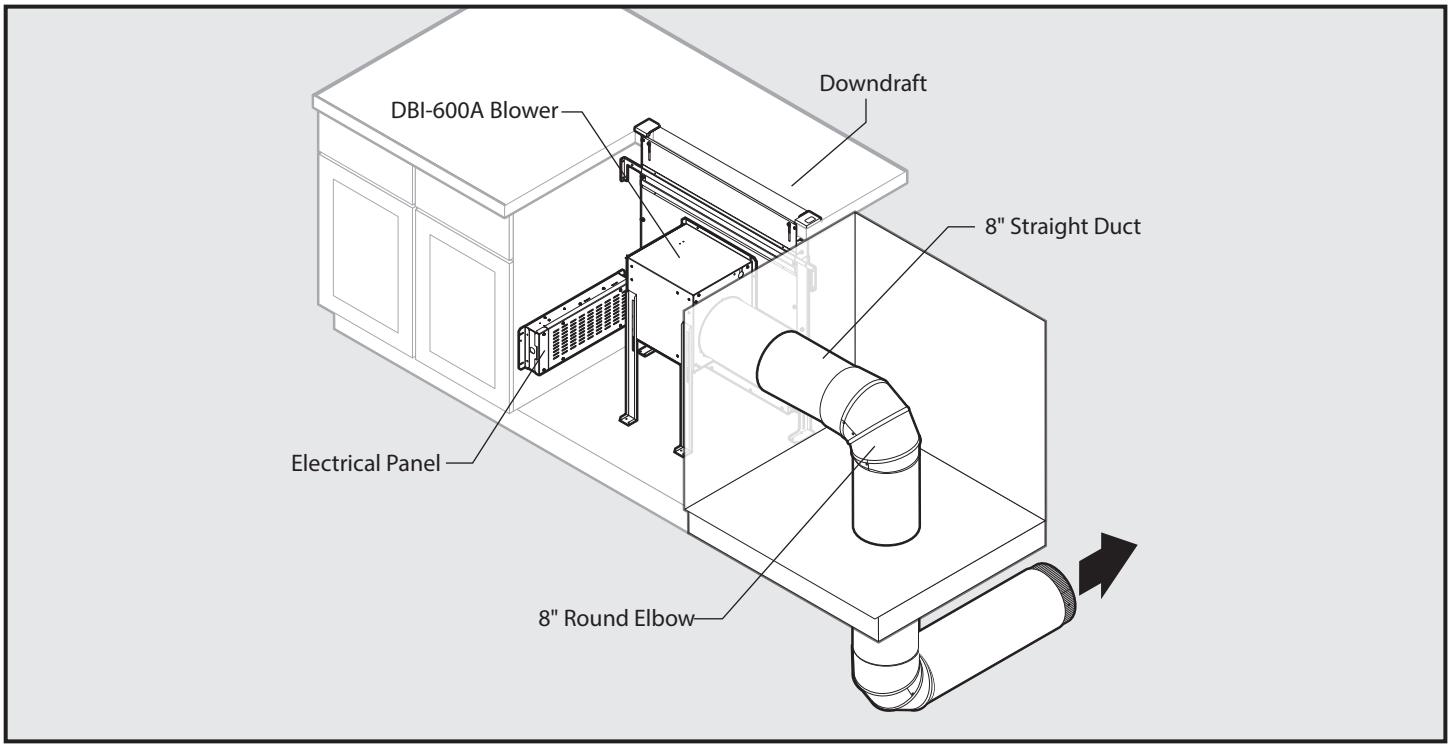

Front Exhaust with DBI-600A Blower and Recirculating Kit

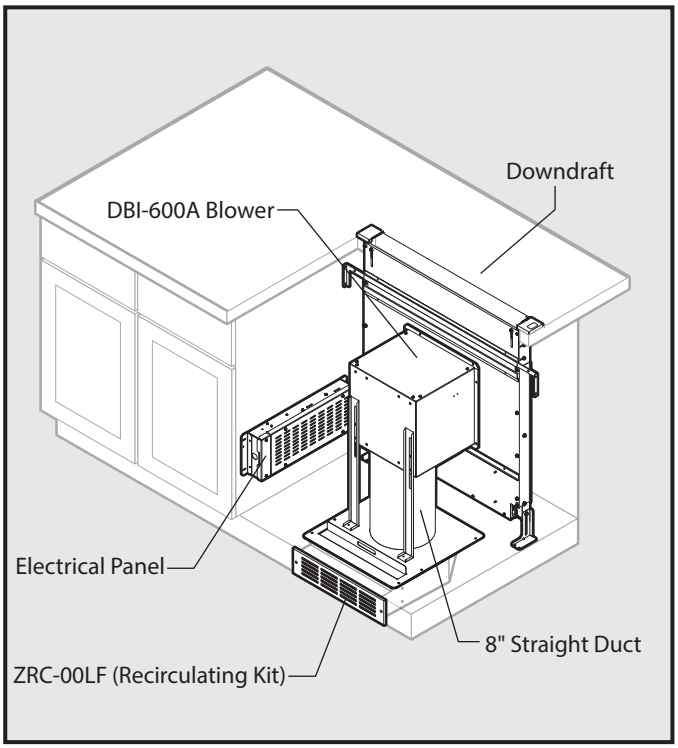

Front Exhaust with DBI-600A Blower (through cabinet) and Recirculating Kit

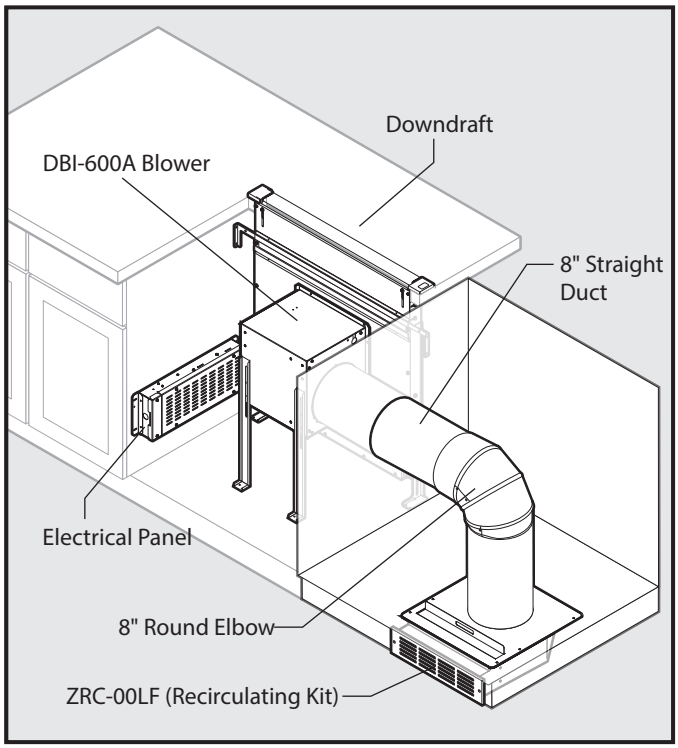

Refer to ZRC-00LF manual for further recirculating kit installation instructions .

Ducting Configurations (continued)

Side Exhaust with DBI-600A Blower

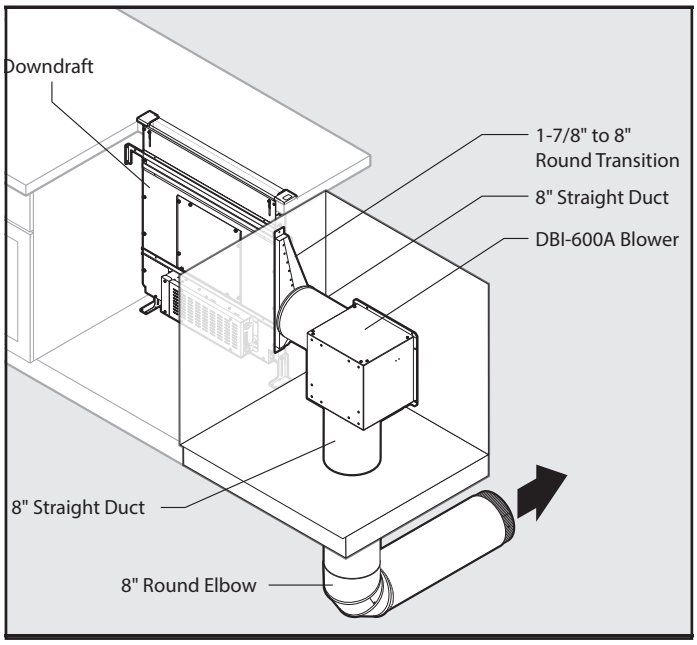

Rear Exhaust with DBI-600A Blower

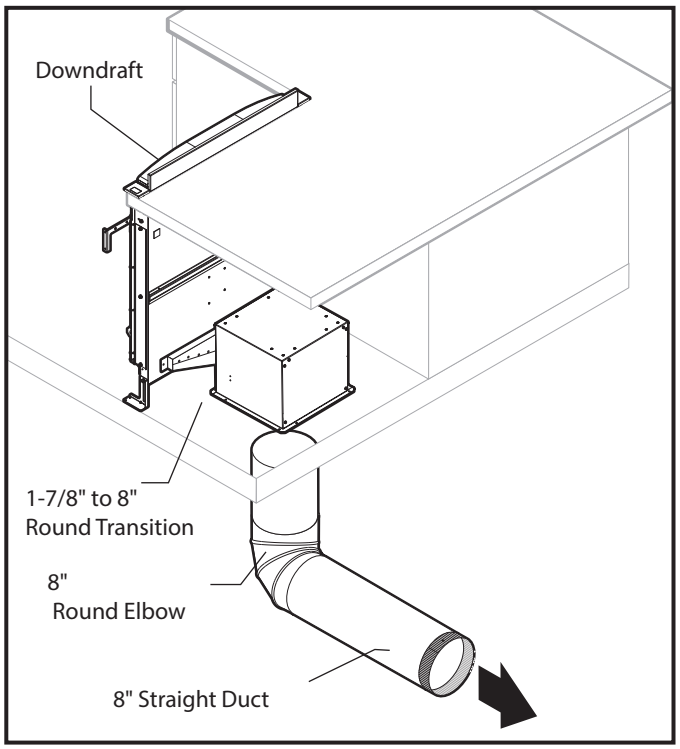

Side Exhaust with DBI-600A Blower and Recirculating Kit

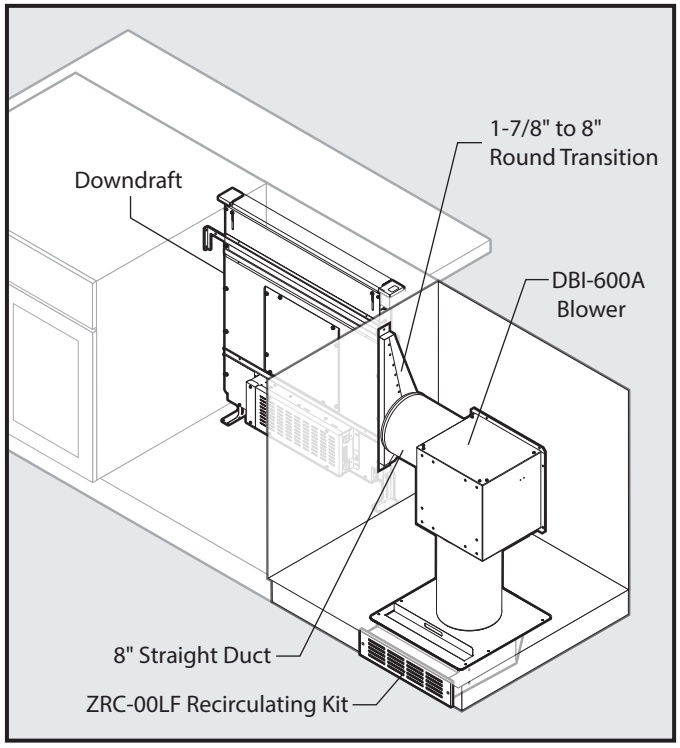

Refer to ZRC-00LF manaul for further recirculating kit installation instructions .

Ducting Configurations (continued)

Front Exhaust with Remote Blower

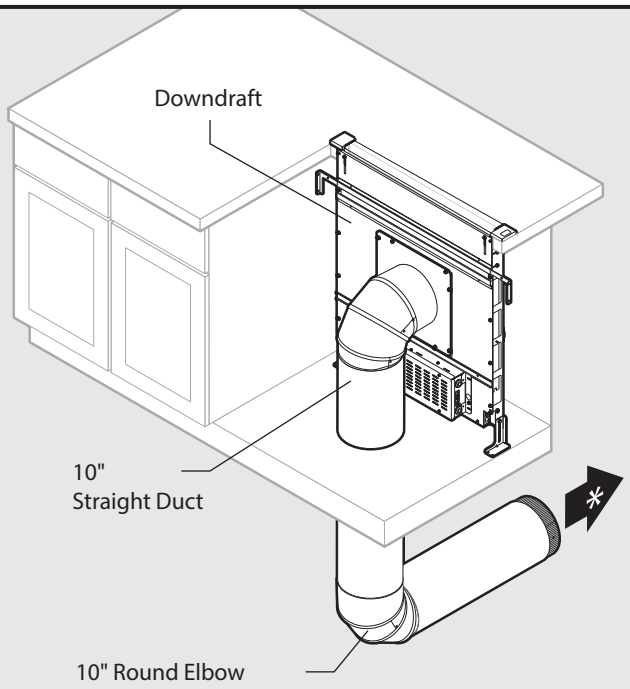

* To one of the following:
  - Model CBE-1000 External Blower
  - Model PBN-1000A In-line Blower

Note: External or in-line blowers require 10" ducting.

Side Exhaust with Remote Blower

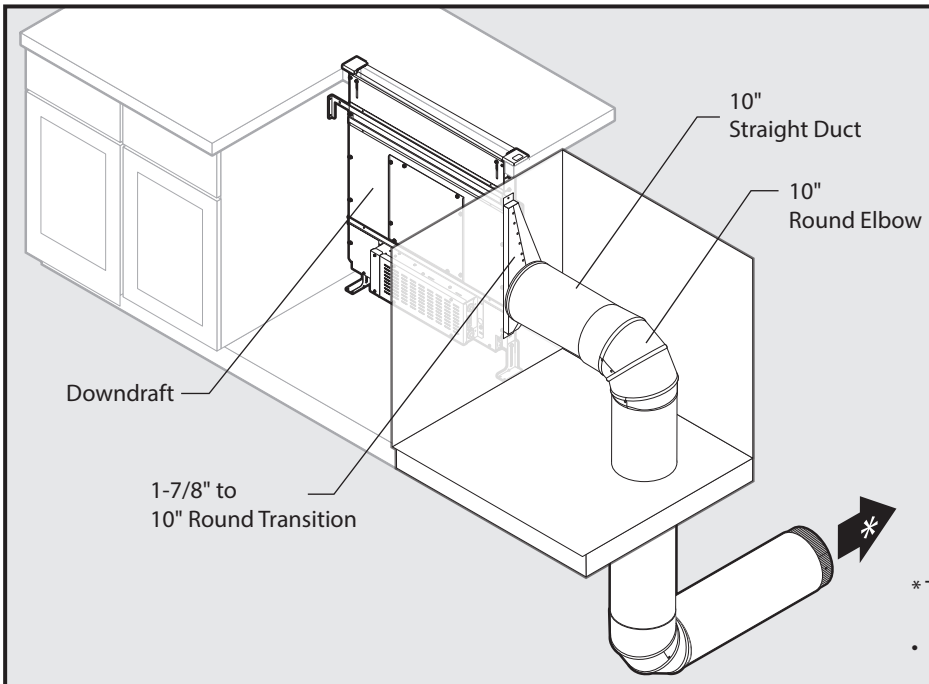

* To one of the following:
  - Model CBE-1000 External Blower
  - Model PBN-1000A In-line Blower

Note: External or in-line blowers require 10" ducting.

Ducting Configurations (continued)

Rear Exhaust with Remote Blower

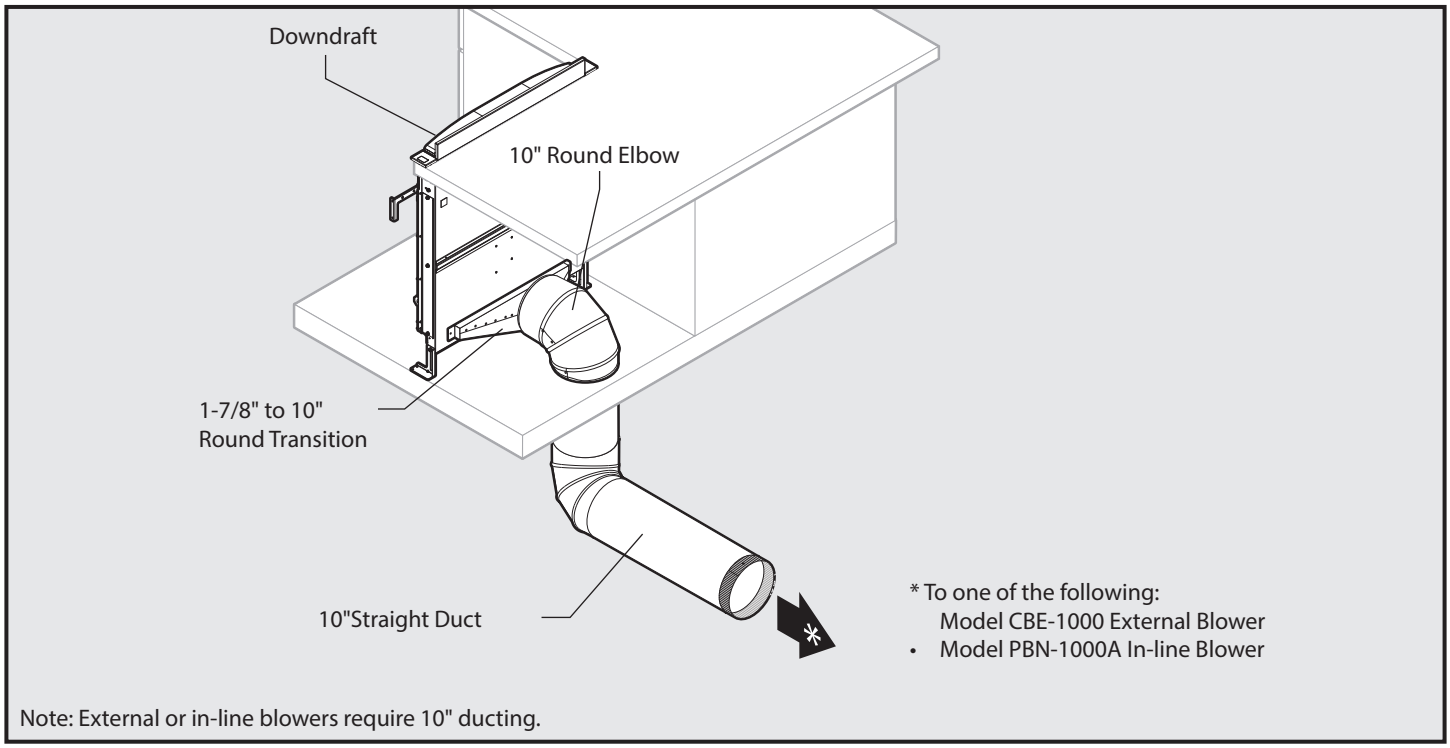

Below Exhaust with Remote Blower

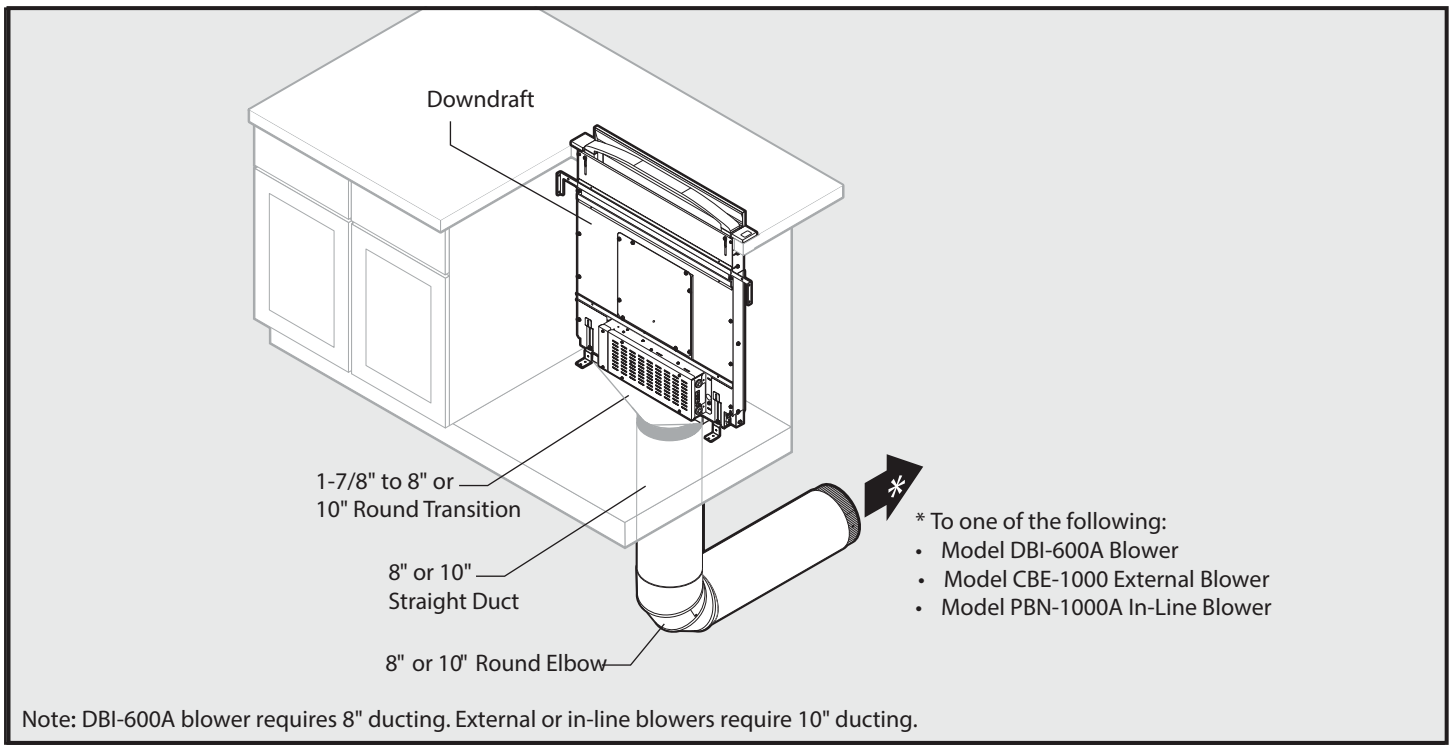

Cabinet Cutouts

CAUTION

BEFORE CUTTING HOLE IN CABINET FOR DUCTWORK, check for interference with floor joists, wall studs, electrical wiring, or plumbing.

Use the dimensions in illustrations to help plan how and where to provide duct access through your cabinet. Generally, 1-7/8" x 19" rectangular duct will be used through left, right, below and back of cabinet - while 8" round duct will be used through cabinet floor using DBI-600A blower.

For left, right, below or rear exhaust: Allow at least 18" for transition and elbow or blower.

For left / right exhaust: a 30" deep cabinet is recommended to align properly with DBI-600A blower. DBI-600A blower can be mounted to rear cabinet wall or to a platform / frame (not provided) on the base of the cabinet floor. (See DBI-600A blower instructions).

Note: DBI-600A blower can only attach to the front of the downdraft.

Cabinet depths of 24" to 30" are required - depending on the type of cooking appliance.

If using a Recirculating Kit, see "Plan the installation" section of the installation instructions packaged with the kit.

Below, Side or Rear Ducting Cutouts

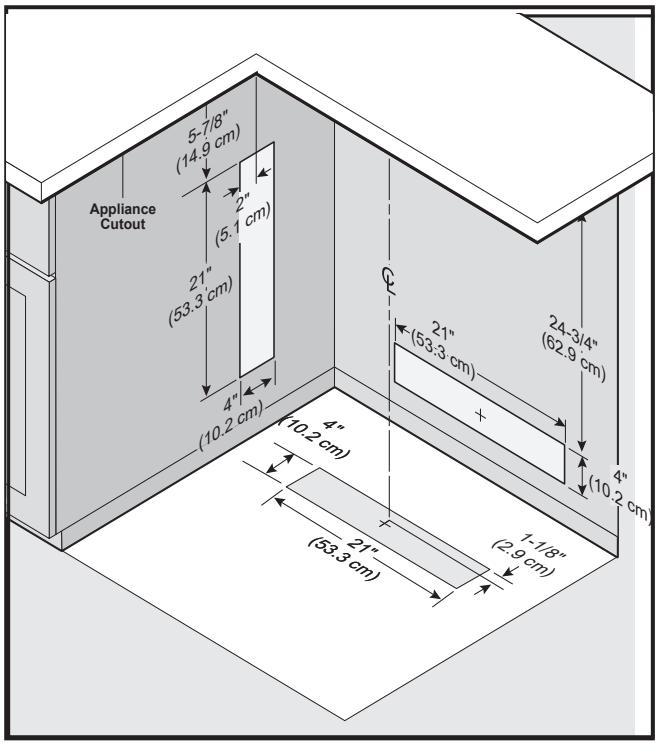

Cabinet Cutouts (continued)

10" External or In-line Blower Ducting Cutout

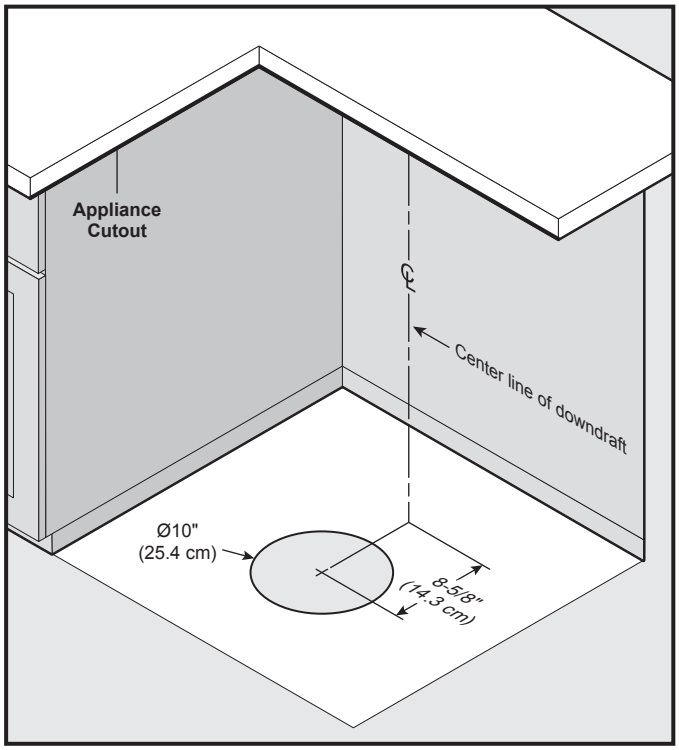

Dimensions based off of - 10" round elbow

DBI-600A Blower Ducting - Remote Location Cutout

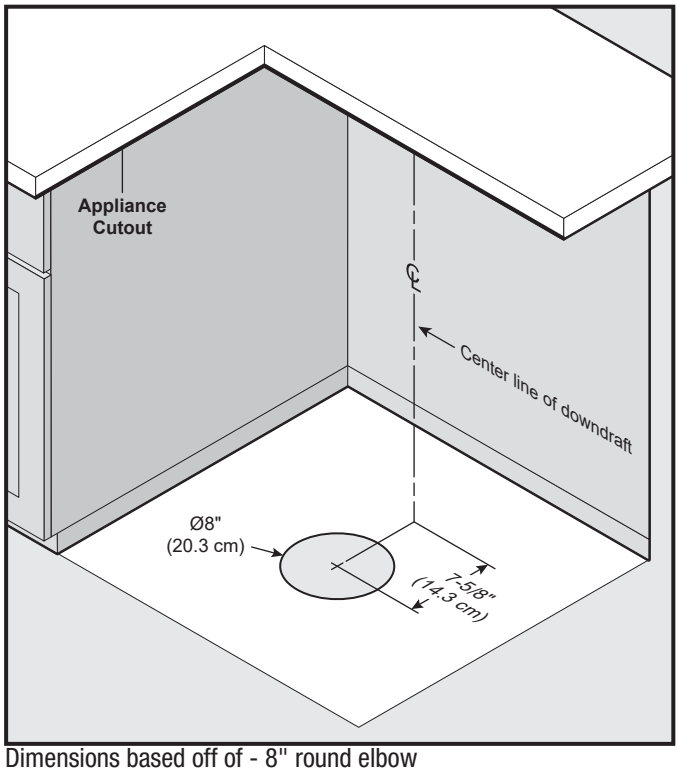

Dimensions based off of - 8" round elbow

DBI-600A Blower Ducting Cutout

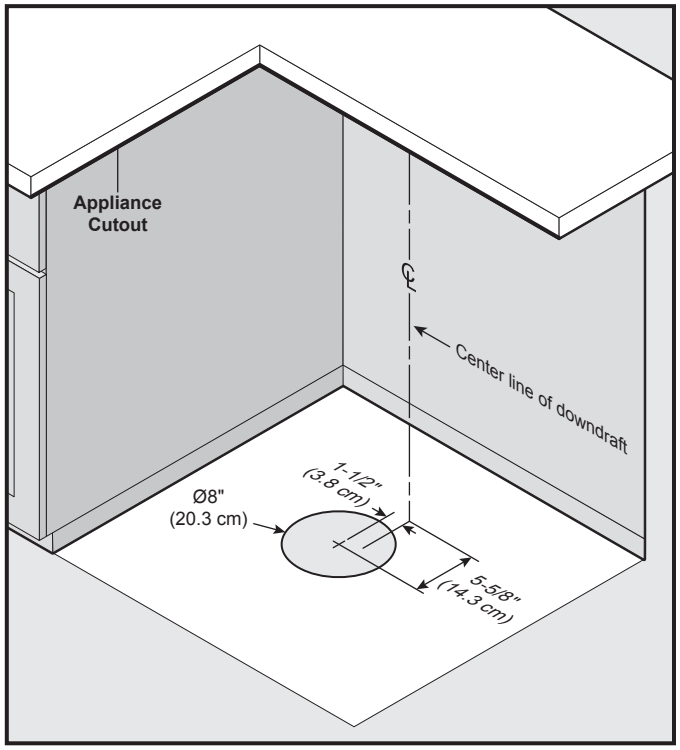

Side or Rear Ducting

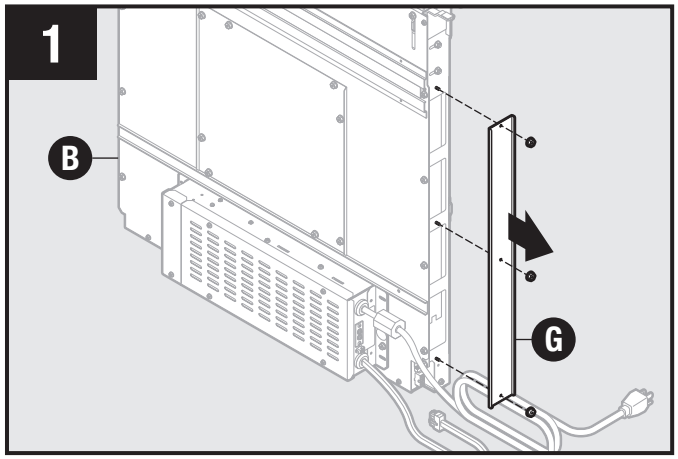

Remove a discharge cover (G) from sides or rear of downdraft (B).
Note: Only remove one cover.

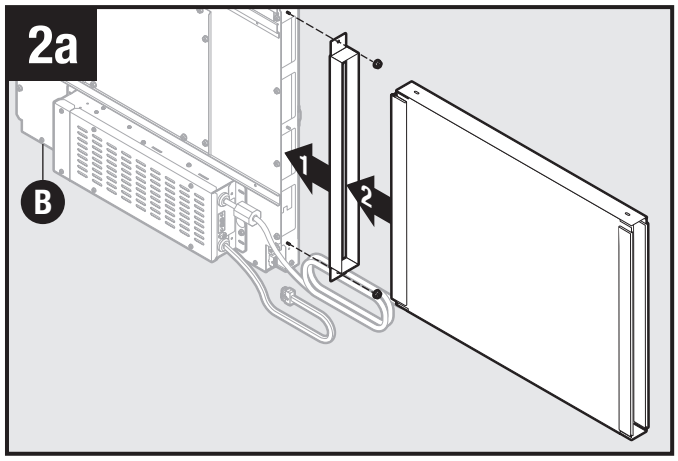

Install a transition and rectangular ductwork to downdraft (B).
(Rectangular ductwork sold separately)

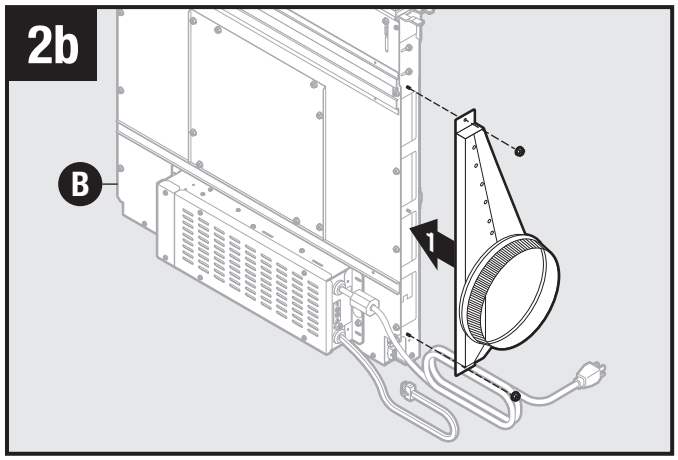

Install 1-7/8" to 8" or 10" round transition to downdraft (B).
(Rectangular to round transitions sold separately)

Front Ducting

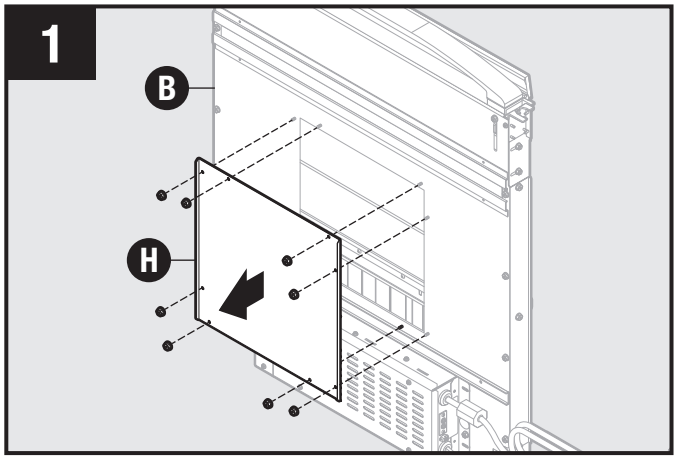

Remove front panel cover (H) from downdraft (B).

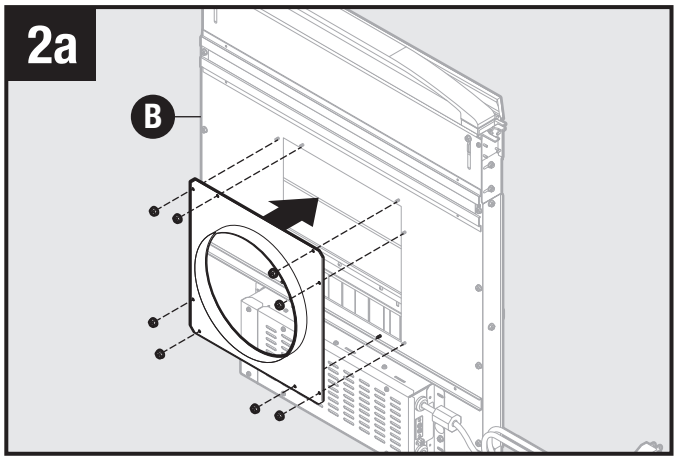

Install 8" or 10" remote discharge plate to downdraft (B).
(Remote discharge plate sold separately)

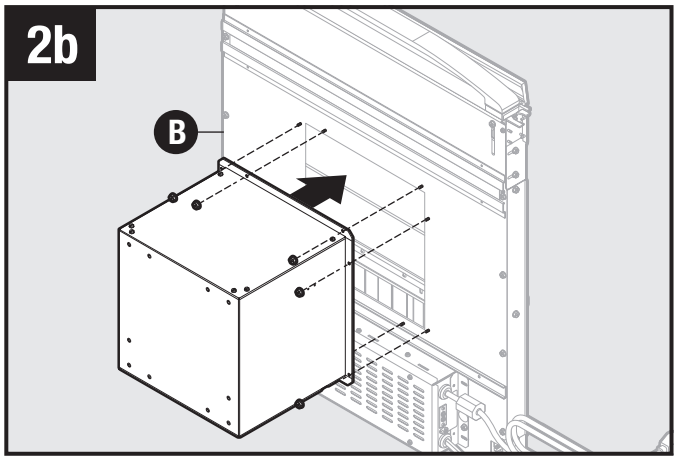

Install the DBI-600A blower to downdraft (B).
Note: DBI-600A blower can be installed with duct to left, right or downward.

Electrical Panel in Remote Location

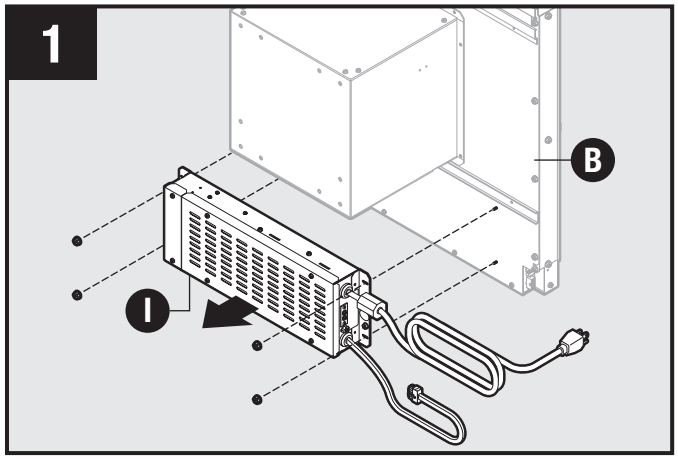

Remove electrical panel (I) from downdraft (B). Electrical panel connector cable legth is 2 feet. Optional 5 foot cable extension available.
Note: Option for most installations. Required for DBI-600A blower installations when discharge is down.

2

Install electrical panel in remote location.

Final Assembly

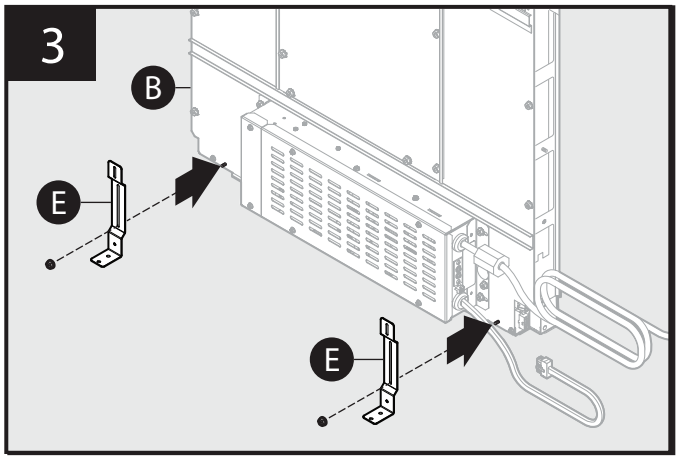

Attach previously removed lower support legs (E) to downdraft (B) using one nut for each leg.

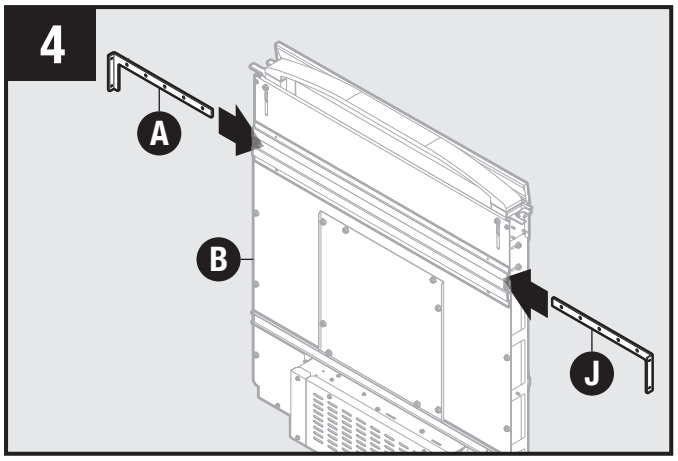

Slide upper support brackets (A,J) into side channels of downdraft (B).

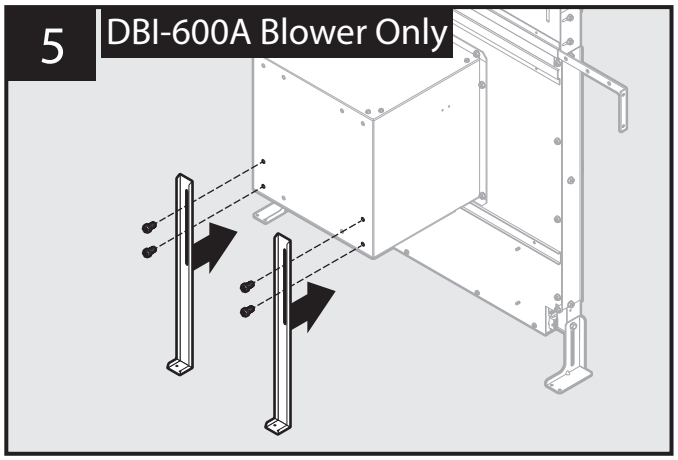

If using DBI-600A blower, attach blower support legs with supplied screws.

Cutting Counter Top Opening

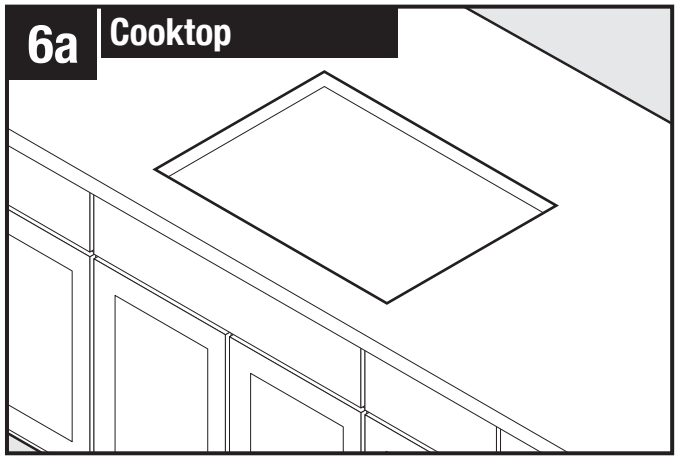

Gass Cooktop seal kit is recommended if installing a gas cooktop . See Optional Accessory page for more information.

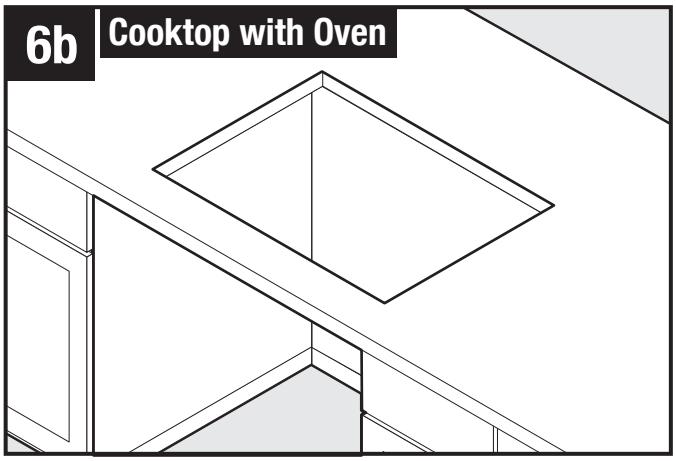

Gas Cooktop seal kit is recommended if installing a gas cooktop. See Optional Accessory page for more information.

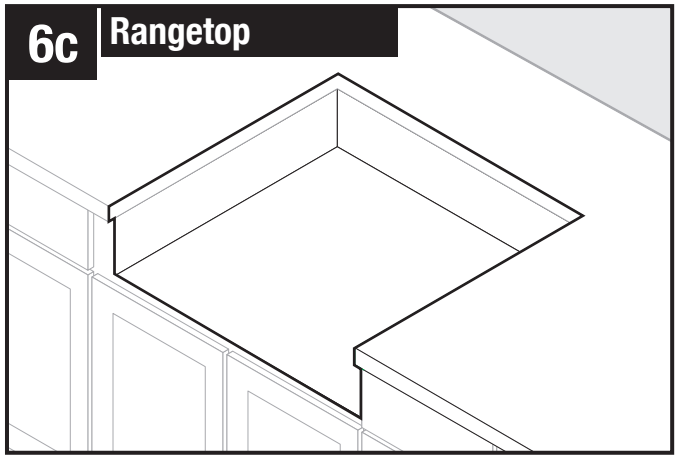

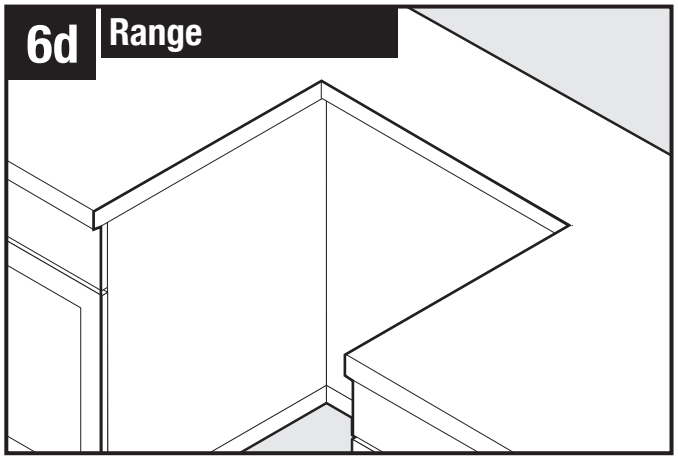

Range trim kit may be required. See Optional Accessory page for more information.

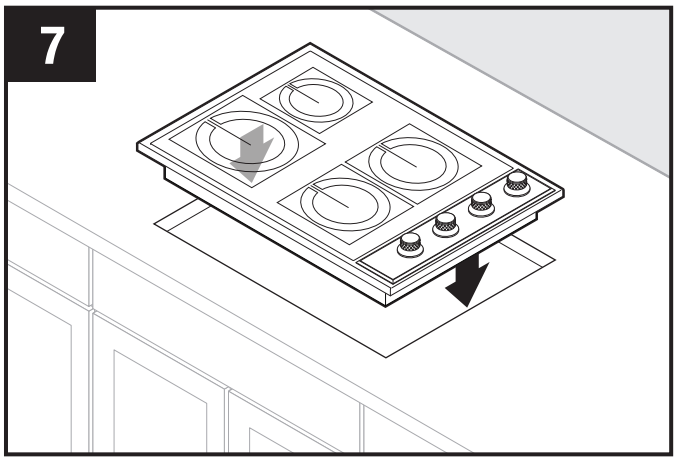

Place appliance.
Note: Cook top shown.

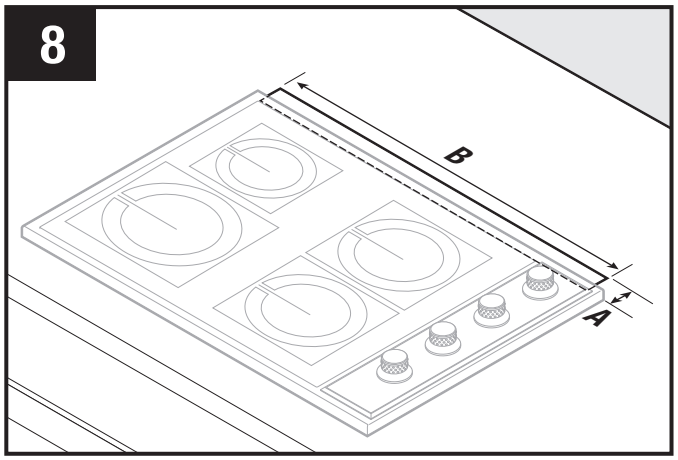

Center template against the back flange and mark downdraft opening.
A = 1-7/8" **B** = 27-1/4" DLI-E30ASX, 33-1/4" DLI-E36ASX

Cutting Counter Top Opening (continued)

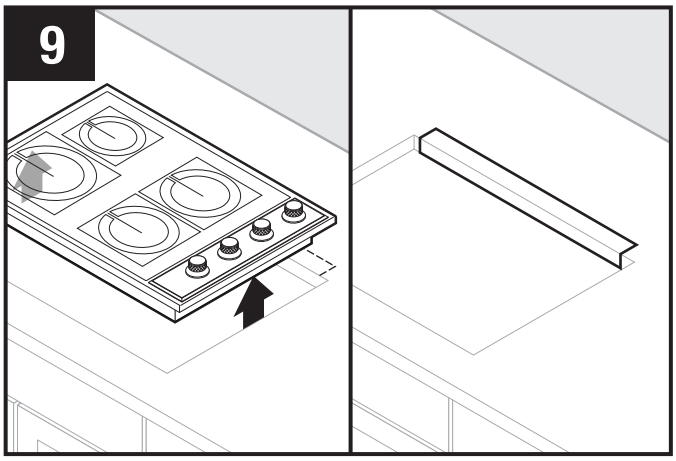

Remove cook top/appliance and cut opening.

Install Housing into Cabinet

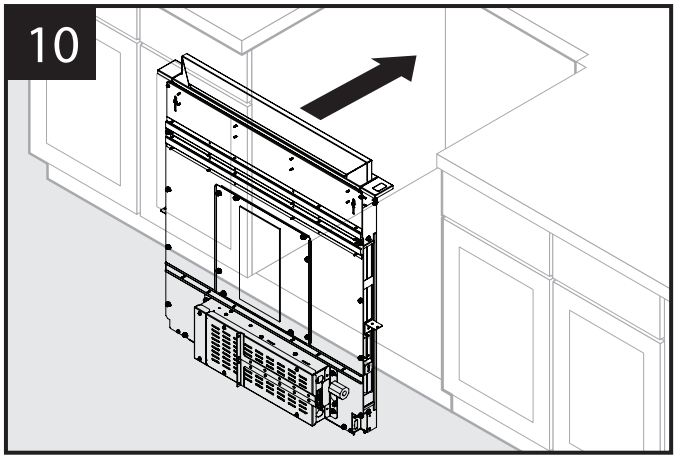

Set housing into cabinet.

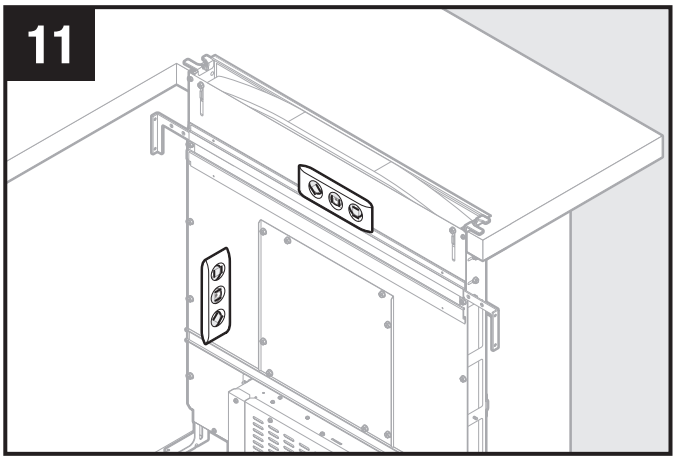

Level housing.
Note: Steps 11-15, right cabinet not shown for clarity.

Install Housing into Cabinet (continued)

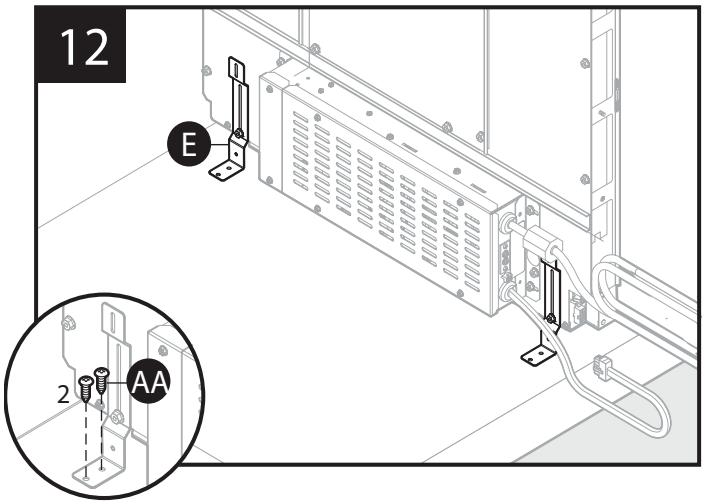

Attach support legs (E) to bottom of cabinet with two screws (AA) per leg. Tighten hex screws. Note: If cabinet bottom is removed, use blocks as spacers between floor and support legs.

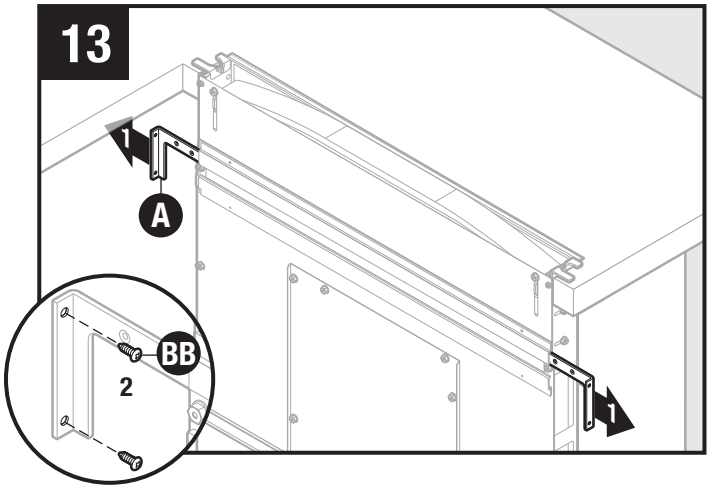

Extend upper support brackets (A) and attached to sides of cabinet with two screws (BB) per bracket.

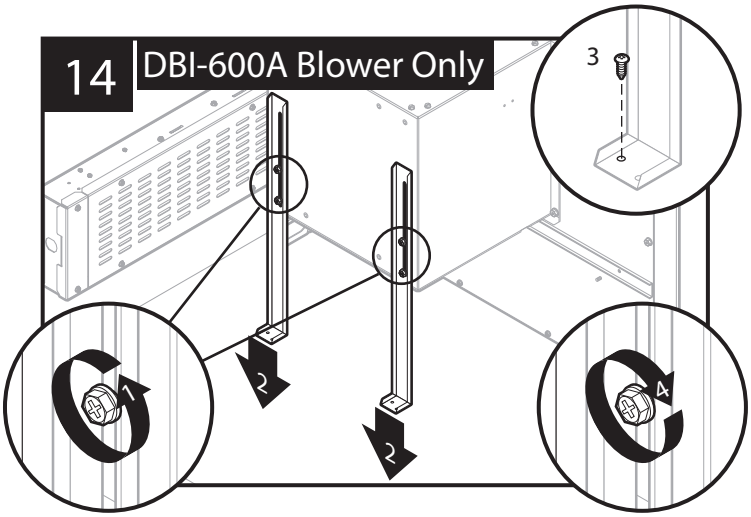

Loosen four screws attaching blower support legs to DBI-600A blower. Extend legs and secure to bottom of cabinet with one screw through each bracket. Re-tighten four blower screws.

Installing Finish Trim

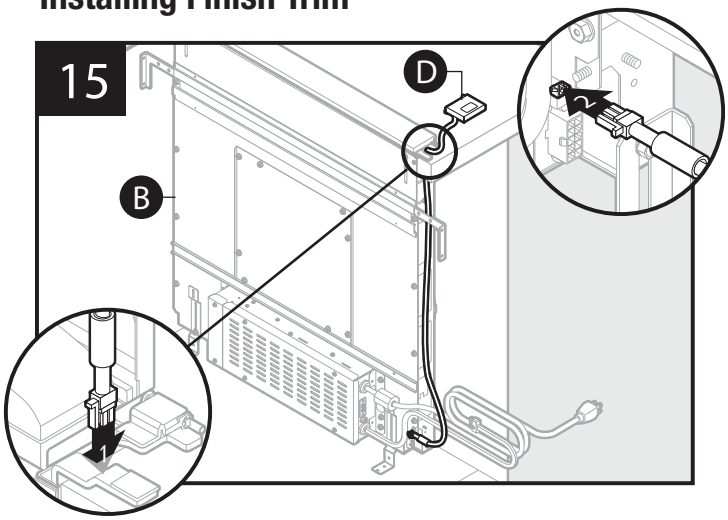

CAUTION

Only connect or disconnect UP BUTTON CABLE with main power off for at least 60 seconds.

Insert wiring harness with wire from right upper button (D) into opening in side of downdraft (B). Insert upper button (D) wiring harness into receptacle at lower right side of downdraft (B).

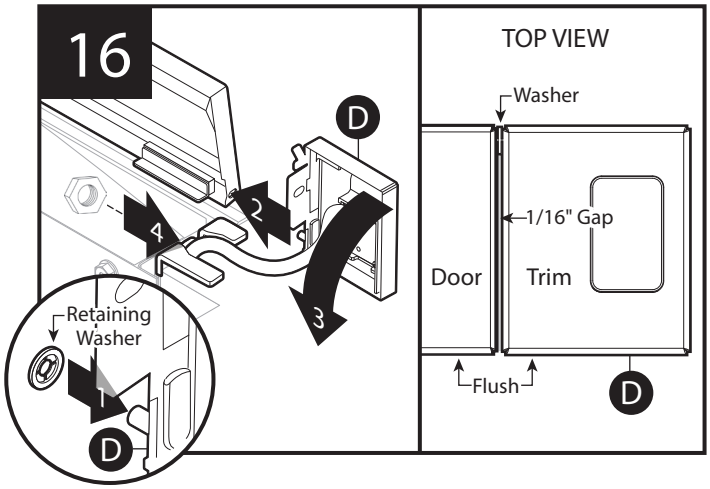

Position right trim cap (D). Place retaining washer on right trim cap. Insert hinge pin into slot of the flip door. Secure right trim cap by trim cap nut.
Note: Make sure trim: sits flat on countertop surface, is flush with top door, has 1/16” GAP between trim and top door, and wiring is not pinched.

Installing Finish Trim (continued)

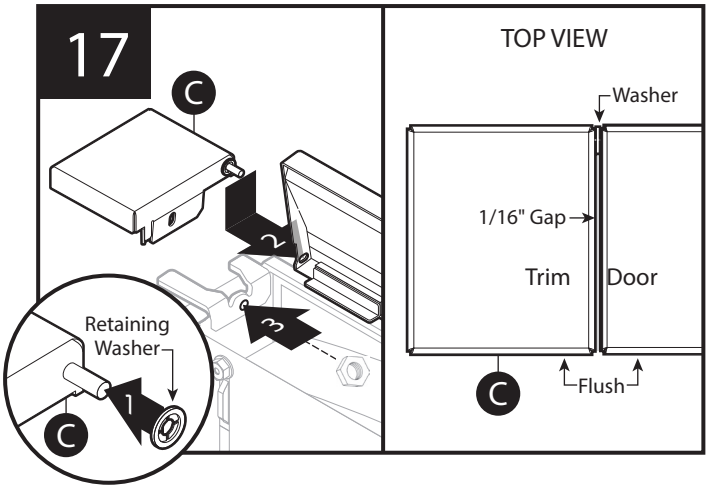

Place retaining washer on left trim cap (C). Insert hinge pin into slot of the flip door. Position left trim cap and flip door. Align trim caps and complete assembly by tightening trim cap nut.
Note: Make sure trim sits flat on countertop surface, is flush with top door, and has 1/16” GAP between trim and top door.
End cap trim peices are available, extending each trim by 1”. See Optional Accessory page for more information.

Installing Ductwork

CAUTION

BEFORE CUTTING HOLE IN CABINET FOR DUCTWORK, check for interference with floor joists, wall studs, electrical wiring, or plumbing.

- Refer to Ductwork Configurations in the Planning section of this document.
- Cut hole in cabinet as well as holes in wall or floor as necessary.
- Mount the roof or wall cap and work back towards the cabinet, attaching all ductwork, elbows and transitions as previously planned. Tape all ductwork connections to make them secure and air tight.
- Connect ductwork (and transition, if required) to downdraft.

Electrical Wiring Installation

DBI-600A Blower only

CAUTION

All electrical wiring should be done by a qualified person(s) in accordance with all applicable codes and standards.

- This downdraft blower using the DBI-600A Blower (purchase separately) draws 3.0 Amps and requires a 120 VAC, 60 Hz circuit.
- The unit has a 30 in. long power cord with a 3-pronged plug attached to the electrical panel. Plan to provide a grounded outlet in a location which will allow the unit's power cord to reach.
- Install electrical box according to local codes.

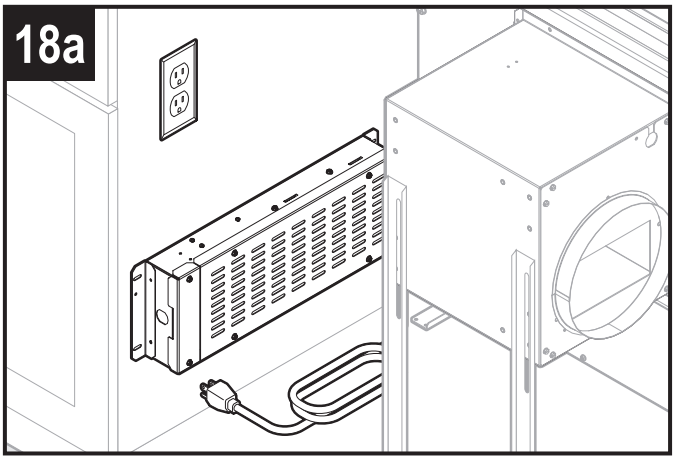

Mount a standard wiring box, with 3-pronged receptacle, within reach of downdraft's power cord. (Run appropriate power cable and connect it to receptacle.)

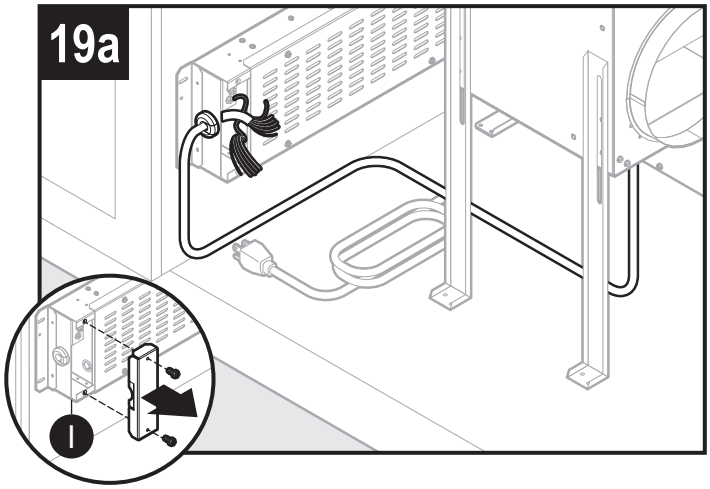

Remove electrical panel (I) cover and route blower wire into wiring box.

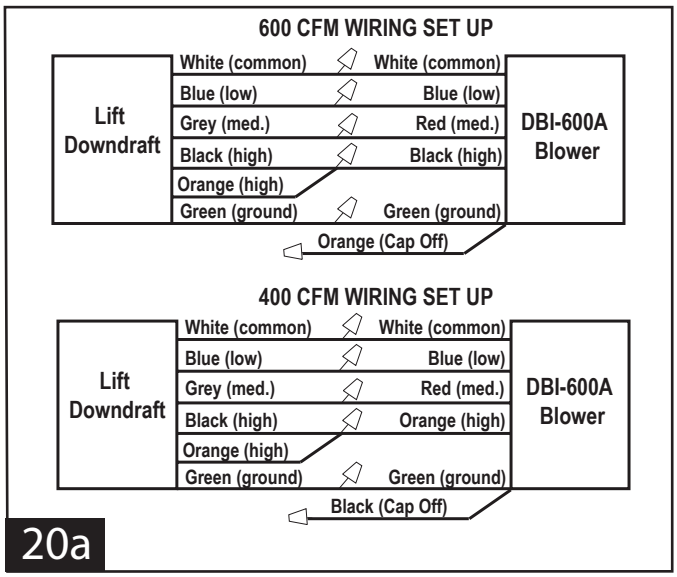

The DBI-600A blower is capable of maximum CFM of 600 CFM or 400 CFM. Connect blower wires to wire in electrical panal as needed for your CFM requirements.

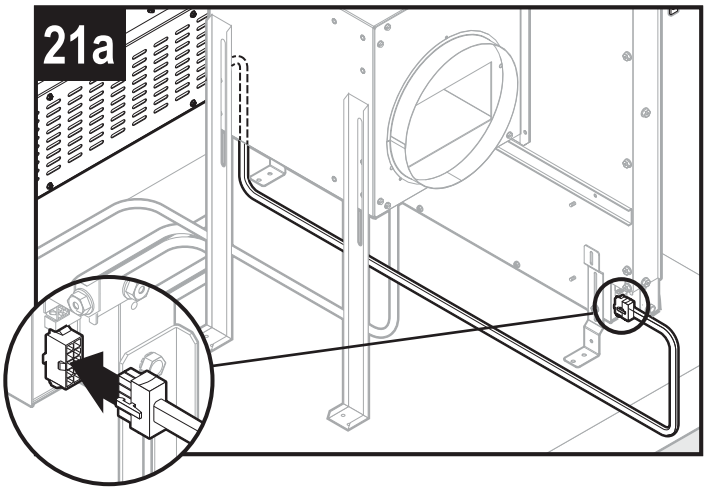

Plug electrical panel cable into lower receptacle on side of downdraft.

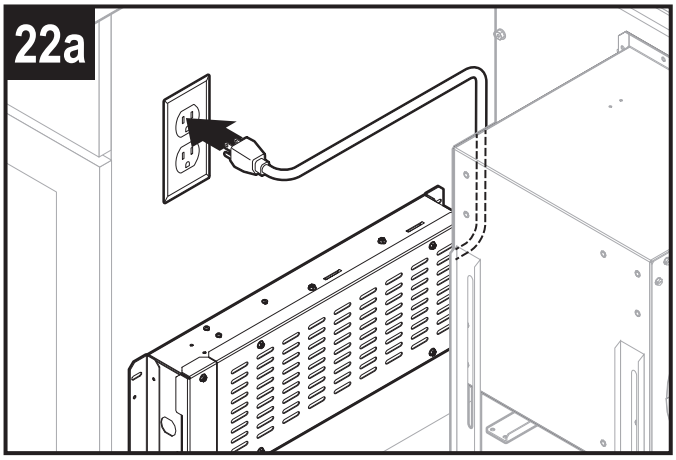

Plug downdraft's power cord into outlet.

Note: Make sure that power cord is routed away from the heat generated by the cooktop.

Exterior or In-Line Blower only

CAUTION

All electrical wiring should be done by a qualified person(s) in accordance with all applicable codes and standards.

- If using a remote blower (purchase separately), the system draws 6.0 Amps (max.) and requires a 120 VAC, 60 Hz circuit.
- The unit has a 30 in. long power cord with a 3-pronged plug attached to the electrical panel. Plan to provide a grounded outlet in a location which will allow the unit's power cord to reach.
- Install electrical box according to local codes.

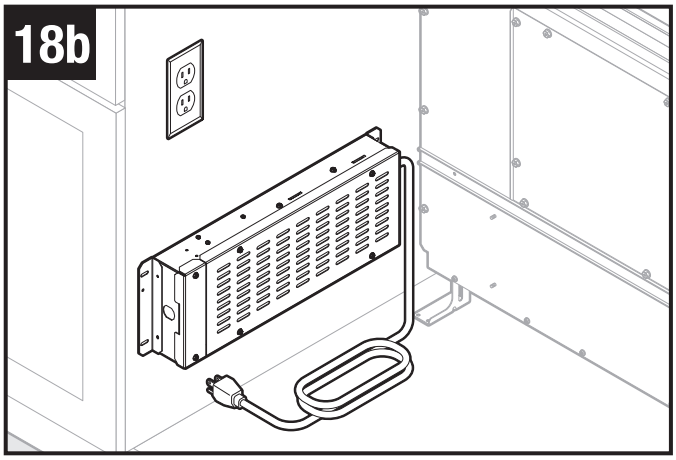

Mount a standard wiring box, with 3-pronged receptacle, within reach of downdraft's power cord. Run appropriate power cable and connect it to receptacle.

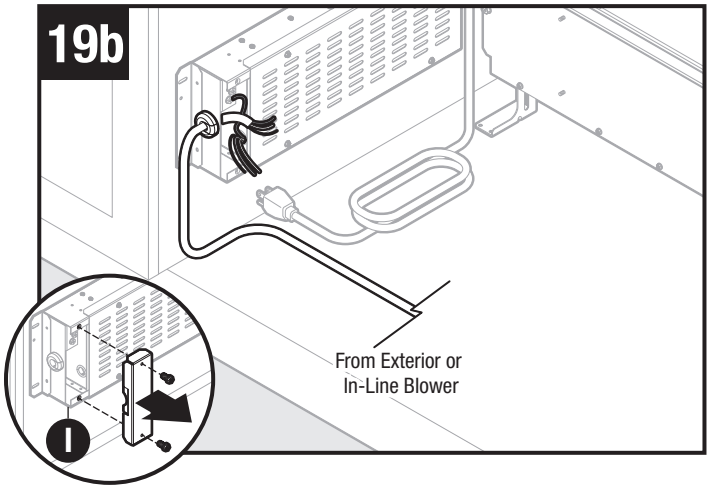

Remove wiring box cover and route blower wire into wiring box.

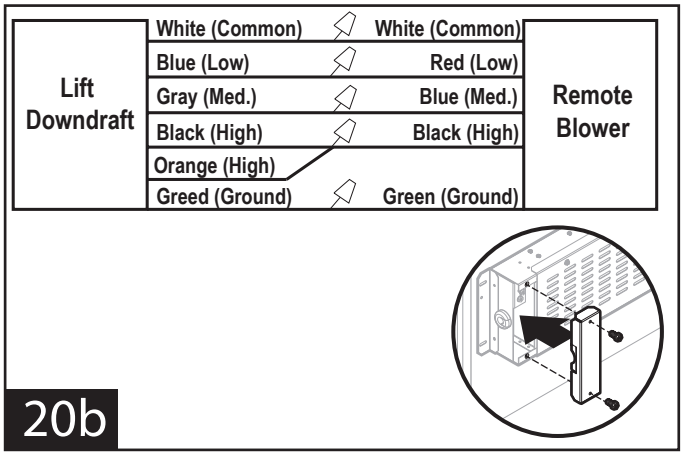

Connect blower wires to wires in wiring box. Replace wiring box cover.

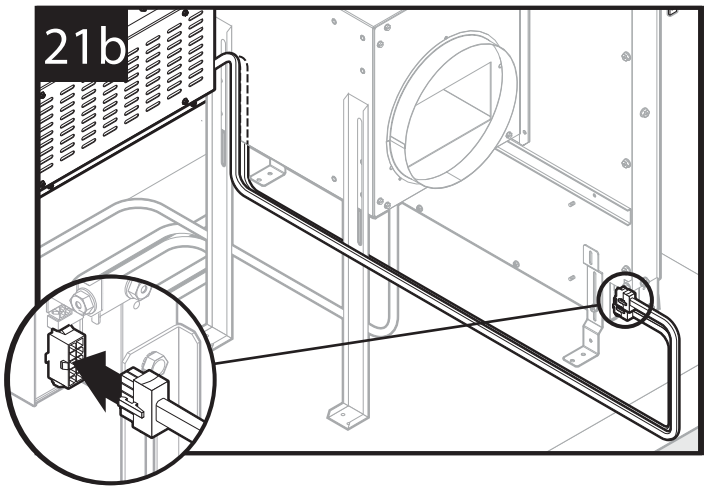

Plug electrical panel cover into lower receptacle as shown.

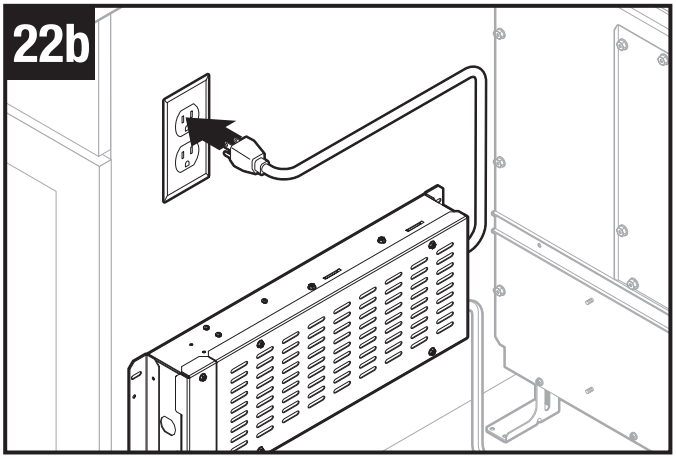

Plug downdraft's power cord into outlet.
Note: Make sure that power cord is routed away from the heat generated by the cooktop.

Install Cooking Appliance

1. Align the cooking appliance with downdraft and fasten appliance in place following appliance instructions.

Note: Accurate alignment of cooking appliance and downdraft is necessary to ensure that there is no interference when air vent is raised and lowered. There should be a gap of 1/32" - 1/16" between the back of the cooktop and the front of the downdraft cover.

Control Panel and Up Button

Fan + Button
- Press to increase fan speed.
- After maximum speed is reached, press + button once more to turn fan off.

Fan - Button
- Press to decrease fan speed.
- After minimum speed is reached, press - button once more to turn fan off.

2 Level Light Control
- Press once for dim level.
- Press 2x for bright level.
- Press 3x to turn light off.

30-Hour Filter Clean Reminder
- After 30 hours of blower “ON” time, filter clean icon will blink continuously.
- To reset, touch and hold icon for 2 or more seconds. Indicator will turn off.

Up/Down Button
- To retract chimney, touch down button. Any feature that is active will shut off.
- Touch up button on right trim to raise chimney. All functions will return to their previous settings.

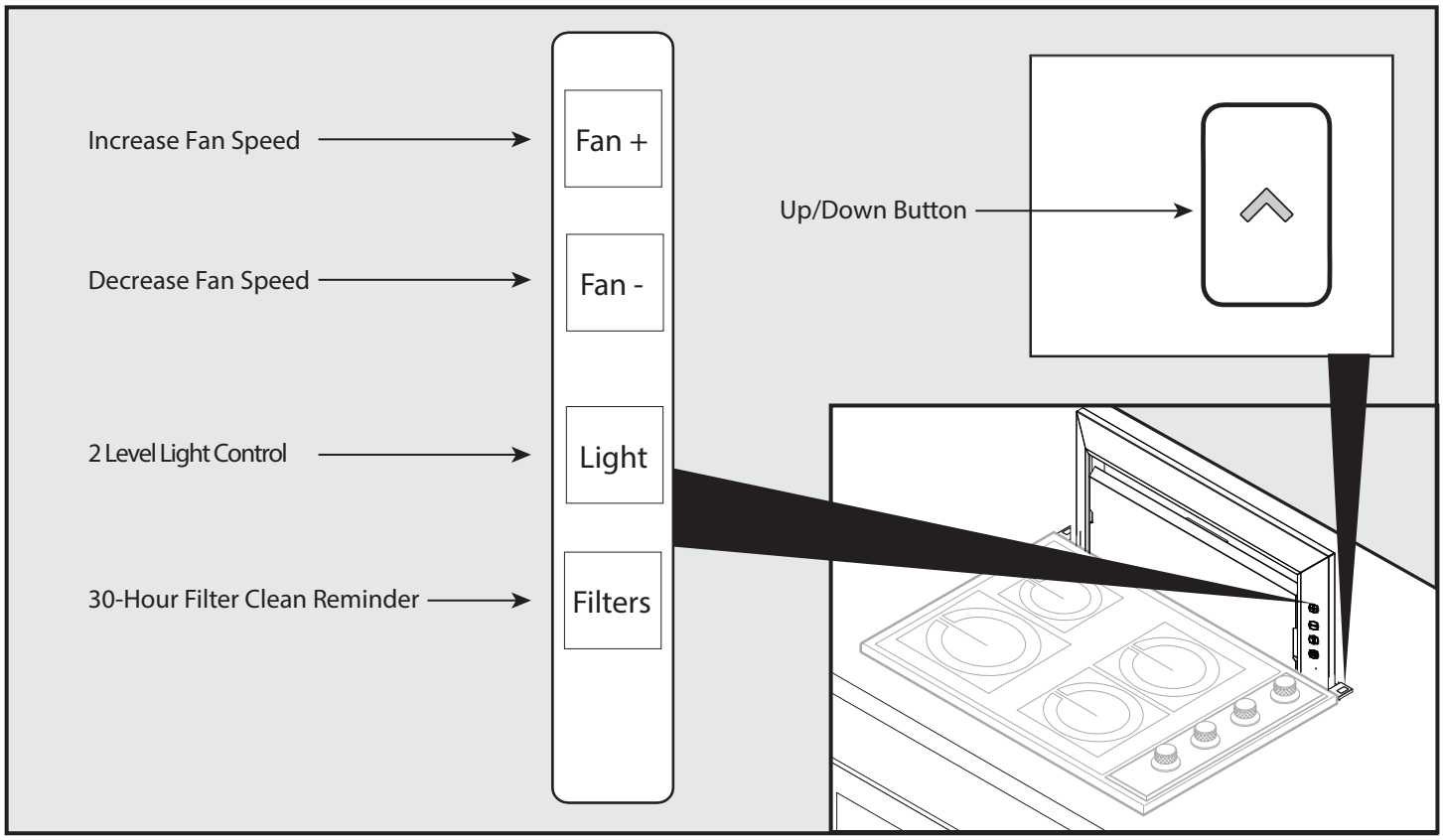

Cooking

WARNING

Always disconnect electric power supply before cleaning and/or servicing unit.

Always turn the downdraft blower on before you begin cooking to establish an air flow in the kitchen. Let the blower run for a few minutes to clean the air after you turn the cooktop off. This will keep the whole kitchen cleaner and brighter.

It is recommended to use the rear burners when cooking with tall pots or when the cooking method will generate high amounts of smoke or steam. The combination of using the rear burners and operating the unit at high speed will increase the likelihood that all the smoke and steam will be removed by the downdraft.

Cleaning

CAUTION

To Clean grease filters:
Lift FRONT PANEL up and out and take out the **GREASE FILTERS**. Wash filters in a mild detergent solution or a dishwasher. Replace filters and front panel before using downdraft.

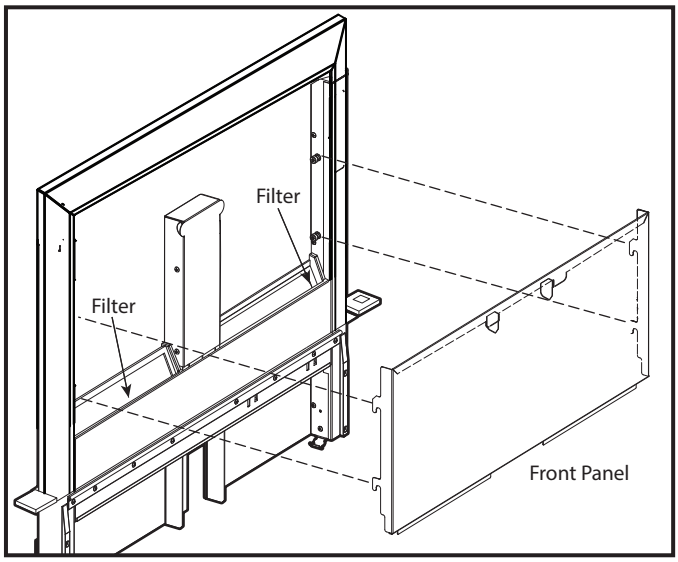

CAUTION

To clean inside chimney:
Lift FRONT PANEL up and out and take out the GREASE FILTERS. Use a mild detergent. DO NOT USE ABRASIVE CLOTH, STEEL WOOL PADS, OR SCOURING POWDERS. Replace filters and front panel before using downdraft.

Servicing
It may be necessary to remove the downdraft blower system from the cabinet in order to service components such as the blower motor or air vent mechanism.

Disconnect power to the cooktop and remove it first. Reverse the steps under “INSTALL HOUSING INTO CABINET” to remove the downdraft from the cabinet.

Optional Accessories

Accessory	Description
Model DDA-0002 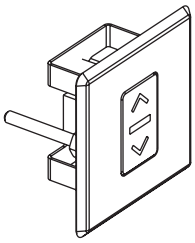	**REMOTE UP/DOWN CONTROL** Use when you cannot reach the UP/DOWN Button on the downdraft chimney. Can be located on counter top, face of cabinetry or on the side cabinet of an island. Cut-out size: 2 1/4" H x 2" W Cannot be used where remote control will interfere with cooking, where hot pans could be set, or where hot liquids could be spilled on the control. (Remote wiring connects with 6-pin connection)
MODELS **DDS-0030** **DDS-0036**	**GAS COOKTOP SEAL KIT** Recommended for use with all gas cooktops. Includes trim bracket and trim seal. 30", 36" widths.
MODELS **MUA008A** **MUA010A** 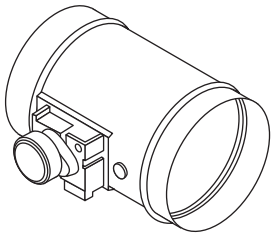	**MAKE-UP AIR DAMPER** Use to provide make-up air (when called for) to keep the home comfortable by allowing the downdraft to operate at optimum levels.
MODELS **DDT-0030** **DDT-0036** 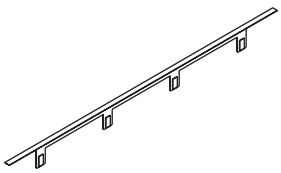	**RANGE TRIM KIT** Use with free-standing range - where a gap is present between back of range and downdraft. 30", 36" widths.

Accessory	Description
MODEL 11030132 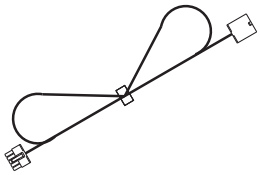	**EXTENSION CABLE - 5-FT.** Use where electrical panel is remotely mounted. Extends electrical panel cable an additional 5 feet.
MODEL ZRC-00LF 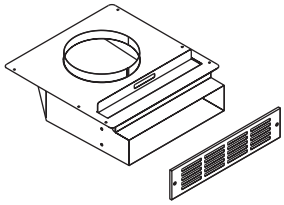	**NON-DUCT RECIRCULATING KIT** Use where ducting is not feasible or available. Mount to toe kick or base of a cabinet and attach directly to Model DBI-600A Blower using 8" round duct. Kit can be rotated so that the exhaust is not directly at your feet. Includes recirculating filter and decorative cover plate.
MODEL Z0F-C006 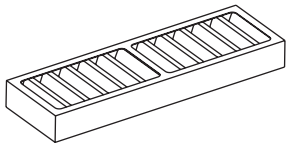	**RECIRCULATION FILTER REPLACEMENT** Replacement filter for ZRC-00LF Non-Duct Recirculating Kit. Use to effectively capture cooking contaminants.
MODEL AK00070 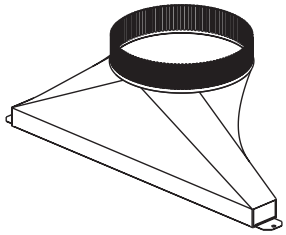	**1-7/8" X 19" TO 8" ROUND TRANSITION** Rectangular to 8" round transition for left, right, or rear exhaust - using Model DBI-600A Blower. Can be attached to downdraft unit or rectangular duct (AK00072). Includes S-clips for easy, secure attachment.
MODEL AK00071 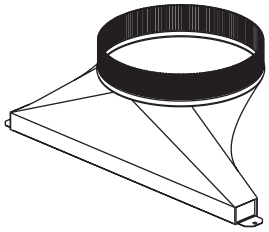	**1-7/8" X 19" TO 10" ROUND TRANSITION** Rectangular to 10" round transition for left, right, or rear exhaust - using external blower. Can be attached to downdraft unit or rectangular duct (AK00072).
MODEL AK00072 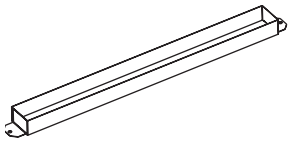	**RECTANGULAR ADAPTOR FOR 1-7/8" X 19"** Use to connect 1-7/8" x 19" rectangular duct directly to downdraft when using side or rear exhaust.

Optional Accessories (continued)

Accessory	Description
MODEL DDE-0001 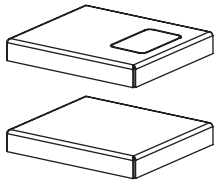	**END CAP TRIM EXTENSION +1" WIDTH - LH & RH** Use left and right to increase the overall trim width by 1".
MODEL 54190053 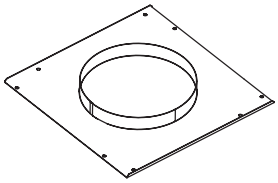	**FRONT PANEL ROUGH-IN PLATE - 8" ROUND** Use where 8" round duct or elbow attaches to front of airbox (Model DBI-600A used as remote blower installation).
MODEL 54190054 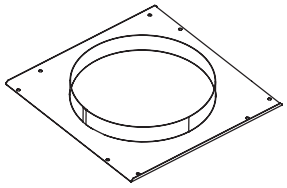	**FRONT PANEL ROUGH-IN PLATE - 10" ROUND** Use where 10" round duct or elbow attaches to front of airbox (exterior or in-line blower installation).
MODEL AK00080 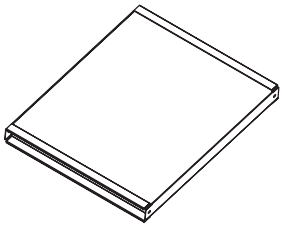	**RECTANGULAR DUCT - 2-FT. SECTIONS (1-7/8" X 19")** Galvanized steel construction.

Internal Blower (DBI-600A) - Front Mounted to Downdraft

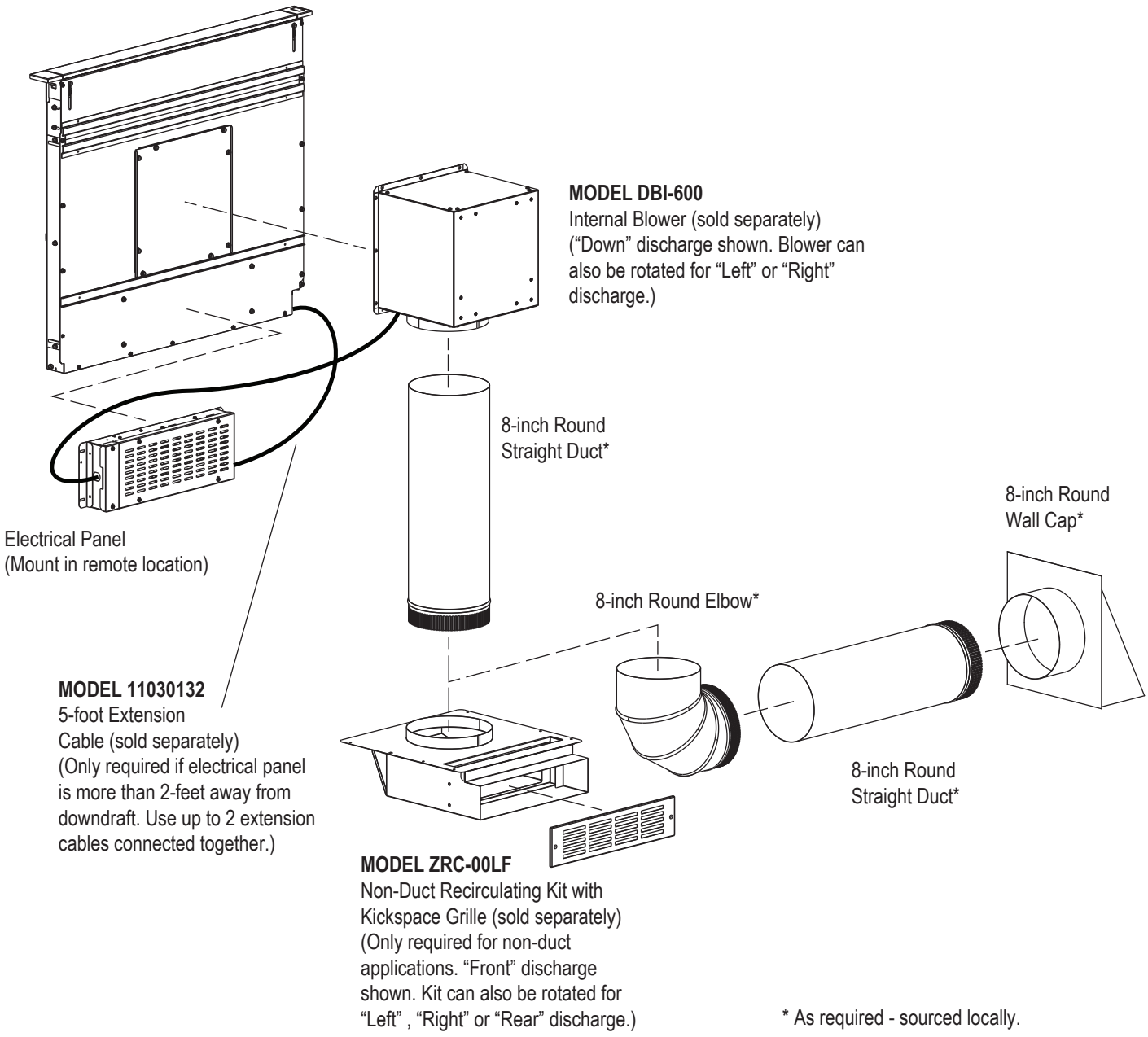

* As required - sourced locally.

Internal Blower (DBI-600A) - Remote Mounted - Front Outlet

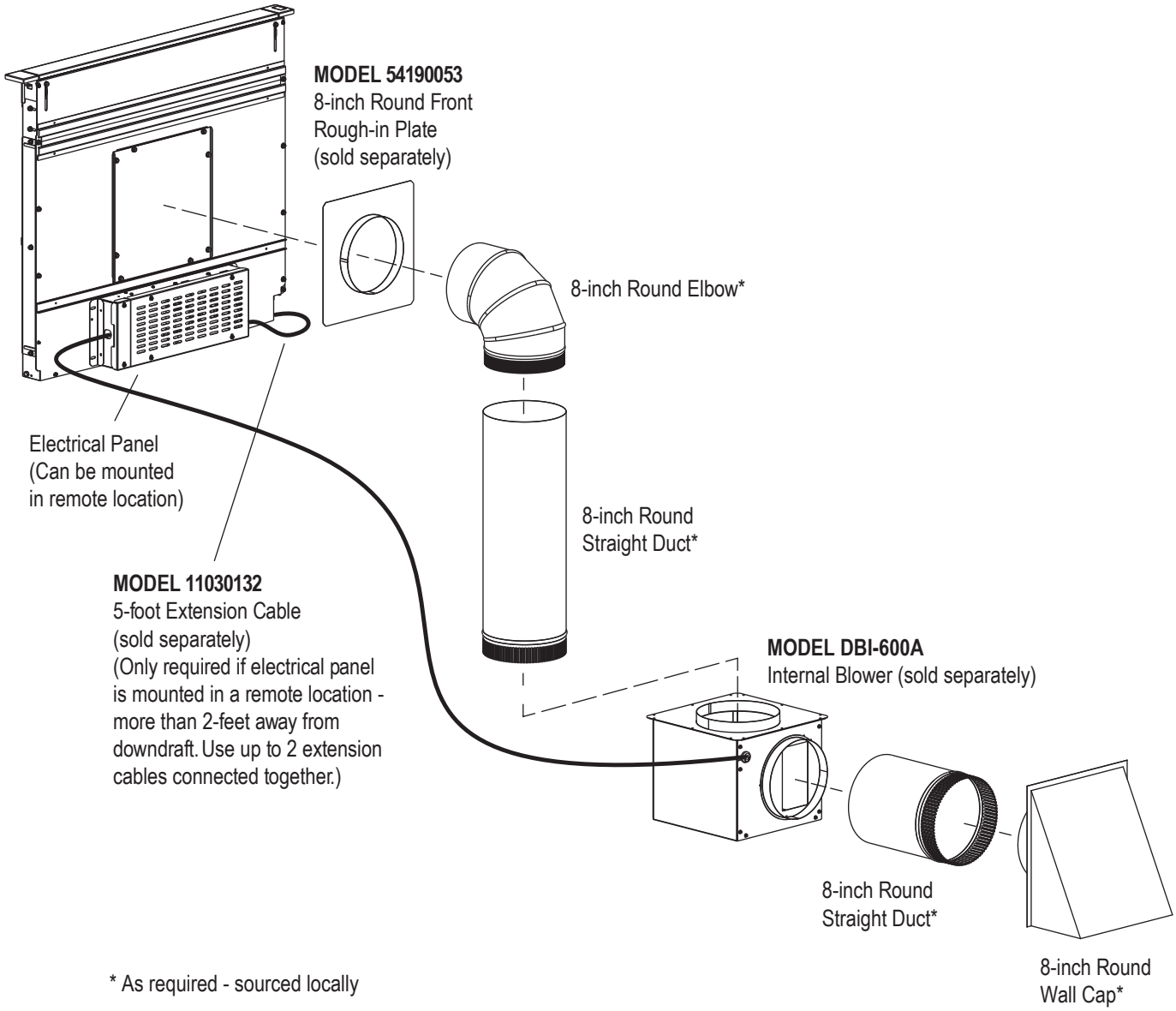

* As required - sourced locally

Internal Blower (DBI-600A) - Remote Mounted - Side Outlet

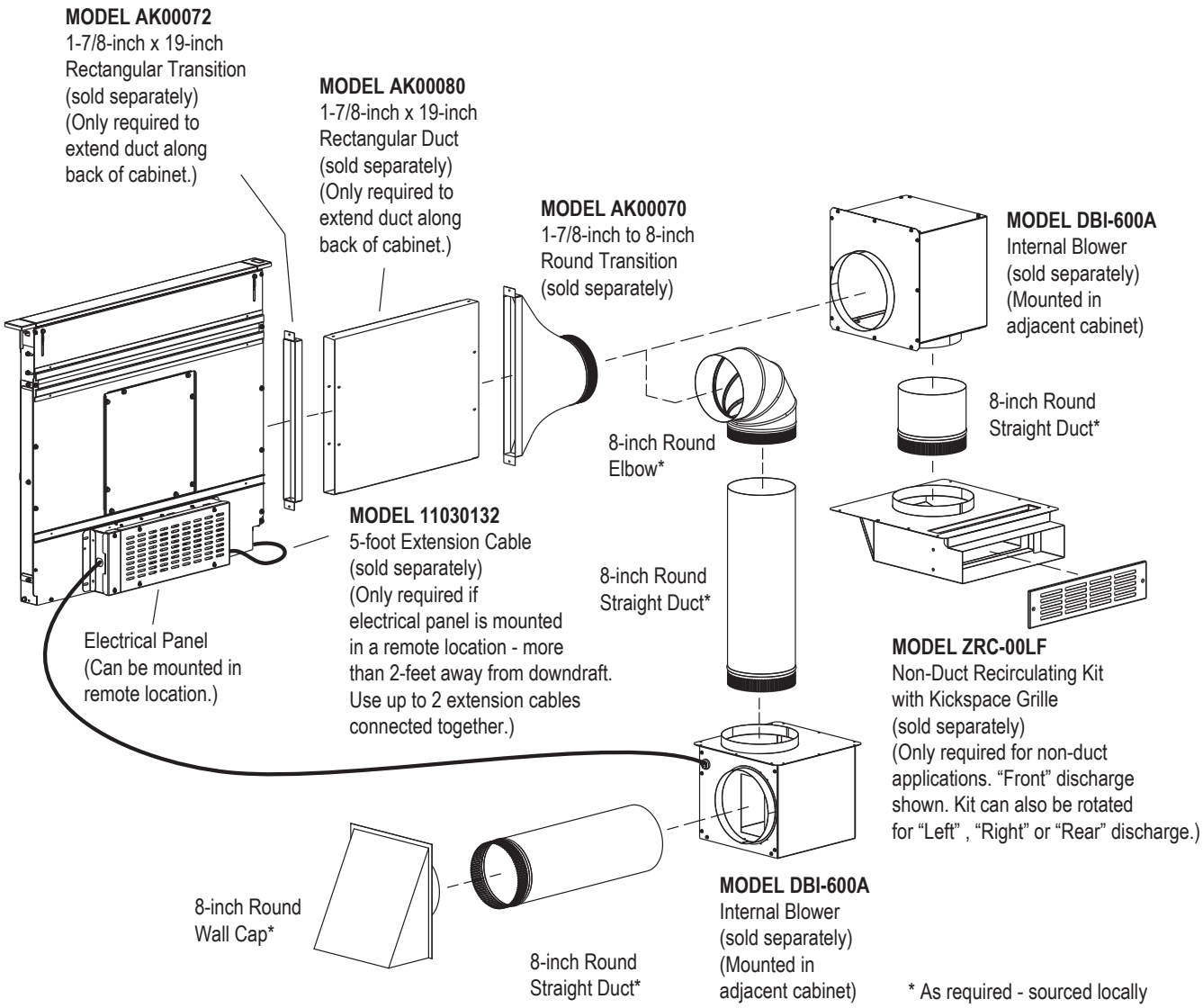

Internal Blower (DBI-600A) - Remote Mounted - Rear Outlet

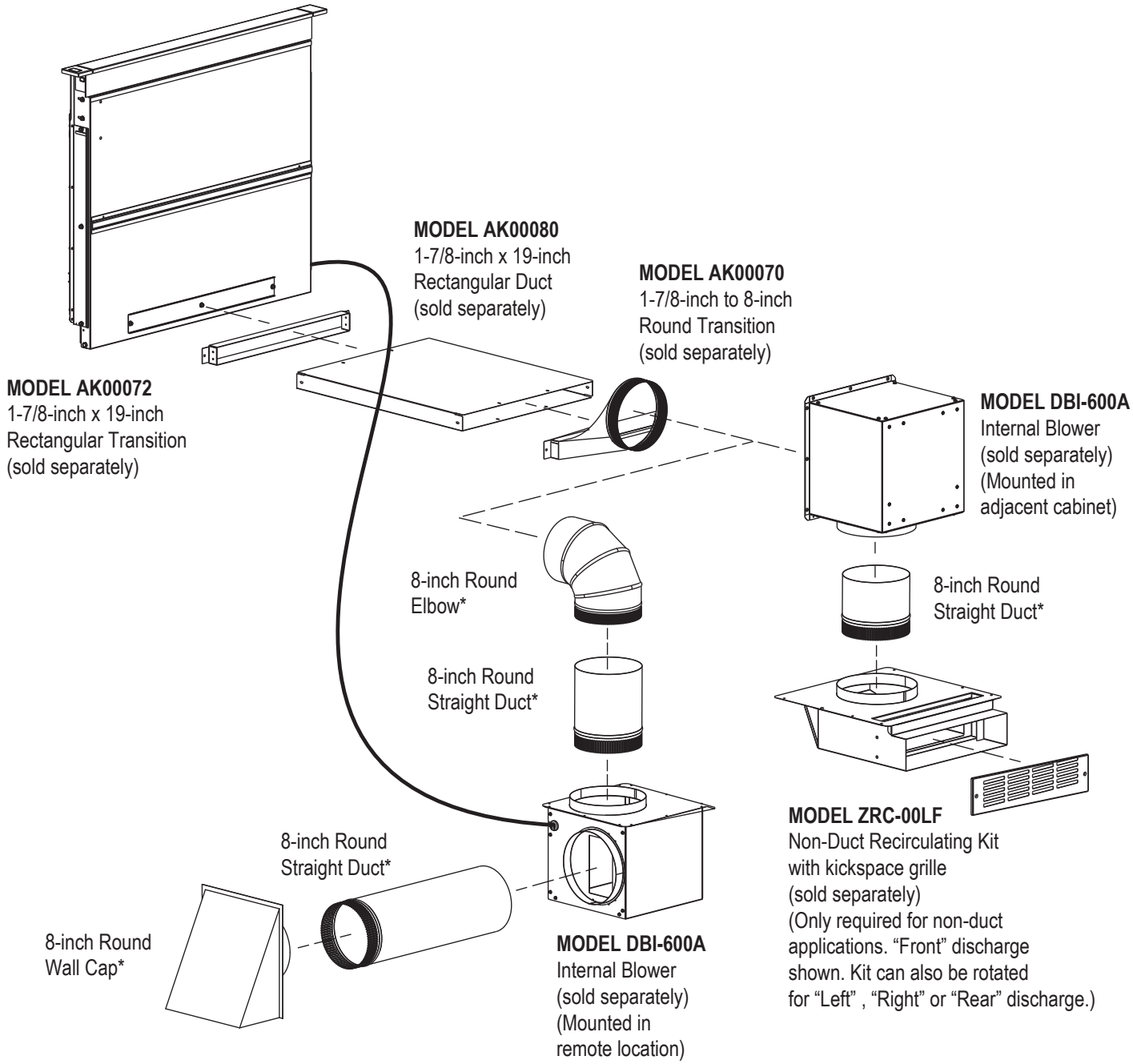

* As required - sourced locally

Internal Blower (DBI-600A) - Remote Mounted - Below Outlet

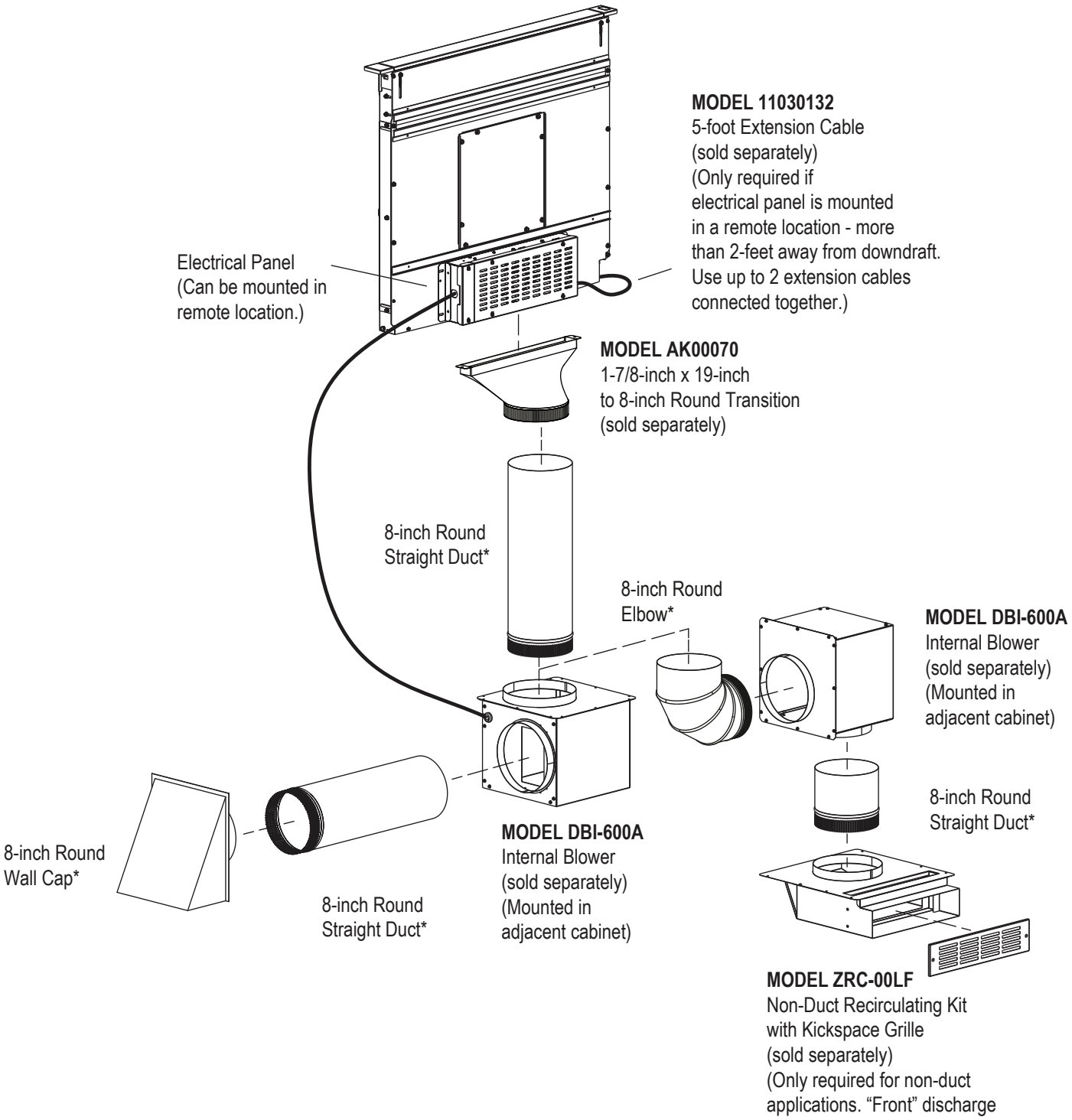

External or In-Line Blower - Front Outlet

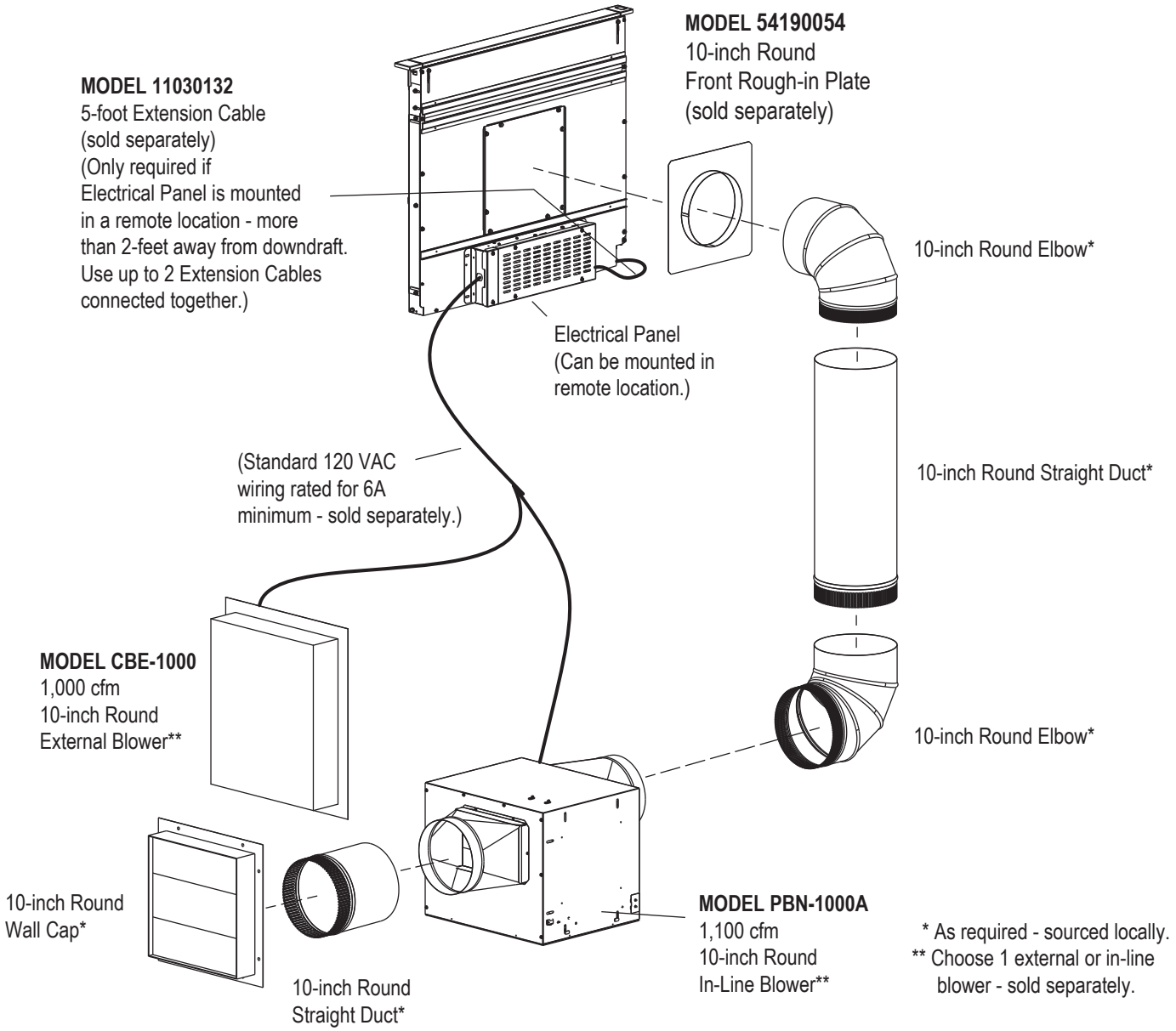

* As required - sourced locally.
** Choose 1 external or in-line blower - sold separately.

Blower duct routing configuration G

External or In-Line Blower - Side or Rear Outlet

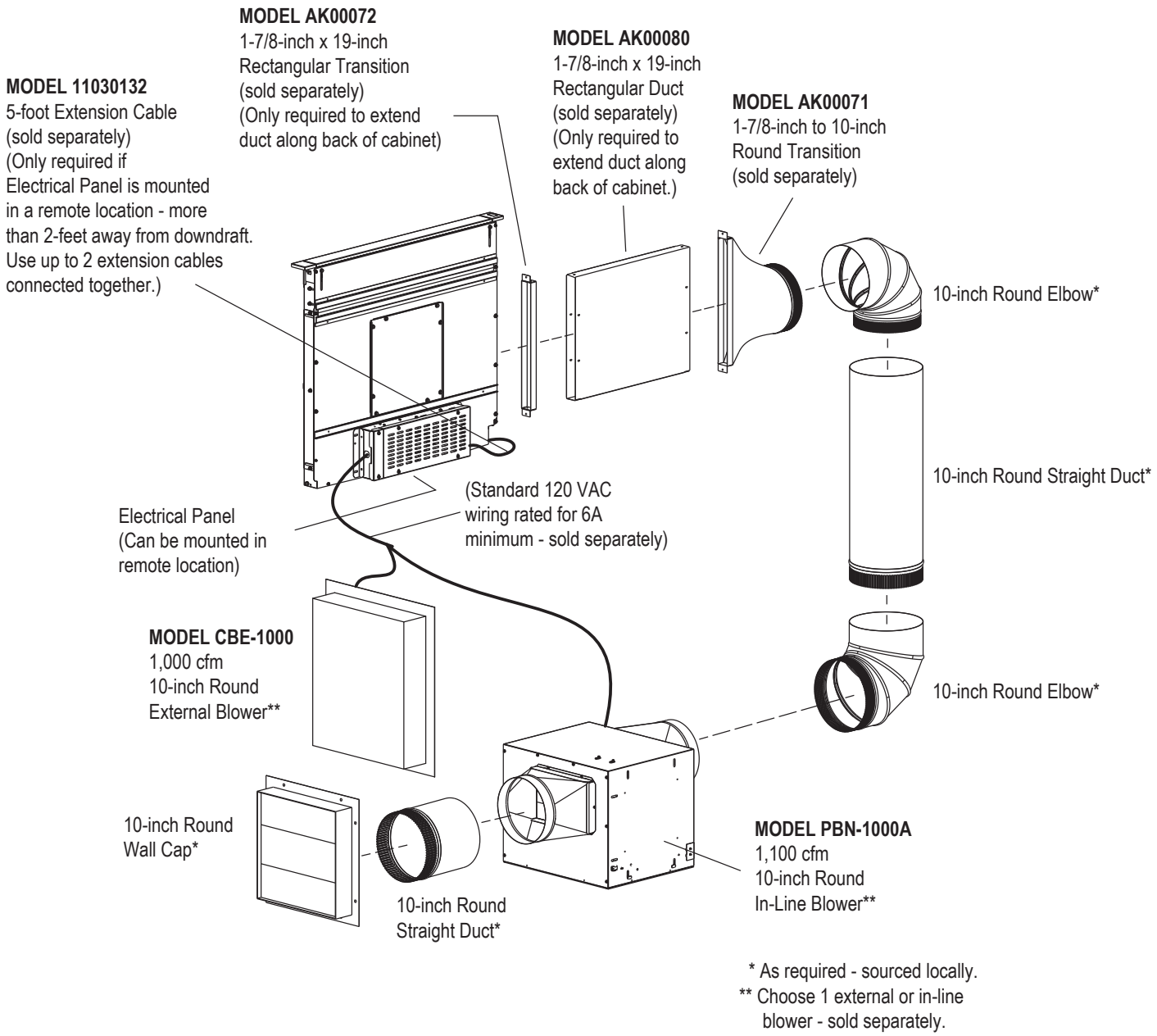

* As required - sourced locally.
** Choose 1 external or in-line blower - sold separately.

External or In-Line Blower - Below Outlet

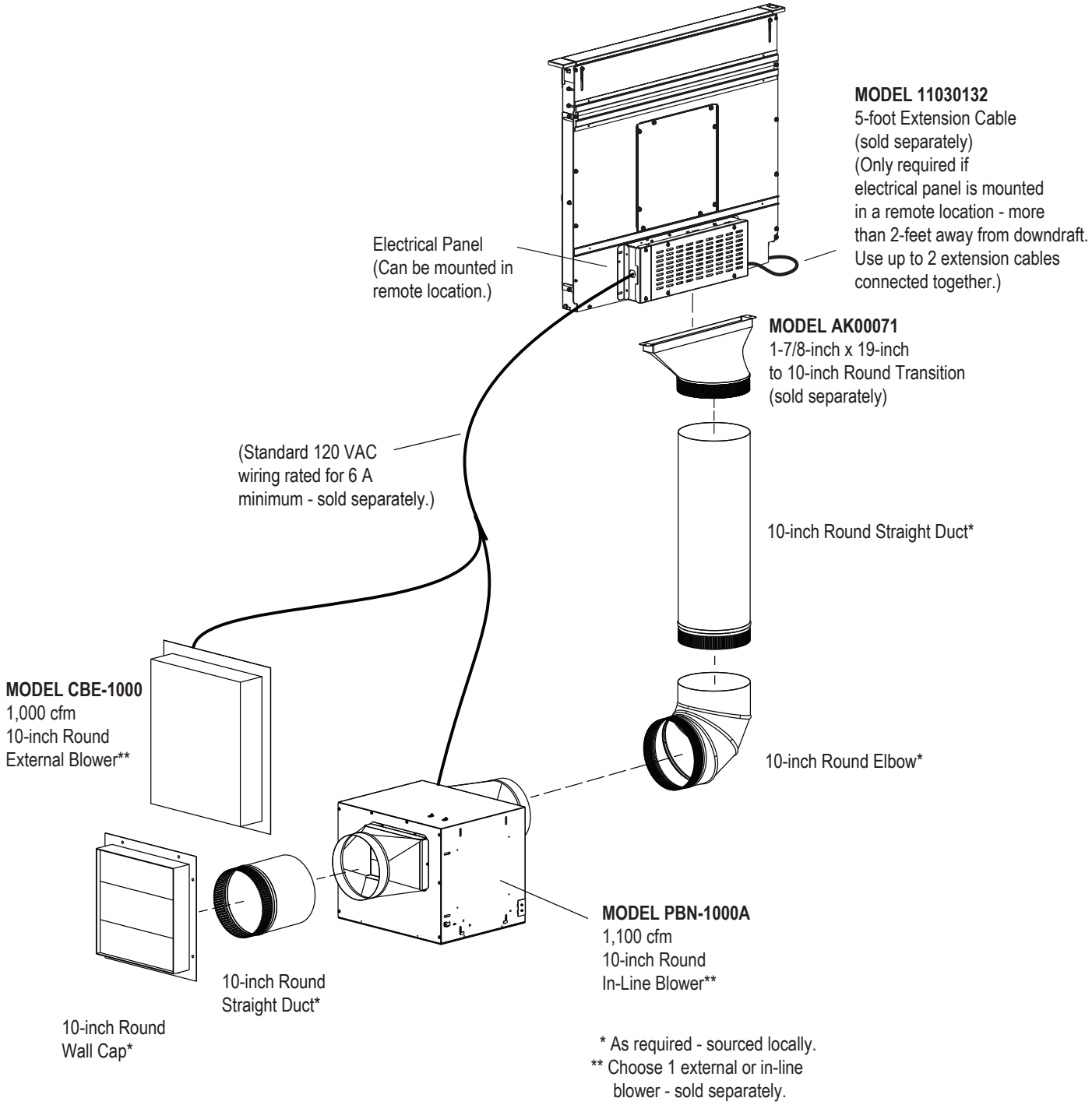

* As required - sourced locally.
** Choose 1 external or in-line blower - sold separately.

Wiring Diagram

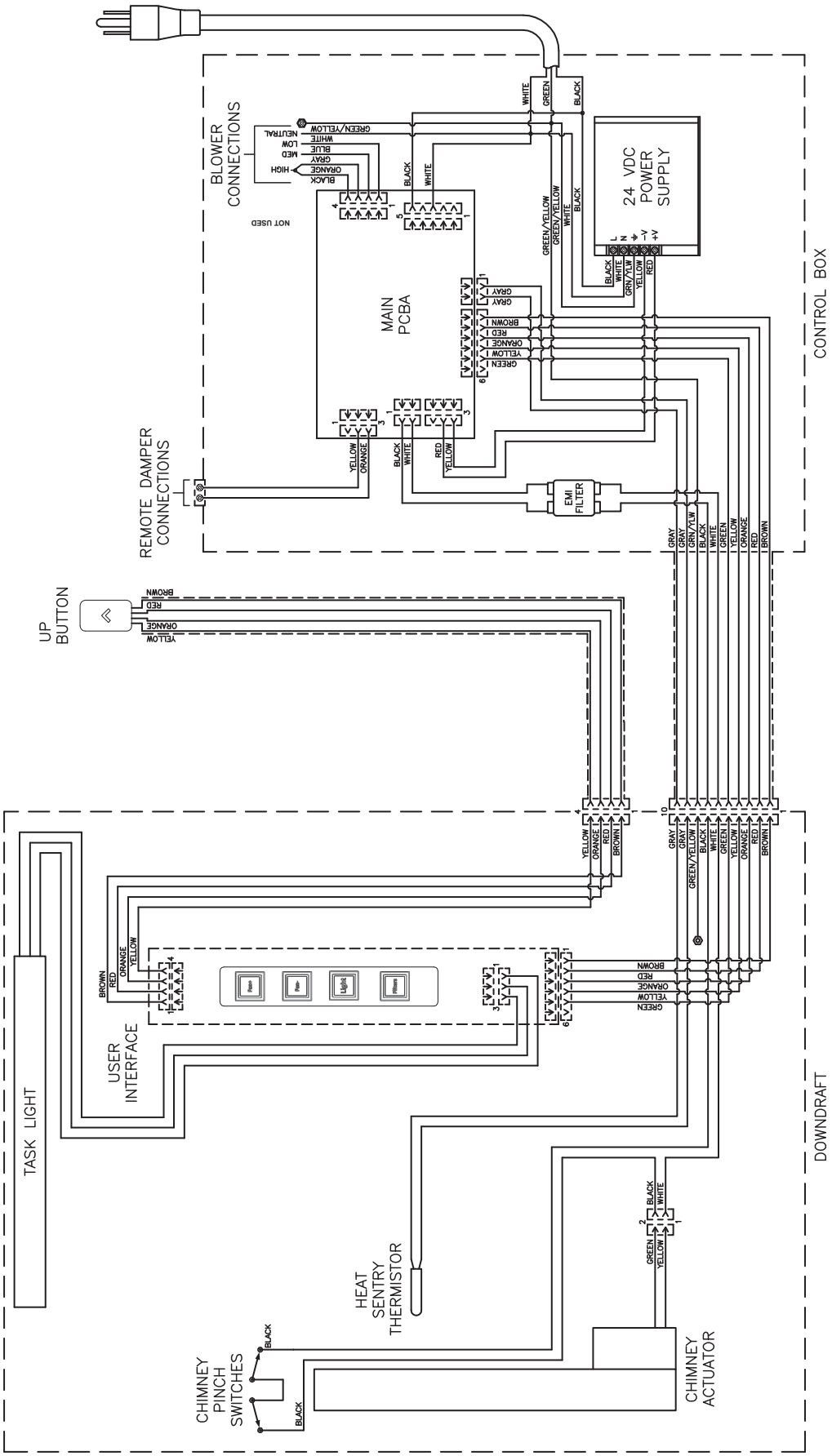

Dimensional Drawing

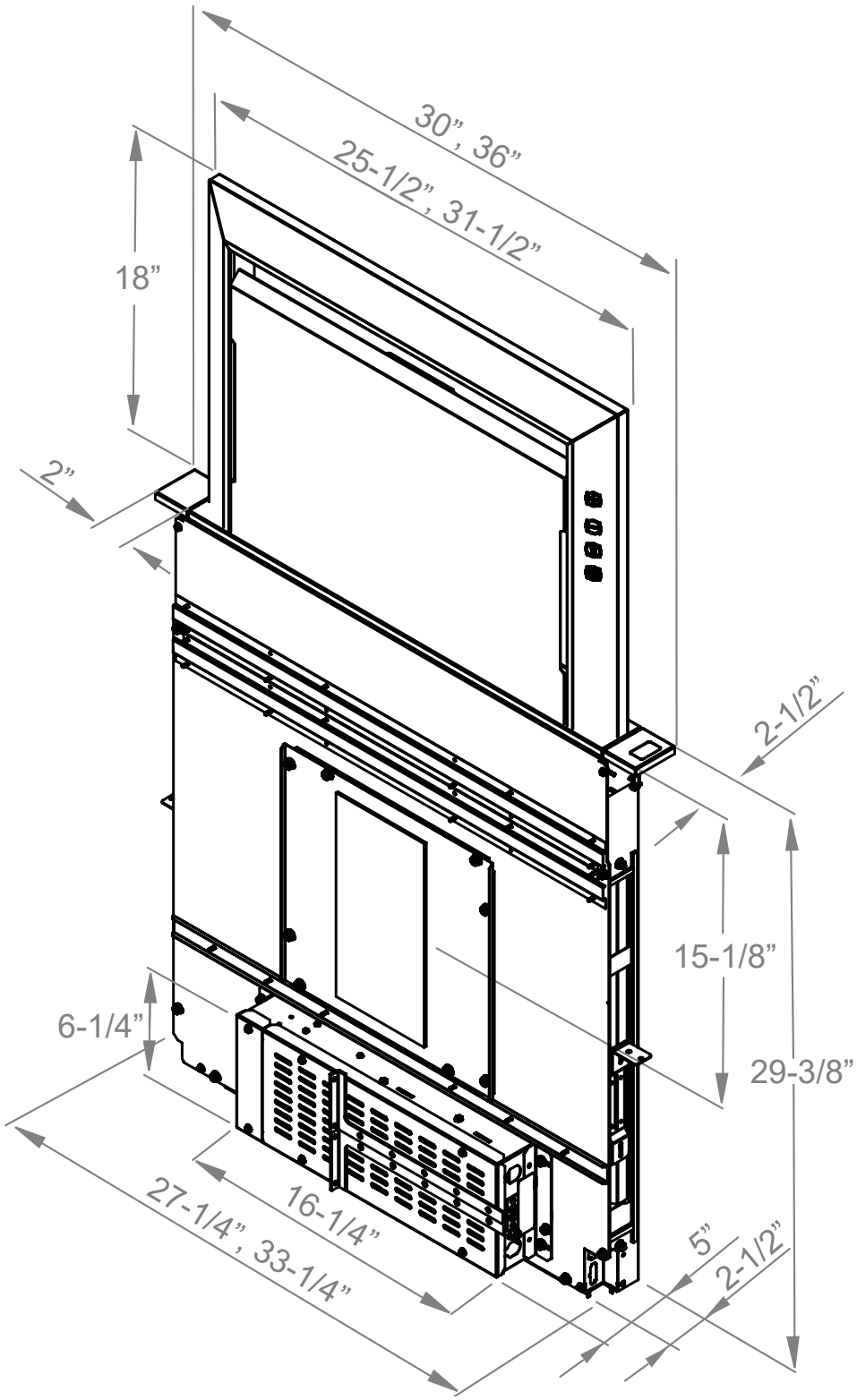

ZEPHYR
Limited Warranty

STAPLE YOUR RECEIPT HERE
Proof of the original purchase date is needed to obtain service under warranty

TO OBTAIN SERVICE UNDER WARRANTY OR FOR ANY SERVICE RELATED QUESTIONS, please call:
1-888-880-8368

Zephyr Ventilation, LLC (referred to herein as “we” or “us”) warrants to the original consumer purchaser (referred to herein as “you” or “your”) of Zephyr products (the “Products”) that such Products will be free from defects in materials or workmanship as follows:

Two Year Limited Warranty for Parts: For two years from the date of your original purchase of the Products, we will provide, free of charge, Products or parts (including LED light bulbs, if applicable) to replace those that failed due to manufacturing defects subject to the exclusions and limitations below. We may choose, in our sole discretion, to repair or replace parts before we elect to replace the Products.

One Year Limited Warranty for Labor: For one year from the date of your original purchase of the Products, we will provide, free of charge, the labor cost associated with repairing the Products or parts to replace those that failed due to manufacturing defects subject to the exclusions and limitations below. After the first year from the date of your original purchase, you are responsible for all labor costs associated with this warranty.

Warranty Exclusions: This warranty covers only repair or replacement, at our option, of defective Products or parts and does not cover any other costs related to the Products including but not limited to: (a) normal maintenance and service required for the Products and consumable parts such as fluorescent, incandescent or halogen light bulbs, mesh and charcoal filters and fuses; (b) any Products or parts which have been subject to freight damage, misuse, negligence, accident, faulty installation or installation contrary to recommended installation instructions, improper maintenance or repair (other than by us); (c) commercial or government use of the Products or use otherwise inconsistent with its intended purpose; (d) natural wear of the finish of the Products or wear caused by improper maintenance, use of corrosive and abrasive cleaning products, pads, and oven cleaner products; (e) chips, dents or cracks caused by abuse or misuse of the Products; (f) service trips to your home to teach you how to use the Products; (g) damage to the Products caused by accident, fire, floods, acts of God; or (h) Custom installations or alterations that impact serviceability of the Products. If you are outside our service area, additional charges may apply for shipping costs for warranty repair at our designated service locations and for the travel cost to have a service technician come to your home to repair, remove or reinstall the Products. After the first year from the date of your original purchase, you are also responsible for all labor costs associated with this warranty. All Products must be installed by a qualified professional installer to be eligible for warranty repairs or service.

Limitations of Warranty. OUR OBLIGATION TO REPAIR OR REPLACE, AT OUR OPTION, SHALL BE YOUR SOLE AND EXCLUSIVE REMEDY UNDER THIS WARRANTY. WE SHALL NOT BE LIABLE FOR INCIDENTAL, CONSEQUENTIAL OR SPECIAL DAMAGES ARISING OUT OF OR IN CONNECTION WITH THE USE OR PERFORMANCE OF THE PRODUCTS. THE EXPRESS WARRANTIES IN THE PRECEDING SECTION ARE EXCLUSIVE AND IN LIEU OF ALL OTHER EXPRESS WARRANTIES. WE HEREBY DISCLAIM AND EXCLUDE ALL OTHER EXPRESS WARRANTIES FOR THE PRODUCTS, AND DISCLAIM AND EXCLUDE ALL WARRANTIES IMPLIED BY LAW, INCLUDING THOSE OF MERCHANTABILITY AND FITNESS FOR A PARTICULAR PURPOSE. Some states or provinces do not allow limitations on the duration of an implied warranty or the exclusion or limitation of incidental or consequential damages, so the above limitations or exclusions may not apply to you. To the extent that applicable law prohibits the exclusion of implied warranties, the duration of any applicable implied warranty is limited to the same two-year and one-year periods described above if permitted by applicable law. Any oral or written description of the Products is for the sole purpose of identifying the Products and shall not be construed as an express warranty. Prior to using, implementing or permitting use of the Products, you shall determine the suitability of the Products for the intended use, and you shall assume all risk and liability whatsoever in connection with such determination. We reserve the right to use functionally equivalent refurbished or reconditioned parts or Products as warranty replacements or as part of warranty service. This warranty is not transferable from the original purchaser and only applies to the consumer residence where the Product was originally installed located in the United States and Canada. This warranty is not extended to resellers.

To Obtain Service Under Limited Warranty: To qualify for warranty service, you must: (a) notify us at the address or telephone number stated below within 60 days of the discovery of the defect; (b) give the model number and serial number; and (c) describe the nature of any defect in the Product or part. At the time of the request for warranty service, you must present evidence of your proof of purchase and proof of the original purchase date. If we determine that the warranty exclusions listed above apply or if you fail to provide the necessary documentation to obtain service, you will be responsible for all shipping, travel, labor and other costs related to the services. This warranty is not extended or restarted upon warranty repair or replacements.

Please check our website for any additional Product information, www.zephyronline.com.

Zephyr Ventilation Service Department, 2277 Harbor Bay Parkway, Alameda, CA 94502 1-888-880-8368

OCT17.0301