PURPOSE

Using your grill in windy conditions may disrupt the front-to-back air flow that the grill is designed for. If you notice that the temperature gauge fails to rise while grilling with all burners on high and the hood closed, then be careful. If wind keeps the heat from exiting the rear of the grill, then the control panel and knobs could become extremely hot. It is important to note that outdoor grills create more heat than interior kitchen ranges—that is why they are excellent for searing and grilling many foods.

The high-performance burners require a constant, steady supply of fresh air to mix the fuel and burn smoothly. Your AMD grill pulls air in through its front and vents hot gases out the rear hood (as shown below).

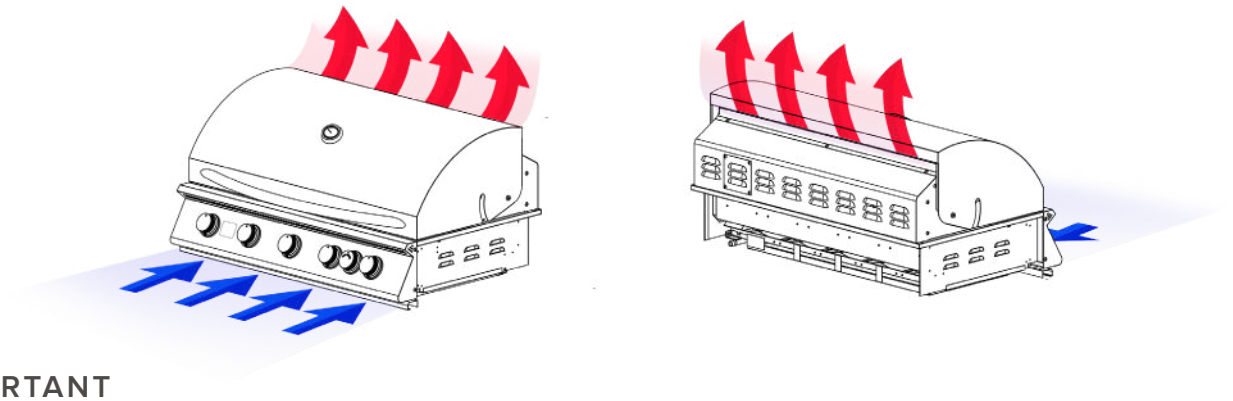

IMPORTANT

If wind is hitting the grill while in use (especially wind blowing into or across the rear hood gap), this can cause poor grilling performance and, in some cases, cause the front panel to reach dangerously high temperatures.

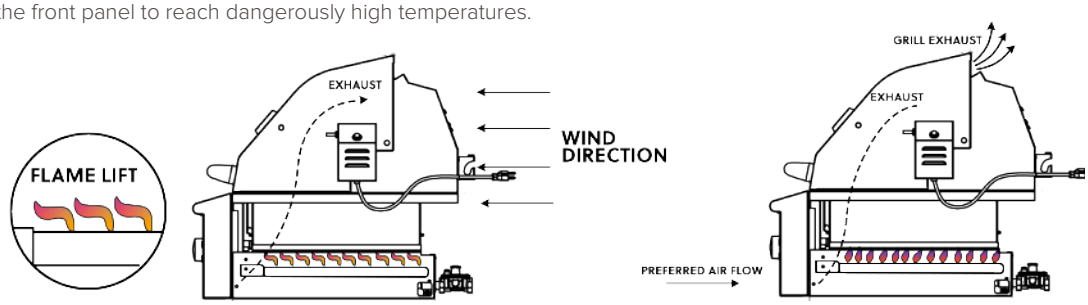

USING A WIND GUARD

If wind is an issue, a wind guard should be added behind the grill head. The wind guard should be higher than the top of the openings in the back of the grill, with a minimum grill clearance of 3” for non-combustible materials or 18” for combustible materials.

There are a few things you can do to further prevent the possibility of improper heat buildup:

- On breezy days, be careful not to leave the front hood down when the burners are on high.
- If you suspect the grill is overheating, using an oven mitt, open the front hood. Then adjust the burner control knob to a lower setting.
- Never leave your grill unattended.

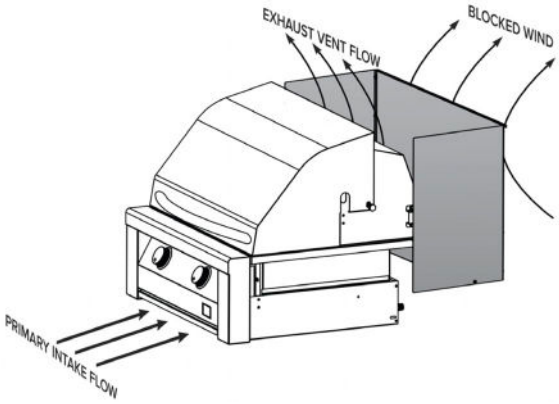

Please note: Any damage caused from use in windy conditions, such as melted knobs or igniter wires, or control panel discoloration from heat buildup, is excluded from warranty coverage.

INSTRUCTIONS

1. Carefully Peel Protective Film.
2. Place Bottom Panel **#1** Down.
3. Secure Back Panel **#2** to Bottom Panel **#1** .
4. Secure Left Panel **#3** to Bottom Panel **#1** and Back Panel **#2**. Make Sure the Bottom of the Side Panel is on the Outside of Bottom Panel **#1**.
5. Secure Right Panel **#4** to Bottom Panel **#1** and Back Panel **#2**. Make Sure the Bottom of the Side Panel is on the Outside of Bottom Panel **#1**.
6. Using Two People, Lift Your Grill and Slide Bottom Panel **#1** Under the Rear of Your Grill (**See Image. 1 on Front Page**). Set Your Grill Down on Bottom Panel **#1** to Secure the Wind Guard.

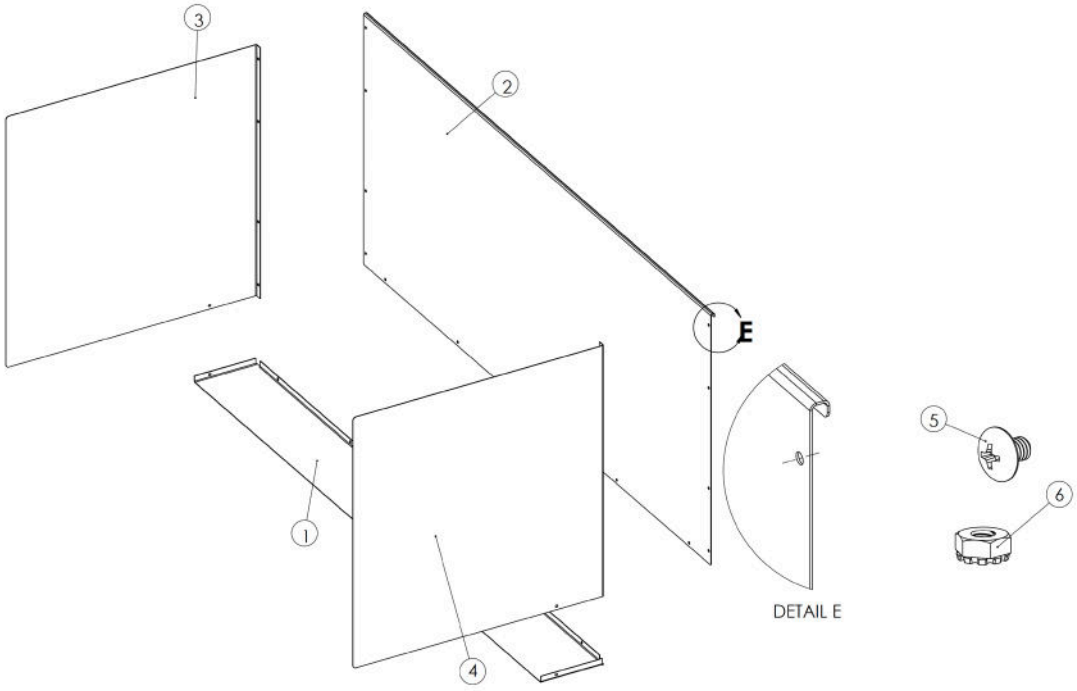

PARTS LIST

ITEM NO.	DESCRIPTION	QTY
1	BOTTOM PANEL	1
2	BACK PANEL	1
3	LEFT PANEL	1
4	RIGHT PANEL	1
5	8-32 X 1.4", PHILLIPS TRUSS HEAD MACHINE SCREW, 18-8 SST	15
6	18-SS HEX NUT WITH TOOTH WASHER	15