SUMMERSET

Griddle
User Manual

Table of Contents

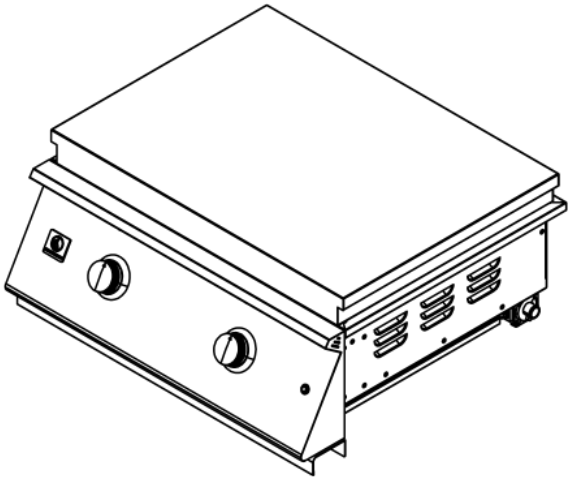

GRID30

Safety Warnings & Codes.....04

Safety & Installation Instructions.....06

Where To Install The Griddle 11

Gas Safety Requirements 13

Typical Building Dimensions.....18

Cleaning & Maintenance.....19

Operating Instructions 21

Griddle Parts List.....23

Warranty.....25

SUMMERSET GRIDDLE INSTALLATION INSTRUCTIONS & OWNERS MANUAL

NAME: SUMMERSET GRIDDLE
PART #: GRID30-LP / GRID30-NG

Liquid propane & natural gas configurations

THANK YOU

Thank you for your purchase. We'd like to welcome you to the Summerset family of luxury outdoor kitchen products and look forward to being a part your home for years to come. As a family business with over 30 years of industry experience, we aim to deliver exceptional quality and personal service. Welcome to the Summerset family and we hope you love your new Griddle!

FOR YOUR RECORDS

Please record the following information and refer to it when contacting Summerset Professional Grills or an authorized dealer. The serial number is located on the rating plate. The rating plate is located on the exterior basin of the Griddle and on the underneath side of the drip tray (select models only).

For warranty information and to register your griddle visit, amddirect.com/register
To view on your phone, scan the QR code on your smart phone's camera app. (For Android devices, use Google Lens.)

INSTALLER:

Please leave this manual for the owner

Serial Number: _____

Model: _____

Date of Purchase: _____

Place of Purchase: _____

Safety Warnings & Codes

IF YOU SMELL GAS

1. Shut off the gas to the appliance.
2. Extinguish any open flame.
3. Open lid to vent.
4. If odor continues, keep away from the appliance, and immediately call your gas supplier or fire department.

INSTALLATION

CODE AND SUPPLY REQUIREMENTS

This griddle must be installed in accordance with local codes and ordinances, or, in the absence of local codes, with either the latest National Fuel Gas Code (ANSI Z223.1/NFPA 54), and Natural Gas and Propane Storage and Handling Installation Code (CSA-B149.1).

This appliance and its individual shutoff valves must be disconnected from the gas supply piping system when testing the system at pressures in excess of ½ psig (3.5 kPa).

This appliance must be isolated from the gas supply piping system by closing its individual manual shut-off valves during any pressure testing of the gas supply system at pressures up to and including ½ psig (3.5 kPa).

⚠ WARNING!

1. Do not store or use gasoline or other flammable vapors and liquids in the vicinity of this or any other appliance.

2. A propane cylinder not connected for use shall not be stored in the vicinity of this or any other appliance with flame.

⚠ WARNING!

Improper installation, adjustment, alteration, service, or maintenance can cause injury or property damage. Refer to this manual. For assistance or additional information consult a qualified professional installer, service agency, or the gas supplier.

All electrical outlets in the vicinity of the Griddle must be properly grounded in Accordance with local codes or, in the absence of local codes, with the National Electrical Code, ANSI/NFPA 70, or the Canadian Electrical Code, CSA C22.1, whichever is applicable. Keep all electrical supply cords and fuel supply hoses away from any heated surface at all times.

Safety & Installation Instructions

⚠ WARNING!

To Reduce the risk of fire, electrical shock, or injury, read and follow these basic precautions before operating your gas Griddle.

WHEN USING YOUR GRIDDLE, PLEASE READ AND FOLLOW THESE BASIC PRECAUTIONS:

GRIDDLE INSTALLATION

This Outdoor-cooking appliance (Griddle) must be installed in accordance with all local and state codes INSPECTED by your local CITY & Fire department. If installation is planned in an area with no local codes, the gas burner must be installed in accord with the National Fuel Gas Code ANSI Z223.1 and storage and handling of liquefied petroleum gases, ANSI/NFPA 58 or CSA B149.1 natural gas and propane installation code. ALWAYS USE PROFESSIONAL BUILDERS & INSTALLERS. For Safety – have inspected by your local city, Gas Company and Fire Department before use. This is NOT an indoor appliance – for outdoor use only.

CALIFORNIA PROPOSITION 65 WARNING

The burning of gas cooking fuel generates some by-products, which are on the list of substances, which are known by the State of California to cause cancer or reproductive harm. California law requires businesses to warn customers of potential exposure to such substances. To minimize exposure to these substances, always operate the unit according to the use and care manual, ensuring you provide good ventilation when cooking.

⚠ WARNING!

Failure to read and follow the "USE AND CARE" Instructions could result in a FIRE or EXPLOSION that could cause serious bodily injury, death or property damage.

Always have your appliance vented correctly, installed by a professional and inspected by the local city building department.

NOTE!

DO NOT USE THIS APPLIANCE UNDER OVERHEAD COMBUSTIBLE SURFACES

GENERAL SAFETY REQUIREMENTS

1. The installation of this appliance must conform with local codes or, in the absence of local codes, Either the National Fuel Gas Code, ANZI Z223.1/NFPA 54, or CAN/CGAB149.1, Natural Gas Installation Code or CAN CGA-B149.2, Propane Installation Code.
2. This outdoor cooking gas appliance is not intended to be installed in or on recreational vehicles and /or boats
3. This outdoor cooking gas appliance is intended for use outdoors and shall not be used in a building, garage or any other enclosed area.
4. Minimum clearance of 16" – 18" inches from the back and sides of the Griddle to adjacent combustible construction must be maintained. This outdoor cooking gas appliance shall not be located under overhead unprotected combustible construction.
5. If the use of an external electrical source is required when installed, this outdoor cooking gas appliance must be electrically grounded in accordance with the local codes or, in the absence of local codes, with the National Electrical Code, ANSI/NFPA 70, or the Canadian Electrical Code, CSA C22.1. Keep any electrical supply cord, or the fuel supply hose away from any heated surfaces.
6. Keep your Griddle in an area clear and free from combustible materials, gasoline and other flammable vapors and liquids.
7. DO NOT obstruct the flow of combustion and ventilation air to this appliance. Keep the ventilation openings of the cylinder enclosure free and clear from debris.
8. Check all gas connections for leaks with soapy water solution and brush. Never use an open flame to test for gas leaks.
9. Check flexible hoses for cuts and wear that may affect the safety before each use.
10. Never use the Griddle in a windy area.
11. Never use the Griddle without the drip pan installed and pushed all the way to the back of the Griddle. Without the drip pan, hot liquid and debris could leak downward and could produce a fire hazard.
12. Have an ABC Fire Extinguisher readily accessible. Never attempt to extinguish a grease fire with water or other liquids.
13. Keep electrical supply cords and fuel supply hoses away from heated surfaces.
14. Do not heat unopened food containers as they may explode.
15. Never store additional or empty fuel cylinders in the Griddle cabinet or near the Griddle. Do not store cylinders indoors or on their sides. Never use dented, rusty or damaged cylinders.
16. Close supervision is necessary when this or any appliance is used near children. Keep children away from the Griddle during operation and until the Griddle has cooled off.
17. Never place your fingers inside the observation openings in the griddle at any time as injury could occur.
18. After the Griddle is installed by a professional technician be sure they show you where your gas supply shut-off valve is located. All gas lines must have a shut-off that is easily accessible. If you ever smell gas, check for leaks IMMEDIATELY. Never check for gas leaks with an open flame.

19. Never operate the Griddle in a windy area. If windy conditions exist, install a suitable wind guard.
20. Damage caused by leaving operating burner unattended is not covered under the terms and conditions of the AMD Direct Warranty. Never leave open flame unattended.
21. Never use the Griddle without drip pan in place. Make sure drip pan is properly and fully inserted. Failure to do so may allow hot grease or boil-overs to become a fire or explosion hazard.
22. Do not repair or replace any part of the Griddle unless specifically recommended by this manual. A qualified technician should perform all other necessary service.
23. The Summerset Griddle is not designed/certified for and cannot be installed in or on recreational vehicles, portable trailers, boats or any other mobile vehicle.
24. Children should never be left alone or unattended in an area where the Griddle is located. Install the Griddle well away from areas where children play. Do not store items that may draw the interest of children in or around the Griddle, island or masonry enclosure. When in use and immediately after, areas of the Griddle is hot enough to cause severe burns!
25. Avoid wearing loose-fitting, long sleeves or flammable garments when using the Griddle. Never touch cooking grates on top or surrounding metal surfaces with your bare hands as these areas become extremely hot during use and could cause severe burns. Use an insulated glove or mitt when attempting to handle parts of the Griddle.
26. Never lean over or look directly over the cooking surface when attempting to light.
27. The Griddle lid must be completely removed before lighting and during operation.
28. Do not cover the Griddle with the lid until the cooking surface has cooled down.
29. Never connect any unregulated gas supply to the Griddle. Supplied regulator must be used in order to validate warranty.

NOTE: In Massachusetts: All gas products must be installed using a "Massachusetts" licensed plumber or gas fitter. A "T" Handle type manual gas valve must be installed in the gas supply line to this appliance. This applies to permanently installed natural gas and propane installations. This does not apply to propane portable installations using a 20-pound tank.

SHIPMENT ARRIVING DAMAGED:

VISIBLE DAMAGE

If your shipment arrives with visible damage to the box/carton, be sure the damage is noted on the bill of freight or express receipt and signed by the person making the delivery. File claim for damages immediately, regardless of the extent of damage.

CONCEALED DAMAGES

If damages are unnoticed until the Griddle is unpacked, notify the transportation company or carrier immediately and file a concealed damage claim with them. This should be done within (5) days of the delivery date. Be sure to hold on to the box/carton for inspection. We cannot assume responsibility for damage or loss incurred in transit.

IMPORTANT NOTES

BE MINDFUL OF WIND DIRECTION

When selecting a suitable location, consider important factors such as exposure to the wind and foot traffic patterns. Position your Griddle so the prevailing wind blows into the front control panel (at your back when operating), allowing for proper front to rear airflow. Griddles located in areas with prevailing winds should be protected by a wind barrier, wind deflector, or wind guard. The Griddle is designed to pull in air from the front and exhaust through the rear of the unit. Winds hitting the back of the Griddle directly may cause problems.

GAS LINE LENGTH

Keep all gas supply lines as short as possible. Gas lines lose pressure over distance and with each elbow or "t" fitting added. This drop in pressure affects Griddle performance.

PROPER LEVELING

PROPER LEVELING DURING INSTALLATION IS CRITICAL. A GRIDDLE THAT IS OUT OF LEVEL WILL CAUSE ERRATIC BURNER COMBUSTION AND INEFFICIENT, UNEVEN HEATING. THE GRIDDLE SHOULD BE LEVEL IN ALL DIRECTIONS. ADJUSTMENTS MAY NEED TO BE MADE EACH TIME WHEN MOVING A FREESTANDING UNIT.

CONSTRUCTION ZONES

Keep all stainless steel products away from construction zones. Construction debris such as (but not limited to) stone dust, stucco, and lime dust could damage or permanently discolor stainless steel products. Keep all caustic chemicals including chlorine and pool cleaning products away from stainless steel at all times.

IMPORTANT: THIS GRIDDLE IS FOR OUTDOORS USE ONLY.

WARNING!

The Griddle must be installed in masonry or other type of fireproof surround. The unit is not insulated and therefore must be installed or placed with 16" – 18" of side and back clearance from unprotected combustible materials such as wood, Plastic, or stucco with wood framing. PLEASE NOTE: if this is not done the combustible material will catch on fire and potentially damage your house / structure and may cause bodily harm due to the fire.

Do not install this unit under unprotected flammable surfaces. Do not install or use this appliance inside a building, garage, or any other enclosed area. It must not be used in or on recreational vehicles or boats.

This is a slide-in unit designed to fit into open-front enclosures. Control panel of the unit is removable for gas hookup, servicing and burner adjustment. Control panel must remain removable after you install the unit. Do not have this panel sealed for any reason.

Important: The lip on the side requires 1" (2.5 cm)of counter top on each side and back to support the unit.

Note: This unit should be installed so that it can be removed at a later date if factory service is required.

ENSURING PROPER COMBUSTION AIR AND COOLING AIR FLOW

You must maintain proper air flow for your Griddle to perform as it was designed (diagram below) If airflow is blocked, overheating and poor combustion will result. Make sure not to block the 1" (2.5 cm) front air inlet along the bottom of the control panel or more than 75% of the support grid surface with pans or cooking utensils.

Note: The 1" (2.5 cm) front air space allows access to the drip tray.

EXHAUST REMOVAL

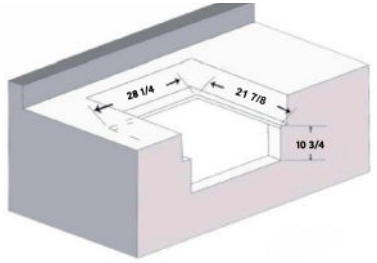

GRID30

If installed under a patio roof, the cooking grid area should be fully covered by a chimney and exhaust hood. An exhaust fan with a rating of up to 1,000 CFM (472 liters per second) may be necessary to efficiently remove smoke and other cooking by-products from the covered area. Installation in fully enclosed patio areas is not recommended.

BURNER BTU

18,000	36,000

MINIMUM PRESSURE REQUIREMENTS

Ensure the gas supplied meets the minimum pressure requirements. See below table for gas requirements measured in water column (w.c.) pressure:

Natural Gas	7" w.c.	4" w.c.

.

Both the regulator and burner orifices have been tuned for the type of gas specified on the rating plate. Converting to a different type of gas requires a conversion kit. Conversion kits are included with this Griddle and located with the manual. Converting gases may require additional parts not included with this Griddle. (See Gas Conversion section for details).

- Do not store or use gasoline or other flammable liquids or vapors near this or any other appliance.
- Do not store spare LP cylinders under or near this appliance.
- Never fill cylinder more than 80% capacity. If these instructions are not followed, fire causing serious injury or even death may occur.
- For installation in non-combustible locations only.
- Do not locate under unprotected, overhead combustible surfaces.

GAS SAFETY REQUIREMENTS

Each appliance is set and tested at the factory for the type of gas supply to be used. Identify the type of gas, either natural gas or LP (Liquid Propane) gas and make sure that the marking on the rating plate located on the side of the unit matches the gas being supplied to the Griddle. The rating plate is located on the side of the Griddle.

All gas hook up connections should be made by a qualified technician and in accordance with local codes and ordinances. The installation must conform with local codes or, in the absence of local codes, with either the latest National Fuel Gas Code (ANSIZ223.1/NFPA 54), and Natural Gas and Propane Storage and Handling Installation Code (CSA-B149.1).

Where to Install the Griddle

IMPORTANT!

THE GRIDDLE IS FOR OUTDOOR USE ONLY.

⚠ WARNING!

The Griddle must be installed in a masonry or other type of fireproof surround. The unit is not insulated and therefore must be installed or placed with 16'' – 18" of side and back clearance from unprotected combustible materials such as wood, plastic, or stucco with wood framing. PLEASE NOTE: if this is not done, the combustible material will catch on fire and potentially damage your house / structure and may cause bodily harm due to the fire. Optional insulating liners are available.

Do not install this unit under unprotected flammable surfaces. Do not install or use this appliance inside a building, garage, or any other enclosed area. It must not be used in or on recreational vehicles or boats. This is a slide in unit designed to fit into open-front enclosures. Control panel of the unit is removable for gas hookup, servicing and burner adjustment. Control panel must remain removable after you install the unit. Do not have this panel sealed for any reason.

IMPORTANT!

The lip on the side requires 1'' (2.5 cm) of counter top on each side and back to support the unit.

NOTE!

This unit should be installed so that it can be removed at a later date if factory service is required.

ENSURING PROPER COMBUSTION AIR AND COOLING AIR FLOW

You must maintain proper air flow for your Griddle to perform as it was designed (diagram below). If airflow is blocked, overheating and poor combustion will result. Make sure not to block the 1'' (2.5 cm) front air inlet along the bottom of the control panel or more than 75% of the support grid surface with pans or cooking utensils.

NOTE!

The 1'' (2.5 cm) front air space allows access to the drip tray.

EXHAUST REMOVAL

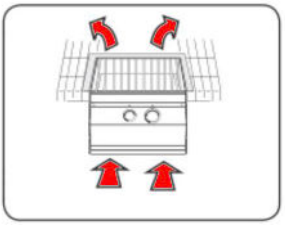

If installed under a patio roof, the cooking surface area should be fully covered by a chimney and exhaust hood. An exhaust fan with a rating of up to 1,000 CFM (472 liters per second) may be necessary to efficiently remove smoke and other cooking byproducts from the covered area. Installation in fully enclosed patio areas is not allowed.

Gas Safety Requirements



Each appliance is set and tested at the factory for the type of gas supply to be used. Identify the Type of gas, either natural gas or LP (Liquid Propane) gas and make sure that the marking on the rating plate located on the side of the unit matches the gas being supplied to the Griddle. The rating plate is located on the side of the Griddle.

All gas hook up connections should be made by a qualified technician and in accordance with local codes and ordinances. The installation must conform with local codes or, in the absence of local codes, with either the national Fuel Gas Code, ANSI Z223.1/NFPA 54, or CAN/CGAB149.1, Natural Gas Installation Code or CAN CGA-B149.2, Propane Installation Code.

⚠ WARNING!

CHECK TO ENSURE THAT THE GAS SUPPLY HOSE DOES NOT COME IN CONTACT WITH ANY HOT SURFACE OF THE GRIDDLE.

L.P. GAS (LIQUEFIED PETROLEUM/PROPANE)

If your Griddle is factory built for L.P., the regulator required is set for 10" water column and is for use with L.P. gas only. If unit is NOT supplied with regulator please make sure that all requirements are met for the type of regulator required.

L.P. GAS SAFETY REQUIREMENT

The LP-gas supply cylinder must be constructed and marked in accordance with the Specifications for LP-gas Cylinders of the U.S. Department of Transportation (D.O.T.) or the National Standards of Canada CAN/CSA-B339, Cylinders, Spheres and Tubes for the Transportation of Dangerous Goods, and Commission, as applicable; and

1. Provided with a listed overfilling prevention device.
2. Provided with a cylinder connection device compatible with the connection for outdoor cooking appliances.

It must be provided with a shut-off valve terminating in gas tank valve outlet. It must include a collar to protect the cylinder valve. The cylinder supply system must be arranged for vapor withdrawal.

Do not operate the gas Griddle indoors or in any enclosed area. If the gas Griddle is not in use, the gas must be turned off at the supply cylinder. If the Griddle is to be stored indoors, disconnect the gas supply cylinder and leave the cylinder outdoors.

LP GAS HOOK-UP

Do not use any replacement regulator other than that specified by the manufacturer. Use only pipe sealants that are approved for use with natural and LP gases. An installer-supplied gas shutoff valve must be installed in an accessible location. (Reference: leak test procedure).

ALTHOUGH AN LP GAS CYLINDER MAY BE USED, IT IS NOT RECOMMENDED DUE TO THE LARGE AMOUNT OF GAS CONSUMPTION AND MAY FREEZE UP THE GAS CYLINDER AS WELL AS A SAFETY RISK.

CONNECTING TO THE LP TANK

The hose and regulator are connected in the following manner:

- To disconnect the coupling nut, first make sure the main cylinder valve is turned off. Grasp the coupling nut and turn counterclockwise. The inlet will then disengage.
- Insert the regulator inlet into the cylinder valve and turn the black coupling nut clockwise until the coupling nut is hand tight. DO NOT over-tighten this connection.

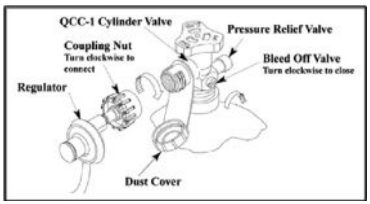

FILLING AND REFILLING LP GAS CYLINDERS

All purging and refilling of LP gas cylinders must be performed by qualified personnel in the LP gas industry. Never store a spare LP gas cylinder under or near this appliance.

Never fill the LP gas cylinder beyond 80 percent full. Failure to follow these instructions may result in explosion, personal injury or death.

ALWAYS WAIT 5 MINUTES BEFORE RE-LIGHTING A HOT BURNER!

NOTE:
Improper lighting procedures can cause the flow control to activate, resulting in reduced heat output. If this is suspected, shut off all burner controls and cylinder valve. Wait 30 seconds, then very slowly re-open cylinder valve. Wait an additional 5 seconds before turning burner control knob and attempting to light.

VENTING YOUR ENCLOSURE

An enclosure or Island for LP gas cylinder must be vented on the level of the cylinder valve and at floor level. The effectiveness of the opening(s) for purposes of ventilation shall be determined with the LP gas supply cylinder in place. This shall be accomplished by one of the following:

A. One side of the enclosure shall be fully open; or
B. For an enclosure having four sides, a top and a bottom: At least two ventilation openings at cylinder valve level shall be provided in the sidewall, equally sized, spaced at 180 degrees (3.14 rad), and unobstructed. Each opening shall have a total free area of not less than 1/2 square inch per pound (7.1 cm2/kg) of stored fuel capacity and not less than a total free area of 10 square inches (64.5 cm2).

Ventilation opening(s) shall be provided at floor level and shall have a total free area of not less than ½'' square inch per pound (7.1 cm2/kg) of stored fuel capacity and not less than a total free area of 10 square inches (64.5 cm2). If ventilation openings at floor level are in a sidewall, there shall be at least two openings. The bottom of the openings shall be at floor level and the upper edge no more than 5 inches (127 mm) above the floor. The openings shall be equally sized, spaced at 180 degrees (3.14 rad) and unobstructed.

LIQUID PROPANE INSTALLATION NOTE:

Ventilation is required in the enclosure on opposite sides to create cross-ventilation. Liquid propane is heavier than natural gas and vents should be located near the bottom of the enclosure.

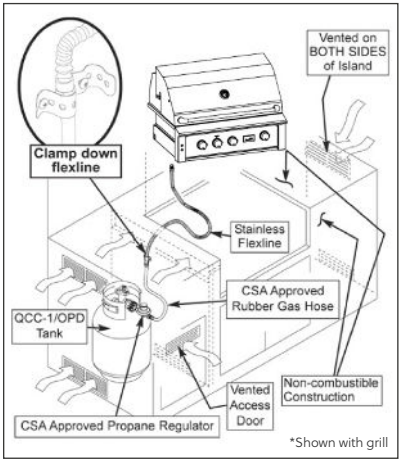

⚠ WARNING!

Before lighting the burners, inspect the gas supply piping or hose. If there is evidence of cuts, wear, or abrasion, it must be replaced prior to use. Always keep your face and body as far away from the griddle as possible when lighting.

LP gas Griddle models are designed for use with a standard 20 lb. liquid propane gas (LP) tank with type (1) valve connections. (Not included)
Never connect your gas Griddle to an LP tank that exceeds this capacity. A tank of approximately 12 inches in diameter by 18-1/2 inches high is the maximum size LP gas tank to use. A propane tank with an OPD (Overfill Prevention Device) must be used. This safety feature prevents the tank from being over-filled which can cause malfunction of the LP gas tank, regulator and/or Griddle. The LP cylinder must be constructed and marked in accordance with the specifications for LP gas cylinders of the U.S. Department of Transportation (DOT) and designed for use with a Type 1 system only. Be sure to read and follow all LP connection instructions.

A dented or rusty LP cylinder may be hazardous and should be avoided. If in doubt, have it checked by your LP supplier. Always check for leaks after every LP cylinder change. (See Checking For Leaks)

Cylinders must be stored outdoors in a well-ventilated area out of the reach of children. If your Griddle is stored in an enclosed space, the LP cylinder must be stored outside, in upright position and away from excessive heat.

IMPORTANT

All installation and all installation parts must conform to local codes with the National Electrical Code, ANSI Z223.1/ NFPA 70 latest edition and the National Fuel Gas Code ANSI Z223.1/NFPA 54 in the U.S. and CGA-B149.1/.2 in Canada

CONNECTING TO A SIDE BURNER

You will need a 'T' adapter fitting (not provided) or similar connection to connect a single gas line to both a side burner and a Griddle. We recommend a licensed gas technician install all gas lines. See below figure for installation of a 'T' adapter.

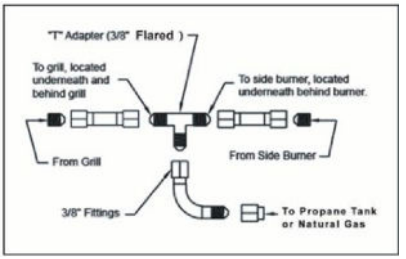

⚠ WARNING!

IF YOU SMELL GAS:

1. SHUT OFF GAS TO THE APPLIANCE RIGHT AWAY
2. EXTINGUISH ANY OPEN FLAME
3. MAKE SURE THE COVER IS NOT PLACED OVER THE BURNER
4. IF GAS SMELL CONTINUES, KEEP AWAY FROM THE APPLIANCE AND IMMEDIATELY CALL YOUR GAS SUPPLIER OR FIRE DEPARTMENT.

NATURAL GAS INSTALLATION

The installation must conform with local codes or, in the absence of local codes, with either The national Fuel Gas Code, ANSI Z223.1/NFPA 54, or CAN/CGA-B149.1, Natural Gas Installation Code or CAN/CGA-B149.2, Propane Installation Code.

1. This gas appliance and its individual shutoff valve must be disconnected from the gas supply piping system during any pressure testing of that system at the test pressures in excess of 1/2 psi (3.5 kPa).
2. This appliance must be isolated from the gas supply piping system by closing its individual manual shutoff valve during any pressure testing of the gas supply piping system at test pressures equal to or less than 1/2 psi (3.5 kPa).

If the gas Griddle is factory built for natural gas, the regulator (If included) needs to be set for 4" water column. The regulator is convertible later to 10" water column for system LP application. Do not use with a 20-lb LP cylinder unless the Griddle is converted. Make sure that the regulator is set for natural gas. To check, remove the top cap. You will find the conversion plastic pin attached to the cap on the underside of the cap. If the disc (1/2 in. diameter) of the pin is close to the cap, then the regulator is set for natural gas. If the disc is at the tip of the pin, away from the brass cap, the regulator is set for system LP application. To convert to natural gas, remove the plastic conversion pin and invert and replace it back in a manner such that the disc is close to the brass cap. For both natural and LP, the maximum inlet pressure is 14" water column.

Do not use any replacement regulator other than that specified by RCS. Use only pipe sealants that are approved for use with natural and LP gases. An installer-supplied gas Shutoff valve must be installed in an accessible location.

LEAK TEST

CAUTION BEFORE TESTING

NEVER USE THE GRIDDLE WITHOUT FIRST LEAK TESTING THE GAS CONNECTIONS.

WARNING: DO NOT USE OPEN FLAME TO CHECK FOR LEAKS. USE OF AN OPEN FLAME COULD RESULT IN A FIRE, EXPLOSION AND BODILY HARM. DO NOT SMOKE WHILE PERFORMING THE LEAK TEST!

IF AT ANYTIME YOU SMELL GAS – SWITCH OFF ALL OF YOUR EQUIPMENT AND CALL A PROFESSIONAL TO DETECT THE GAS LEAK. ALWAYS INFORM ALL MEMBERS OF YOUR FAMILY ABOUT THIS IMPORTANT FACT – SMELL GAS = DO NOT USE THE EQUIPMENT.

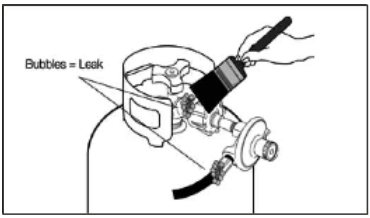

To prevent fire or explosion hazard, DO NOT use or permit sources of ignition in the area while performing a leak test. Perform leak test outdoors only. Check to ensure that flexible hoses do not have any cuts and wear that may affect the safety before each use. Use only replacement regulator specified by the manufacturer.

1. Prepare a leak testing solution of soap and water in a spray bottle (50% solution)
2. Confirm that all control knobs are in the off position
3. Turn the main gas supply valve ON
4. Apply the leak test solution by spraying on all of the pipe joints, fittings and hose
5. A gas leak is detected when:
   a. There is a faint smell of gas and/or
   b. There are bubbles around the connections

6. DO NOT ATTEMPT TO IGNITE THE BURNER
7. Turn off the main Gas Supply
8. Call a certified/qualified professional to repair the GAS LEAK
9. DO NOT attempt to use the Griddle until the leak is fixed

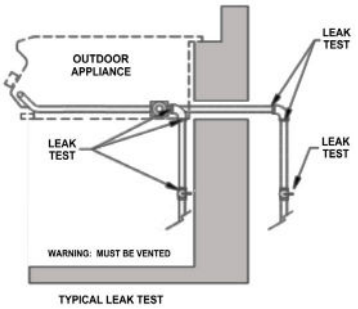

TYPICAL LEAK TEST

NOTE!

Its is recommended to build the Griddle at least 6"-12" lower than the counter top

TYPICAL BUILDING DIMENSIONS

CLEARANCE TO COMBUSTIBLE CONSTRUCTION:

A minimum clearance of 18" from the sides and back of the Griddle to adjacent Vertical combustible construction must be maintained.

CLEARANCE TO NONCOMBUSTIBLE CONSTRUCTION:

A minimum clearance of 1" from the back of the Griddle above cooking surface to non- combustible construction is required.

A minimum of 1" clearance to the sides of the Griddle above cooking surface to noncombustible construction is recommended.

NOTE!

DO NOT USE THIS APPLIANCE UNDER OVERHEAD COMBUSTIBLE SURFACES

LINE DRAWINGS FOR GRID30

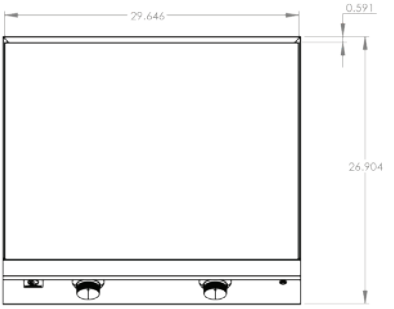

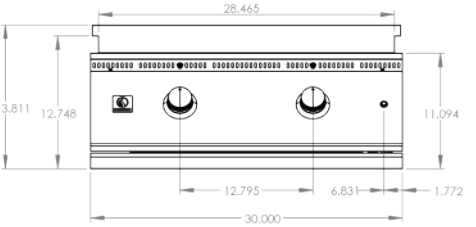

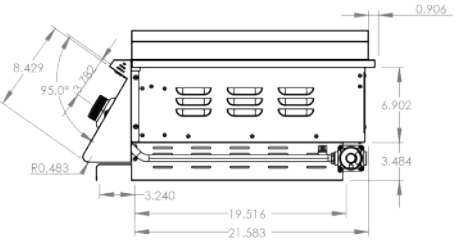

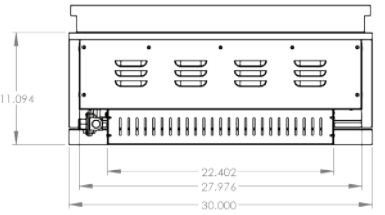

Cleaning & Maintenance

SPIDER AND INSECT WARNING

Spiders and other insects can nest in the burner of this and any other Griddle, which causes the gas to flow from the front of the burner. This dangerous "condition" can cause a fire behind the valve panel, damaging the Griddle and making the Griddle unsafe to operate. Inspect the burners once a year or if the Griddle has not been used for more than one month or if any of the following conditions occur:

1. The smell of gas in conjunction with the burner flames appearing yellow.
2. The Griddle does not reach temperature.
3. The Griddle heats unevenly.
4. The Griddle makes popping noises.

STAINLESS STEEL MAINTENANCE

The Griddle is made of stainless steel construction. Never clean the stainless steel when it is hot. After the initial cooking use, certain areas of the Griddle may discolor. This is a normal discoloration caused by the internal heat given off by the burner. Specks of grease can gather on the surface of the stainless steel and get baked-on. These can be removed by using a mild abrasive pad (like Scotch Brite) with a stainless steel cleaner. Use the mildest cleaner and always scrub in the direction of the grain.

Do not use steel wool to clean the Griddle.

Do not use abrasives on the polished highlights.

Be extra careful when cleaning around the highlights. Metal polisher or mild chrome cleaner can be used to bring back the luster on highlights. To touch-up minor scratches in the stainless steel, sand the affected surface very lightly, with 100-dry grit emery sandpaper in the direction of the grain.

GRIDDLE COOKING SURFACE MAINTENANCE

The easiest way to clean the cooking surface is to scrub it with a barbecue brush immediately after cooking is completed and the flame is turned off.

Wear a heat protective barbecue mitt to protect your hands from the heat and steam. Dip a brass bristle barbecue brush in tap water and scrub the hot cooking surface. Dip the brush frequently in tap water. Steam, created as water comes in contact with the hot Griddle, helps loosen food particles stuck in the Griddle. Cleaning of the Griddle would be longer and more difficult if the Griddle cooking surface is allowed to cool before cleaning.

BURNERS CLEANING & MAINTENANCE

Burners are made of heavy gauge stainless steel and can be cleaned using a bristle brush, warm water and soap. Check every port hole for clogs. Use a wire pin to clean out clogged ports. Make sure the burner is dry before installing it back to the Griddle.

DRIP PAN

The drip pan collects grease, liquid and fallen food particles. Allow the pan and its contents to cool before cleaning. Slide the pan out and wipe it clean. Make sure the drip pan is fully inserted back into the Griddle. It is highly recommended to clean the pan after every use to avoid any possibility of a grease fire. DO NOT use the Griddle without the drip pan pushed all the way to the back of the Griddle unit.

Operating Instructions

BEFORE LIGHTING THE GRIDDLE

1. DO NOT ATTEMPT TO LIGHT THE GRIDDLE IF YOU SMELL GAS.
2. **WARNING!**
   IT IS CRITICAL THAT THE GAS BURNERS ARE PROPERLY INSTALLED WITH THEIR ORIFICES INSIDE THE BURNERS AIR SHUTTERS.
   If not properly installed, gas may leak outside of the burner that could lead to fire, potential damage to your Griddle and bodily injury.

Inspect the gas supply piping or hose prior to turning the gas ON. If there is evidence of cuts, wear, or abrasion, it must be replaced prior to use. The replacement pressure regulator and hose assembly must be the type specified by the manufacturer. Do not use the Griddle if the odor of gas is present.

If the unit is LP, screw the regulator and hand tighten to the valve of the cylinder and leak check the hose and regulator connections with a soap and water solution before operating the Griddle. Make sure you always read about LEAK PREVENTION.

Always keep your face and body as far away as possible when lighting.

Refer to spiders and insects warning and procedure under the cleaning and maintenance page of this manual.

LIGHTING THE GRIDDLE

1. Open the gas supply shut-off valve.
2. Push in the knob to the left wait a few seconds and then click the sure-strike ignition system to ignite. If the igniter does not light turn to the right and OFF position, verify that the gas is on and then try again.
3. Once you see or hear a flame you can adjust the burner to the desired position.

CAUTION: If ignition does not take place within a few clicks, turn knob to the OFF Position, wait for two minutes and repeat step 2.

MATCH/BBQ LIGHTER LIGHTING INSTRUCTIONS:

1. Push and turn the knob counter-clock-wise past the "CLICK" position. Hold the knob pushed in for 2-3 seconds.
2. Insert a lit match or BBQ lighter through the Griddle burner access opening and near the top of the burner. Once you see or hear a flame you may release the knob.

NOTE!

If the burner does not ignite for the first time use – there may be "AIR" in the line. Contact your gas professional to bleed out the line.

IMPORTANT: If burner fails to light within 5 seconds, turn off gas and wait 2 minutes before repeating the process.

⚠ WARNING!

- If you smell gas with the valves off, shut off the gas supply and immediately checks for leaks using the soapy water technique.

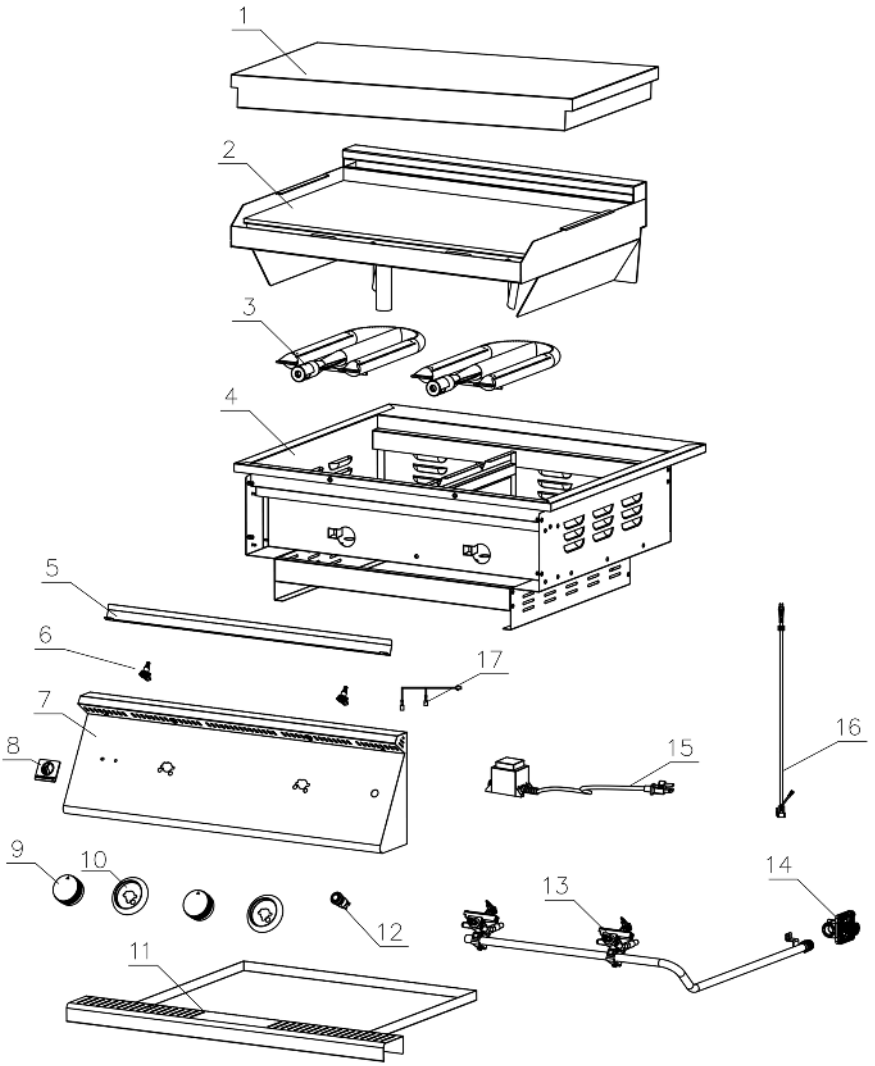

Griddle Parts List

GRID30

Item	Description	Qty
1	Lid	1
2	Griddle Plate Welding	1
3	Burner Assembly	2
4	Firebox Welding	1
5	LED Heat Sheild	1
6	LED	2
7	Control Panel Welding	1
8	Logo Plate	1
9	Knob	2
10	Knob Bezel	2
11	Drip Tray Assembly	1
12	LED Switch	1
13	Main Valve Assembly	1
14	Regulator	1
15	Transformer Assembly	1
16	Wiring Harness	1
17	LED Wire	1

Warranty

AMD Direct

GOLD STANDARD WARRANTY

Your investment in AMD Direct products is backed by the strongest warranty in the industry. In addition to precision engineering and outstanding performance, AMD Direct products include our GOLD STANDARD LIFETIME WARRANTY with all replacement parts 100% non-prorated. Effective with purchases as of 8/1/21.

AMD Direct Warranty is valid for original purchaser at original site of delivery with proof of purchase and photo documentation only. Registration form must be submitted online within 30 days of the purchase date to validate the warranty. Warranty is void upon transfer of ownership. Warranty does not apply to products installed in any commercial, rental, or nonresidential application (exception of the Resort Grill, Alturi, & TRL). Warranty covers replacement parts only. Manufacturer is not responsible for labor or labor-related costs. Warranty does not cover discoloration, surface rust, corrosion, or oxidation, which may occur due to harsh environments, chemicals, or overheating. Warranty will not apply for damage resulting from improper installations, abuse, extreme environments, grease fires, or misuse. Proof of regular and proper maintenance is required. Coastal, humid, and/or salt environments are subject to manufacturer review. All out-of-box claims must be made within 30 days of purchase and must be made prior to installation. Any product installed damaged will be considered damaged during installation and not covered under warranty. Warranty and registration forms are available at **www.amddirect.com/register**. Please be advised - all display models are sold "as is" and the warranty covers the following items only: main burners (Gold Standard Lifetime Warranty), grates (Gold Standard Lifetime Warranty), burner covers (Gold Standard Lifetime Warranty). All warranties are subject to the review and approval of the manufacturer.

14520 DELTA LANE SUITE 105,
HUNTINGTON BEACH, CA 92647

800.966.8126

AMDDIRECT.COM

AMD DIRECT GAS APPLIANCES (GRILLS, SIDE/POWER BURNERS, GAS GRIDDLE & OVEN)

- Gold Standard Lifetime Warranty on construction and manufacturer defects
- Gold Standard Lifetime Warranty on Stainless Steel Construction
- Gold Standard Lifetime Warranty on Cooking Grates, Burners, Burner Covers, Valves, Flame Tamers, and Heatzone Separators, Temperature Gauges, & Hood Springs
- Gold Standard Lifetime Warranty on Briquette Systems
- 3 YEAR Warranty on all other Parts, Components, & Electrical, including: LED Bulbs, Wire Harness, & Switches; Power Source Wire; Transformer; Interior Halogen Light Wire & Bulb

VENT HOODS, REFRIGERATION, COLD STORAGE & SINKS

VENT HOODS
- 5 Year Warranty on all Stainless Steel Construction
- 3 Year Warranty on Blowers, LED Lighting, Wiring Harness and Switches

15" & 24" REFRIGERATION MODELS
- 3 Year Warranty on all construction including Compressors
- 1 Year Warranty on Transformer, LED Bulbs, LED Harness, Power Source Wire, LED Switches, Interior Halogen Light Wire/Bulbs

21" REFRIGERATION MODELS
- 1 Year Warranty on all Construction & Electrical components including Compressor, Transformer, LED Bulbs, LED Harness, Power Source Wire, LED Switches, Interior Halogen Light Wire/Bulbs

COLD STORAGE & SINKS
- Gold Standard Lifetime Warranty on Ice Chest
- Gold Standard Lifetime Warranty on Drains & Faucets

DRAWERS, DOORS, GRILL LINERS, & CARTS

- Gold Standard Lifetime Warranty on Construction, Workmanship and Materials for all Stainless Steel parts, Including Doors, Drawers, Grill Liners, & Carts
- 3 Year Warranty on Electrical (Warming Drawers)

COVERS

- Gold Standard Lifetime Warranty on Covers, Including Grills, Carts, Side/Power Burners, Gas Griddle & Oven

COMMERCIAL APPLICATIONS

GAS GRILLS
- Gold Standard Lifetime Warranty on Workmanship, Construction, & manufacturer defects for all commercial and/or hospitality applications
- Warranty is void upon misuse, including lack of regular cleaning, vandalism, or theft
- Warranty is valid only if regular maintenance is exercised. Due to the nature of commercial applications (multiple users, lack of control of use, etc.) regular maintenance is mandatory



SUMMERSET

14520 Delta Ln
Suite 105
Huntington Beach, CA 92647

(800) 966-8126

AMDDIRECT.COM

VER. 031523