

SUMMERSET

AMG MANUAL

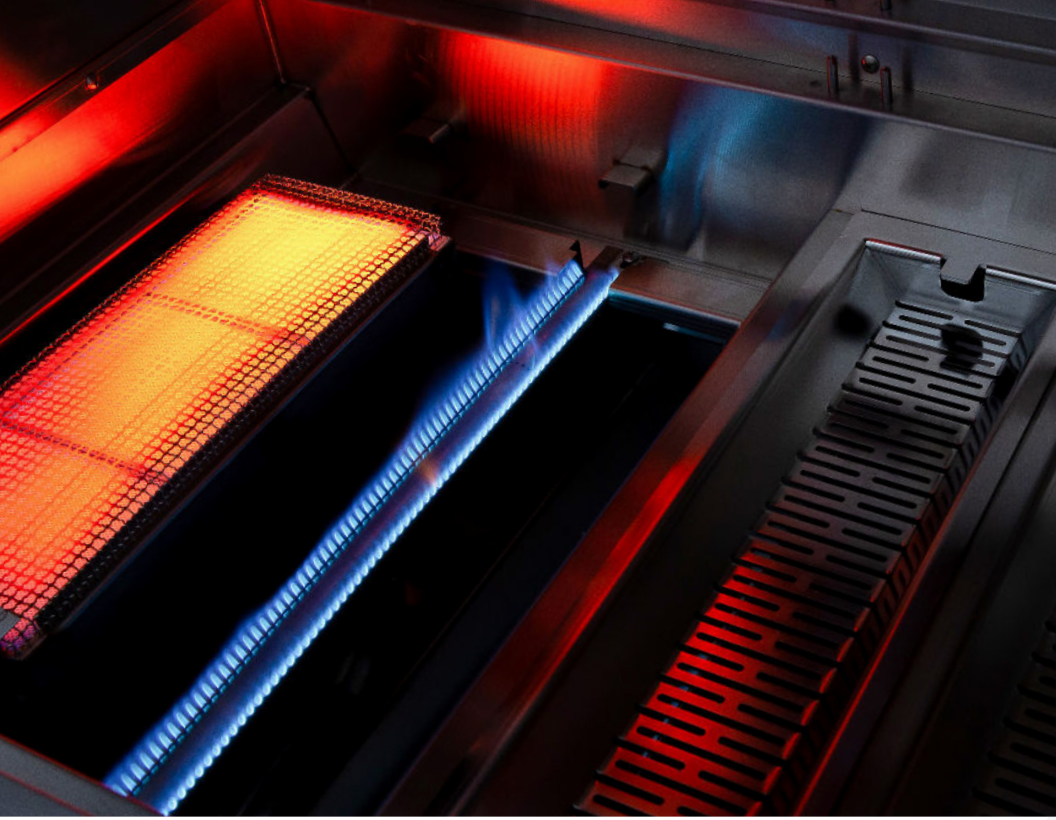


AMG



AMG INSTALLATION INSTRUCTIONS & OWNERS'S MANUAL

NAME: AMG 36" AMG 54"
PART #: AMG36 AMG54

Natural gas & liquid propane configurations

THANK YOU

Thank you for your purchase. We'd like to welcome you to the Summerset family of luxury outdoor kitchen products and look forward to being a part your home for years to come. As a family business with over 30 years of industry experience, we aim to deliver exceptional quality and personal service. Welcome to the Summerset family and we hope you love your new grill!

FOR YOUR RECORDS

Please record the following information and refer to it when contacting Summerset Professional Grills or an authorized dealer. The serial number is located on the rating plate. The rating plate is located on the exterior basin of the grill (fire box) and on the underneath side of the drip tray (select models only).

For warranty information and to register your grill visit, Summersetgrills.com/register/amg
To view on your phone, scan the QR code on your smart phone's camera app. (For Android devices, use Google Lens.)

INSTALLER:

Please leave this manual for the owner

Serial Number: _____

Model: _____

Date of Purchase: _____

Place of Purchase: _____

WARNING!

READ THIS MANUAL CAREFULLY AND COMPLETELY BEFORE USING YOUR GRILL TO REDUCE THE RISK OF:

Fire, Burn hazard, personal injury or property damage. Improper installation or servicing Electric Shock

WARNING!

THIS PRODUCT IS DESIGNED FOR OUTDOOR USE ONLY

Improper installation, adjustment, alteration, service or maintenance can cause property damage, injury or death. Read this manual thoroughly before installation, use, or servicing of this product.

WARNING!

CODE AND SUPPLY REQUIREMENTS:

This grill must be installed in accordance with local codes and ordinances, or, in the absence of local codes, with the latest National Fuel Gas Code (ANSI Z223.1/NFPA 54), or Natural Gas and Propane Storage and Handling Installation Code (CSA-B149.1)

DANGER!

IF YOU SMELL GAS:

Improper installation, adjustment, alteration, service or maintenance can cause property damage, injury or death. Read this manual thoroughly before installation, use, or servicing of this product.

DANGER!

IF YOU SMELL GAS:

Shut off all gas supply lines to the grill
Extinguish any open flames
Carefully open the lid. Remember, it may be extremely hot!
If odor continues, keep everyone away from the grill and immediately call your gas supplier or your fire department

WARNING!

CALIFORNIA PROPOSITION 65

This product can expose you to chemicals including Chromium which is known to the State of California to cause cancer and birth defects or other reproductive harm.
California law requires businesses to warn customers of potential exposure to such substances. To minimize exposure to the substances, always operate this unit according to the use and care instructions found in this manual. Be certain to provide adequate ventilation when cooking.

WARNING!

EXPLOSION HAZARD:

DO NOT use the grill as a storage area for flammable materials. Keep area clear and free from combustible materials, gasoline, and other flammable vapors and liquids. Failure to do so can result in death, explosion, or fire
An LP cylinder not connect for use shall not be stored in the vicinity of this or any other appliance

WARNING!

- The outdoor cooking gas appliance and its dedicated shutoff valve must be disconnected from the gas supply piping system during pressure testing of that system at test pressures in excess of .5 psi (3.5kPa).
- The outdoor cooking gas appliance must be isolated from the gas supply piping system by closing its dedicated manual shutoff valve during any pressure testing of the gas supply piping system at test pressures equal to or less than .5 psi (3.5kPa).

WARNING!

STATE OF MASSACHUSETTS

- Massachusetts requires all gas be installed using a plumber or gas fitter carrying the appropriate Massachusetts license.
- All permanently-installed natural gas or propane installations require a "T" handle type manual gas valve be installed in the gas supply line to this appliance.
- This does not apply to portable propane installations using a 20 pound cylinder.

WARNING!

SAFETY AND INSTALLATION WARNINGS

- Please read all instructions before installation or operating your gas grill to prevent injury and appliance damage
- All gas grills will get hot during use. Use extreme caution when operating the grill
- Do not touch hot surfaces. Always use the handle to open or close the grill
- Never use dented, rusty or damaged propane cylinders. Never store additional or empty propane cylinders in the grill cabinet or in the vicinity of this or any other appliance
- Close supervision is necessary when this or any appliance is used near children. Keep children away from the grill during operation and until the grill has cooled off
- Children should never be left alone or unattended in an area where a grill is located. Place your grill well away from areas where children play. Do not store items that may interest children in or around the grill, in the cart, or in the masonry enclosure
- Never move the grill when hot. When in use, portions of the grill are hot enough to cause severe burns.
- Always maintain the required clearances from combustibles as detailed. The grill is designed for outdoor use only. Never use in a garage, building, shed, breezeway, or other enclosed area. Do not use this grill under any unprotected overhead combustible construction
- Gas grills are not designed or certified for and are not to be installed in or on recreational vehicles, portable trailers, boats or any other moving installation
- Always have an ABC Fire Extinguisher accessible — never attempt to extinguish a grease fire with water or other liquids.
- Storing your grill: Store your grill in a well-ventilated area. If stored indoors, detach and leave L.P. cylinder outdoors in a well-ventilated area away from heat and away from where children may tamper with it
- Keep any electrical supply cord and the fuel supply hose away from any heated surfaces. Electrical cords should be placed away from walkways to avoid tripping hazard
- Do not repair or replace any part of the grill unless specifically recommended in this manual. Other service should be performed by a qualified technician
- If the grill is installed by a professional installer or technician, be sure that he/she shows you where your gas supply shut-off is located. All gas lines must have a shut-off that is readily and easily accessible. If you smell gas, check for gas leaks immediately. Check only with a soap and water solution. Never check for gas leaks with an open flame.
- Do not twist the gas supply hose
- Inspect the L.P. gas supply hose prior to each use of the grill. If there is evidence of excessive abrasion or wear, or the hose is cut, it must be replaced before using the grill
- The use of accessories, regulators, or components not recommend by the appliance manufacturer may cause injuries and will void warranty
- Never light the grill with the hood closed and be certain the burners are positioned and seated over the gas valves and on the burner support
- Never lean over the cooking surface when lighting or operating the grill
- Use barbecue tools with wood handles and insulated oven mitts when operating the grill
- Be sure the gas supplied to the grill conforms to the model you purchased. A natural gas grill requires natural gas to operate; a liquid propane grill requires liquid propane to operate
- Never connect the appliance to an unregulated gas supply line. Grills operated without a regulator are unsafe and will not be serviced until installed properly and safely. Unsafe operation without a gas regulator will void the warranty
- Grills operating with natural gas must be installed with the NG regulator supplied with the unit and set to 4.0" of water column pressure
- Grills operating with liquid propane must be installed with an LP regulator and set to 11" of water column pressure

REPLACEABLE PARTS LIST - AMG36

1.	Main Hood	HOOD-AMG36	18.	Hood Lift Assist Spring (2 ea.)	10035
2.	Temperature Gauge	TEMP-AMG	19.	Cooking Lights (2 ea.)	LIGHT BULB AMG
3.	Hood Handle	HOODHAND-AMG36-ROD	20.	Left Rotisserie Rod Bracket	AMG-RTSBKT-L
4.	Hood Handle Stanchions (2 ea.)	HOOD BKT-AMG	21.	Right Rotisserie Rod Bracket	AMG-RTSBKT-R
5.	Top Front Panel Vent	FRONT-AMG36-VNT-T	22.	Warming Rack	WARM-AMG36
6.	Bottom Front Panel Vent	FRONT-AMG36-VNT-B	23.	Cooking Grate (2 ea.)	GRATE-AMG
7.	AMG Logo Badge	10105	24.	End Fuel Tray (2 ea.)	FTR-AMG-SM
8.	Grill Front Panel	FRONT-AMG36	25.	Center Fuel Tray (4 ea.)	FTR-AMG-LG
9.	"Mutli Fuel" Badge	10132	26.	Burner Cover (5 ea.)	AMG-BRNCOV
10	LED Lights (5 ea.)	LED-AMG	27.	Burner (5 ea.)	AMG-TUBE
11.	Cooking Light Switch	SWTCH-AMG	28.	Grill Basin	BASIN-AMG36
12.	LED Light Switch	SWTCH-AMG	29.	Gas Valve (5 ea.)	MV-AMG-(GAS TYPE)
13.	Knob Bezel (5 ea.)	KNOB BZL AMG	30.	Gas Manifold	10106
14.	Control Knob (5 ea.)	KNOB-AMG	31.	Gas Regulator	REG-AMG-(GAS TYPE)
15.	Drip Tray	DRIP-AMG36	32.	Electrical Transformer	10220
16.	Hood Stop/ Rod Holder (2 ea.)	HOLDERBRAK-AMG	N/A	Natural Gas Valve Orifice	MVO-AMG-N
17.	Rear Hood	REAR HOOD-AMG36	N/A	Propane Gas Valve Orifice	MVO-AMG-P

REPLACEABLE PARTS LIST - AMG54

1.	Main Hood	HOOD-AMG54	18.	Hood Lift Assist Spring (2 ea.)	10035
2.	Temperature Gauge	TEMP-AMG	19.	Cooking Lights (3 ea.)	LIGHT BULB AMG
3.	Hood Handle	10047	20.	Left Rotisserie Rod Bracket	AMG-RTSBKT-L
4.	Hood Handle Stanchions (2 ea.)	HOOD BKT-AMG	21.	Right Rotisserie Rod Bracket	AMG-RTSBKT-R
5.	Top Front Panel Vent	10146	22.	Warming Rack	WARM-AMG54
6.	Bottom Front Panel Vent	10145	23.	Cooking Grate (3 ea.)	GRATE-AMG
7.	AMG Logo Badge	10105	24.	End Fuel Tray (2 ea.)	FTR-AMG-SM
8.	Grill Front Panel	FRONT-AMG54	25.	Center Fuel Tray (7 ea.)	FTR-AMG-LG
9.	"Mutli Fuel" Badge	10132	26.	Burner Cover (8 ea.)	AMG-BRNCOV
10	LED Lights (8 ea.)	LED-AMG	27.	Burner (8 ea.)	AMG-TUBE
11.	Cooking Light Switch	SWTCH-AMG	28.	Grill Basin	BASIN-AMG54
12.	LED Light Switch	SWTCH-AMG	29.	Gas Valve (8 ea.)	MV-AMG-(GAS TYPE)
13.	Knob Bezel (8 ea.)	KNOB BZL AMG	30.	Gas Manifold	10315
14.	Control Knob (8 ea.)	KNOB-AMG	31.	Gas Regulator	REG-AMG-(GAS TYPE)
15.	Drip Tray	DRIP-AMG54	32.	Electrical Transformer	10220
16.	Hood Stop/ Rod Holder (2 ea.)	HOLDERBRAK-AMG	N/A	Natural Gas Valve Orifice	MVO-AMG-N
17.	Rear Hood	REAR HOOD-AMG54	N/A	Propane Gas Valve Orifice	MVO-AMG-P

ILLUSTRATED PARTS: AMG 36

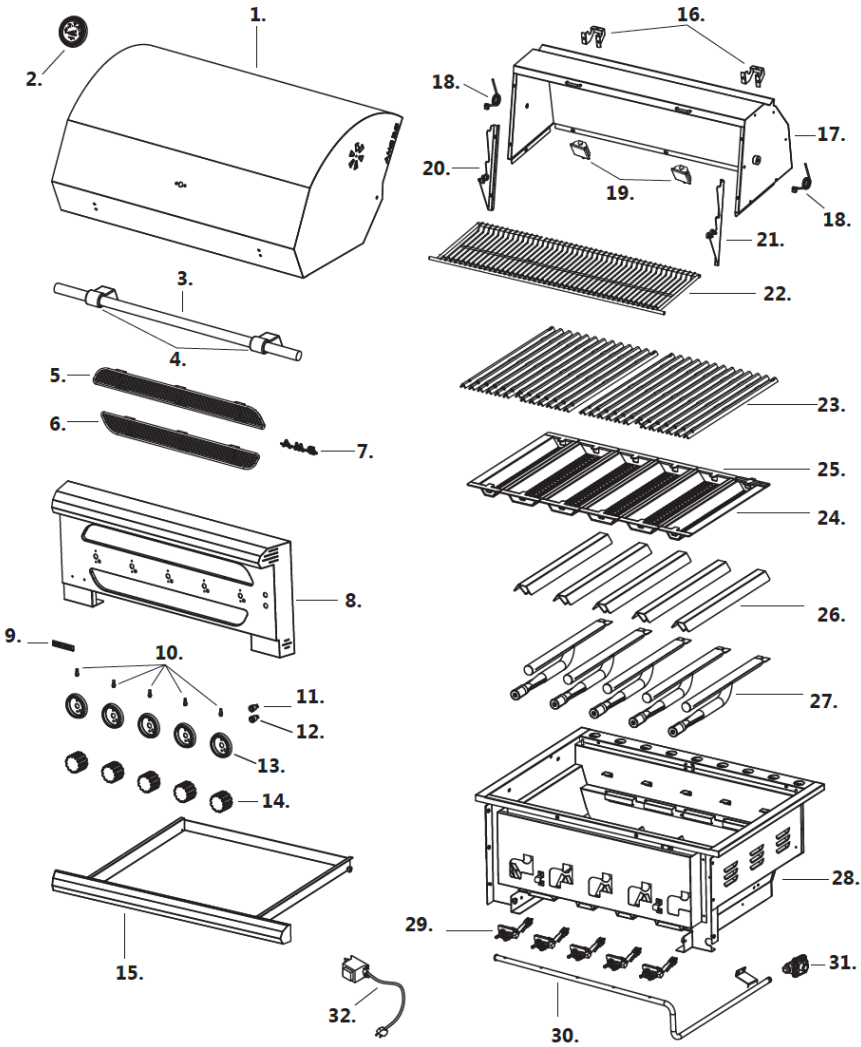

SHIPMENT ARRIVING DAMAGED:

VISIBLE DAMAGE

Your AMG grill has been carefully designed for easy placement and operation on your outdoor room, patio or deck.
Before installation, it is important to carefully select, plan, and prepare the location of your new grill. When selecting a location, consider important factors such as gas line access, exposure to wind and foot-traffic, and areas where people congregate. Avoid locating the grill in areas where it may be accidentally touched or bumped. Most importantly, this is an outdoor appliance. Ensure your barbecue is positioned safely away from anything that can catch fire. Under no circumstance is this grill to be used indoors. This includes garages or any other enclosed area.

⚠ WARNING!

- Never locate the grill under a roof or overhang, in a building, garage, shed or other such enclosed area.
- Never locate the grill under combustible construction.
- Never locate the grill where the gas hose could create a safety hazard, or be exposed to damage.
- Gas grills are not designed or certified for and are not to be installed in or on recreational vehicles, portable trailers, boats or any other moving installation.
- Children should never be left unattended in an area where a grill is located. Place your grill well away from areas where children play. Do not store items that may interest children in or around the grill, in the cart, or in the masonry enclosure.

NOTE! PARTIAL ENCLOSURES:
Many backyards have areas that are partially enclosed such as balconies and pergolas. In some cases, it is hard to determine whether these areas should be classifieds indoor areas, particularly in terms of permanent (non-closable) ventilation. If you are uncertain how to categorize a partial enclosure, contact the authority having jurisdiction for help describing the space.

PREVAILING WIND

The American Muscle Grill design includes a wind deflecting spoiler at the rear of the grill, however winds blowing directly in the back of the grill can still affect burner performance and proper air flow which may cause overheating. If you have a freestanding grill, position it so the prevailing wind blows toward the front control panel (at your back when grilling) for the proper front-to-rear airflow. Built-in grills located in areas with prevailing winds should be protected by a wind barrier.

CLEARANCES TO COMBUSTIBLES

IMPORTANT!

- Never install this product in a combustible enclosure without an accessory grill liner. Doing so could result in fire, property damage, and personal injury.
- Maintain at least 15 inches of clearance between the sides and back of the grill and any combustible surface or material.
- Maintain at least 6 inches of clearance between the sides and back of the grill and any non-combustible surface or material.
- Do not locate the grill under any overhead combustible construction

PROPER VENTILATION

Ensure there is adequate fresh air ventilation for both the barbecue and cylinder if your grill operates on LP gas. This is required not only for proper combustion, but also to prevent gas buildup and a possible explosion.

KEEP IT LEVEL

Use your barbecue only on a firm level surface. Proper leveling during installation is critical both front-to-back and side-to side. A grill that is out of level will experience erratic burner combustion and inefficient, uneven heating.

PROTECTION FROM WEATHER

Keep the barbecue protected from adverse weather, including rain and high winds. A Polyvinyl cover is included that has been custom designed for your AMG grill. Always keep your grill covered when not in use.

WARNING!

If your grill includes the optional rotisserie kit and you store the rotisserie rod at the back of the grill, always remove the rear of the cover first, carefully avoiding the rotisserie rod so it doesn't fall from the grill. The rotisserie rod is very heavy and sharp and can cause severe personal injury.

EASY ACCESS

Allow clear access to the gas supply hose and regulator. When your grill is installed, you should be able to access the gas supply line, including the gas piping or hose, gas regulator, gas cylinder and any shut off valves. Keep all gas supply lines as short as possible because gas lines lose pressure over distance and with each elbow and tee.

BUILT-IN INSTALLATIONS

The AMG is designed for easy installation into built-in masonry enclosures constructed of non-combustible materials, or in a built-in enclosure constructed of combustible material when installed with a grill liner.

Before installing a grill in any island or cut out, make sure that the opening is not bigger than the outside frame of the grill unit. The grill should rest on the entire lip of the frame.

Be sure the planned location's prevailing wind doesn't blow toward the hood gap at the back of the grill. This can cause poor grill performance as well as overheating. Pay careful attention to the location of the gas line. It should be routed away from sources of heat and should make as few bends as possible.

Check to see if the gas line connection will be accessible when grill is installed. If the gas line connection is not easily accessible when the grill is installed, support the grill above counter level and attach the gas line to the grill. When the gas connection is made and has been checked for leaks, slide the grill into the cutout. If the gas line connection is accessible when the grill is installed, slide the grill into the cutout and then attach the gas line.

Be very careful not to kink the gas line when lowering the grill into the cutout.

Keep your fingers away from where the grill will be supported on counter. Your fingers could become trapped and serious injury could occur.

Check to make sure the grill is level and is supported around the entire outside edge. If the grill is not level or is unstable, use non-combustible shims under the outside lip to stabilize it. You will need a second person to help you avoid damaging the grill or your barbecue island. You may want to use cardboard strips under the outside edges of the grill to protect the finish of the island.

The deck ledges and counter should be flat and level. (refer to ANSI Z21.58 Standard for Outdoor Cooking Gas Appliances, Section 1.7 Enclosures For Self Contained LP-Gas Supply Systems)

This grill requires that a 120 volt, 60 hertz, 15 amp GFI certified outlet be installed by a qualified electrician.

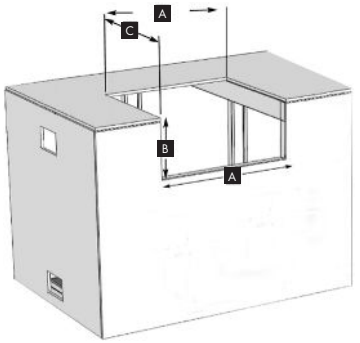

CUT OUT DIMENSIONS

Grill Model	A: Width	B: Depth	C: Height
AMG36″	35"	25"	15"
AMG54″	54"	25"	15"

OVERALL PRODUCT DIMENSIONS

Grill Model	A: Width	B: Depth	C: Height
AMG36″	37"	33 ¼"	33 ⅛"
AMG54″	55"	33 ¼"	33 ⅛"

STAND-ALONE (CART) INSTALLATIONS

AMG offers an optional, custom grill cart for stand-alone installations that utilize a standard 20 lb. propane tank. Please note the requirements below regarding propane tank usage and handling, and check the dimensions in the following section for proper clearances in your installation planning process.

IMPORTANT!

- The self-contained LP system barbeque grill is design certified to be used with a standard 20 lb, 12 1/4" diameter,18" high cylinder with right handed connection threads. This is the maximum size LP tank to be used.
- The cylinder must be constructed and marked in accordance
- with the latest U.S. Department of Transportation specifications for LP gas cylinders. (DOT. CFR49 or National Standards Of Canada CAN/CSA-B359 Cylinders, Spheres and Tubes for the Transportation of Dangerous Goods).
- The cylinder must be provided with a shut-off valve terminating in an LP gas supply cylinder valve outlet specified, as applicable, for connection Number QCC-1.
- Your LP tank must include a collar to protect the cylinder threads.
- Your LP tank must include a safety relief device having direct communication with the vapor space of the cylinder.
- The tank location must include a method of secure mounting.
- Only a Propane Tank with an ODP) Overfill Prevention Device) may be used.
- When the grill is not in use, the tank shut off valve should be turned OFF.
- LP CYLINDERS MUST NEVER BE STORED INDOORS. If your grill is stored indoors, the cylinder must be disconnected and removed.

WARNING!

- All natural gas connections must be performed by a licensed contractor or the local gas company
- The gas line must be appropriately sized and installed to supply the maximum demand of the grill without loss of pressure.
- A gas shut-off valve must be installed by a qualified plumber in an easily accessible location.
- ***IMPORTANT:*** Never connect the grill to an unregulated gas supply.
- The installation of this appliance must conform with local codes or in the absence of local codes, to the national fuel gas code, ANSI Z223.1a-1998. Installation in Canada must be in accordance with the standard CAN/ CGA-B149.2, Propane Installation Code.
- The grill must be isolated from the gas supply piping system by closing its individual manual shutoff valve during any pressure testing of the gas supply piping system at test pressures equal to or less than 0.5 psi (3.5kPa).
- The grill and its individual shutoff valve must be disconnected from the gas supply piping system during any pressure testing of that system at test pressure in excess of 0.5 psi (3.5 kPa).

LP GAS REQUIREMENTS

IMPORTANT!

- For you to truly enjoy the experience of cooking on your AMG high performance grill, we recommend connecting it to a bulk fuel supply if possible. A standard 20-pound liquid propane cylinder cannot supply enough gas for extended cooking with gas. If you choose to run your AMG system off propane cylinders, we recommend keeping a spare, full cylinder available.

WARNING!

- All propane gas connections must be performed by a licensed contractor or the local gas company
- The gas line must be appropriately sized and installed to supply the maximum demand of the grill without loss of pressure.
- The sealant used on threaded connections must be resistant to the action of propane gas.
- A gas shut-off valve must be installed by a qualified plumber in an easily accessible location.
- IMPORTANT: Never connect the grill to an unregulated gas supply.
- The installation of this appliance must conform with local codes or in the absence of local codes, to the national fuel gas code, ANSI Z223.1a-1998. Installation in Canada must be in accordance with the standard CAN/ CGA-B149.2, Propane Installation Code.
- The grill must be isolated from the gas supply piping system by closing its individual manual shutoff valve during any pressure testing of the gas supply piping system at test pressures equal to or less than 0.5 psi (3.5kPa).
- The grill and its individual shutoff valve must be disconnected from the gas supply piping system during any pressure testing of that system at test pressure in excess
- of 0.5 psi (3.5 kPa).

INSPECTING YOUR GRILL

Be certain any visible damage to the carton is noted on freight bill or express receipt and signed by the person making delivery. FILE CLAIM FOR DAMAGES IMMEDIATELY, regardless of extent of damage.

CONCEALED LOSS OR DAMAGE

If damage is unnoticed until the grill is unpacked, notify the transportation company or carrier immediately and file a "concealed damage" claim with them. This should be done within (15) days of the date delivery is made to you. Be sure to hold on to the container for inspection. We cannot assume responsibility
for damage or loss incurred in transit.

OPERATING CONTROLS



IMAGE 1

1. **Burner Controls:** Each burner is controlled by a separate gas control valve and igniter. The ignition systems are a two stage, direct spark design that does not require batteries or any assisting powered components. The gas control features variable flame height from low through high.
2. **Control Panel Light Switch:** On/Off control switch for LED lighting above each control knob.
3. **Cooking Light Switch:** On/Off control switch for cooking lights located in the rear hood.
4. **Temperature Gauge:** Measures the air temperature under the hood. The cooking surface temperature is significantly greater than the temperature of the air as read by the hood thermometer.
5. **Hood Vents:** Operable hood vents adjusts air flow for smoking, and for charcoal and wood cooking. Wear a protective grilling glove

STANDARD FEATURES AND CONTROLS



IMAGE 2

to operate the hood vent as it can become quite hot

6. **Grill Hood:** Your AMG hood is a double-wall design with internal, spring assist system. Always open the grill hood before lighting the grill. Keep the hood open when starting a charcoal or wood fire and when the hood thermometer temperature reads greater than 600°F.

7. **Full Length Handle:** The heavy-duty, full length handle enables you to open the hood from either side to avoid the blast of heat that releases from a grill when the hood is opened.

8. **Warming Rack:** The removable warming rack can be used for warming food or for cooking food more slowly than on the primary cooking grates. The warming rack flips up out of the way for convenience while using the optional rotisserie system.

9. **Drip Tray:** The removable AMG drip tray features easy,roller bearing operation with close, drain, and fully open positioning. AMG features a unique drain plug which allows you to drain oils and liquids from the tray before removing it for thorough cleaning.

10. **Cooking Grates:** The standard grill grates are a custom cast stainless design that maximizes rapid cooking heat absorption while minimizing infrared heat exposure to the chef. The grates are reversible for a variety of cooking options. Generally, the convex side (peak) of the grate is for cooking meat while the concave (valley) side of the grate is used for fish and vegetables.

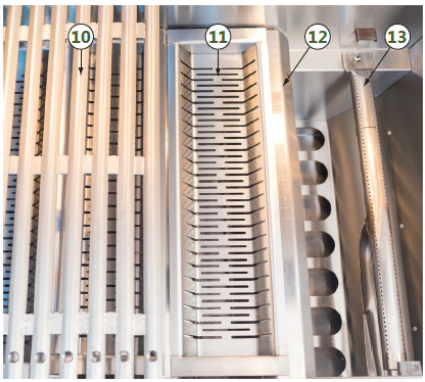

IMAGE 3

11. **Charcoal Trays:** The AMG charcoal tray is a unique, patent-pending design crucial for gas as well as solid fuel cooking. They are laser crafted using heavy, 12-gauge, #430 stainless steel. When cooking with gas and the trays are empty, they absorb and radiate intense heat at a steady temperature. When using solid fuel **NEVER FILL THE TRAYS BEYOND THE MAXIMUM LEVEL INDICATED ON THE TRAYS. THE GRILL WILL OVERHEAT WHICH MAY CAUSE DAMAGE NOT COVERED IN YOUR WARRANTY.**

12. **Burner Covers:** The AMG burner cover is another innovative, patent-pending, component built of 14-gauge, #430 stainless steel. While protecting the burners from falling grease and debris, they also prevent burner ports from becoming clogged. The burner covers also manage the flame with a steady burn and minimum impingement for exceptionally clean, efficient combustion.

13. **Main Burners:** Your AMG grill uses heavy, 1 inch diameter, 14 gauge, #304 stainless burners with a lower adjustable venturi for long life and solid performance. Each burner is 20,000 BTUs for plenty of gas cooking power. The burners are also used for quick and easy lighting of solid fuels in the charcoal trays. Optional plug-and-play sear burners are also available which can be interchanged with any of the standard tube burners.

14. **Power Cord (not shown):** The power cord connects the control panel lighting and cooking lights. Use a customer supplied single-outlet outdoor-rated extension cord to connect this short cord provided to an outdoor-rated GFI outlet.

15. **Lifting Tool:** Cooking with solid fuels is more interactive than simple gas grilling. With the grill in operation, you may want to access or move some components of the grill that will be hot and dangerous. For this reason, AMG has created a custom, multi-purpose tool that allows you to lift and secure the cooking grates in an open position, and also to move and remove the charcoal trays.

16. **Hi-temp Cooking Gloves:** AMG recommends you always wear your protective gloves while using the grill or any time you come into contact with the grill while it is hot. Never use the lifting tool without your protective grilling gloves.

WARNING!

Wear your protective gloves while using the grill or any time you come into contact with the grill while it is hot. Never use the lifting tool without your protective grilling gloves.

AVAILABLE OPTIONS & ACCESSORIES

1. Fully welded stainless steel grill cart
2. 100 lb. Commercial quality rotisserie kit
3. Professional plug and play sear burner
4. Side power burner
5. Masonry stainless steel sealed fuel storage bin/access door combo
6. Sealed stainless steel masonry double vertical drawer kit
7. Masonry stainless steel LP tank/dual trash receptacle pullout
8. Masonry stainless steel double access door
9. Large stainless steel single access door
10. Propane (LP) conversion kit
11. Natural gas (NG) conversion kit

IMPORTANT INSTALLATION WARNINGS

- Please read all instructions before installing or operating your gas grill to prevent injury and appliance damage.
- Never test the grill for gas leaks using a lighted match or any other open flame; see "Leak Testing" procedures using soap/water solutions included in following pages of this manual.
- The use of accessories, regulators, or components not recommended by the appliance manufacturer may cause injuries and will void warranty.
- Be sure that the gas supplied to the grill conforms to the model you purchased. A Natural Gas grill requires natural gas to operate; an LP grill requires liquid propane gas to operate. Check the rating label on the left hand side of the unit to be certain of the gas type intended for this grill.
- Your AMG grill is equipped with a convertible gas regulator that is set at our factory for the type of gas indicated on the rating plate. Never connect the appliance to an unregulated gas supply line. Grills operated without a regulator are unsafe and will not be serviced until installed properly and safely. Unsafe operation without a gas regulator will void warranty of the grill.
- Grills operated with NG (natural gas) must be installed with the regulator supplied with the unit and set to 4.0" water column pressure.
- Grills operated with LP (liquid propane) gas must be installed with the regulator supplied with the unit and set to 11" water column pressure.
- The gas valves used in the grills are preset at the factor for Natural Gas or Liquid Propane operation. Please contact your dealer and use a licensed contractor or installer to convert your grill to a different gas type.
- Never locate the grill under combustible construction.

WARNING!

The shipping weight of your American Muscle Grill is at least 250 pounds. Larger units may weigh over 400 pounds. Use two or more people to move or install this unit. Failure to follow this instruction can result in back or other personal injuries.

UNPACKING THE CARTON

1. 1. Cut the strapping that secures the grill to the pallet.
2. Remove the staples on the lower sides of the carton. Note: It is not necessary to remove the staples at the top of the carton.
3. Slide the carton over the top of the grill and set aside.
4. Remove all LOOSE interior packaging and paperwork from the grill and set safely aside. Be careful to keep all important documentation for future reference.
5. Open the hood and remove all accessories and packaging from inside the grill.
6. Carefully remove all the screws securing

the grill to the pallet and remove the wood bracing.

7. Carefully cut the strapping that secures the grates in position.
8. AMG uses sturdy tie-down cables and straps to ensure your grill arrives at your home in showroom condition. **BE SURE YOU HAVE REMOVED ALL TIE DOWNS BEFORE ATTEMPTING TO LIFT THE GRILL.** With at least 1 buddy, lift the grill from the pallet and place in it's final location

WARNING!

- A manual, gas shut-off valve must be installed in the gas supply line ahead of the gas regulator. Be sure the valve is installed in an easily accessible location.
- Never connect a gas line directly to the grill. A pressure regulator must be installed on all gas equipment. All local codes require it and AMG supplies the correct regulator with your grill. Removing or failing to install the pressure regulator can result in fire and serious personal injury and will void the warranty.
- The grill is factory set to use either propane (LP) or natural gas (NG). It is critical that the gas you use matches that which the grill was set up for. You can verify that by checking the rating plate located on the left hand side of the grill. Converting to a different gas requires a gas conversion kit available from AMG or from your dealer and must be installed by a qualified technician.
- Installation must conform with local codes or, in the absence of local codes, with either the National Fuel Gas Code, ANSI Z223.1/NFPA 54, Natural Gas and propane Installation Code, CSA B149.1, or Propane Storage and Handling Code, B149.2, in Canada.
- Do not operate the grill on any gas other than that for which the grill has been set.

1. Verify that the fuel type that the grill has been configured for matches the fuel supply.
2. Ensure that the gas supply meets with the following minimum and maximum pressure requirements.

MINIMUM AND MAXIMUM GAS PRESSURES

Fuel	Max. Inlet	Min. Inlet
Natural Gas	7.0 In. W.C.	4.0 In. W.C.
Propane	14.0 In. W.C.	11.0 In. W.C.

MAXIMUM GAS CAPACITY

Grill Model	Main Burners	BTU/ Burner	Total BTU
AMG36"	5 ea.	20,000	100,000
AMG54"	8 ea.	20,000	160,000

NATURAL GAS

1. Turn the gas supply valve to the OFF position.
2. Turn all grill control knobs to the OFF position.
3. Connect a suitable natural gas flex connector from the gas supply to the regulator at the rear of the grill.

LIQUID PROPANE GAS

1. Turn the LP tank gas supply valve to the OFF position.
2. Turn all grill control knobs to the OFF position.
3. Connect a suitable Propane (LP) gas hose from the propane tank to the regulator at the rear of the grill.

ELECTRICAL CONNECTION

Your AMG grill uses AC power for the control panel lighting, cooking lights and optional rotisserie motor operation.

NOTE!

- The grill must be electrically grounded in accordance with local codes, or, in the absence of local codes, with the National Electical Code, ANSI/NFPA 70, or the Canadian Electical Code, CSA C22.1.

LEAK TESTING

All AMG gas grills are assembled and tested for leaks at our factory in Irvine, California prior to shipment. However a complete leak test must

be performed after installation due to possible mishandling during shipping or installation. Periodic leak tests are recommended for safety.

NOTE!

- All gas piping and connections must be tested for leaks after installation or service. All leaks must be corrected immediately.
- Homeowners should only check for gas leaks in the external gas piping system from the gas supply to the gas regulator. Leak testing of the gas valves or interior gas connections must be tested by a qualified technician.

DANGER! NEVER USE AN OPEN FLAME TO CHECK FOR LEAKS.

As a safety precaution, remember to always leak test your grill outdoors in a well ventilated area. Never smoke or permit sources of ignition in the area while performing a leak test.

1. Prepare a leak testing solution of soapy water by mixing in a spray bottle one part liquid soap to one part water.
2. Open the valve (shut-off or LP tank).
3. Apply liquid soapy solution to all joints and connections using a spray bottle or brush.
4. Observe all joints for the presence of bubbles. Bubbles forming indicate a gas leak.
5. If there are no bubbles (leaks) in the gas delivery system, close the gas supply valve. Your grill is ready to use.
6. Re-tighten the connection(s) where bubbles are forming.
7. Repeat steps 3-5 above.
8. If you cannot repair the leak: Make sure all control knobs are in the full OFF position.
9. Shut off the gas supply to the grill and release pressure in the hose and manifold by pushing in and turning any of the control valves one quarter turn counter-clockwise.
10. On LP systems, disconnect the cylinder from the grill.
11. Call an authorized gas appliance service technician or an LP gas dealer.
12. Do not use the appliance until the leak is corrected.

OPERATION

WARNING!

- When cooking using solid fuels such as charcoal in this grill, DO NOT FILL THE CHARCOAL TRAYS ABOVE THE INDICATED MAXIMUM LEVEL. Overfilling WILL result in overheating of the grill and can result in death, explosion, or fire.
- • All gas grills will get hot during use. Use extreme caution when operating the grill. Do not touch hot surfaces without your protective hi-temp gloves.
- • Always use the handle to open or close the grill.
- • Never light the grill with the hood closed and be certain that the burners are positioned and seated over the gas valves and on the burner support.
- • Never lean over the cooking surface when lighting or operating the grill.
- • Always use your hi-temp grilling gloves when operating the grill.
- • Close supervision is necessary when this or any appliance is used near children. Keep children away from the grill during operation and until the grill has cooled off.
- • Do not store any LP cylinder or tank not connected for use with the grill in the area of this grill or any other appliance. Never store an LP cylinder or tank indoors or within the reach of children.
- Keep any electrical supply cord and fuel supply hose away from any heated surfaces and dripping grease.
- Do not twist the gas supply hose.
- Before each use, visually inspect the gas supply hose for cracks, cuts or excessive wear. Replace the hose if necessary.
- Children should never be left alone or unattended in an area where a grill is located. Place your grill well away from areas where children play. Do not store items that may interest children in or

around the grill, in the cart, or in the masonry enclosure.

- Never move the grill when hot. When in use, portions of the grill are hot enough to cause severe burns.
- Gas grills are not designed or certified for, and are not to be installed in or on recreational vehicles, portable trailers, boats or any other moving installation.
- Always have an ABC Fire Extinguisher accessible — never attempt to extinguish a grease fire with water or other liquids.
- Store your grill in a well-ventilated area. If stored indoors, detach and leave L.P. Cylinder outdoors in a well ventilated area away from heat and away from where children may tamper with it.
- Keep any electrical supply cord and the fuel supply hose away from any heated surfaces. Electrical cords should be placed away from walkways to avoid tripping hazard.
- Do not store spare LP gas cylinders under or near this appliance.
- Be sure that you know where your gas supply shut-off is located. All gas lines must have a shutoff that is readily and easily accessible.
- Inspect the LP gas supply hose prior to each use of the grill. If there is evidence of excessive abrasion or wear, or the hose is cut, it must be replaced before using the grill.
- Never remove the grounding prong from the plug or use this product with an ungrounded, 2-prong adapter.

NOTE!

Transport only one cylinder at a time. Ensure the cylinder is secured in an upright position with the control valve turned off and the dust cap in place. Store cylinders outdoors and out of reach of children. Do not store cylinders in a building, garage, or any other enclosed area.

REFILLING PROPANE (LP) TANKS

WARNING!

LP GAS CYLINDERS. FILLING, REFILLING AND USE

- All purging and refilling of LP gas cylinders must be performed by qualified personnel in the LP gas industry. Never store a spare LP gas cylinder under or near this appliance.
- Never fill the LP gas cylinder beyond 80 percent full. Failure to follow these instructions may result in explosion, personal injury or death.
- Remember-before exchanging an empty bottle for a new one, make sure all control valves are in the "OFF" position.
- Never use dented, rusty or damaged propane cylinders. Never store additional or empty propane cylinders in the grill cabinet or in the vicinity of this or any other appliance. Do not store propane cylinders indoors or on their sides
- Do not subject your LP gas cylinder to excessive heat, and always store the cylinder in an upright position. Never store your LP cylinders indoors.
- Make sure that when attaching components, all connections are secured and fully tightened to prevent leakage.
- If one is not already available, it is recommended that an ON-OFF shutoff valve be installed at the gas supply source, and that the gas supply be turned off when either Natural Gas or LP Gas grills are not in use.

1. Turn control knobs and cylinder valve to the OFF position.
2. Unscrew valve.
3. Remove cylinder and have it filled at your local qualified propane dealer.
4. Once filled, carefully connect the valve and make sure it is secure and not leaking.
5. With the grill control knobs in the OFF position, turn on the cylinder valve.
6. If you smell gas or hear a hiss of gas escaping from the tank, turn the cylinder valve OFF, get away from the tank and do not attempt to correct the problem yourself.
7. Call the Fire Department immediately.
8. If your grill has no leak at the cylinder, then re-check for loose connections and retest for leaks using the method detailed in the following pages with soapy solution.

LIGHTING YOUR AMG GRILL

STANDARD LIGHTING PROCEDURE:

Each of the burners on your AMG operate independently and must be lit, adjusted, and shut down separately.

1. Open the grill hood.
2. Make sure all the control knobs are in the OFF position.
3. Turn on the main gas supply.
4. Push in any knob until fully depressed and hold in while you rotate it counterclockwise (left). You will feel and hear 1 noticeable "click" as the ignition system sparks. Release the knob in the HIGH position. The burner should ignite within 2-3 seconds. You will see, hear and feel the burner flash upon ignition. If the burner fails to ignite within 5 seconds, depress the knob fully and rotate it clockwise (right) back to the off position.
5. Wait 5 minutes for the gas to fully clear and try again.

MATCH LIGHTING PROCEDURE:

Whenever possible, AMG recommends using the Standard Lighting Procedure above. In the event the grill will not light using this process, it is possible to light the grill using a lighted match.

1. Open the grill hood.
2. Make sure all the control knobs are in the OFF position.
3. Turn on the main gas supply.
4. Push in the knob on the furthest, right side of the grill until fully depressed and hold in while you rotate it counter clockwise(left) and past the 1 ignition "click". Release the knob in the HIGH position. Drop a lighted match down the ignition tube. The burner should ignite within 2-3 seconds. You will see, hear and feel the burner flash upon ignition. If the burner fails to ignite within 5 seconds, depress the knob fully and rotate it clockwise (right) back to the off position.
5. Wait 5 minutes for the gas to fully clear and try again.

BREAK IN.

When lighting the grill for the first time, you will likely notice a moderate amount of smoke and fumes coming from the burners, burner covers and charcoal trays as the components heat up. This is caused by oils that are used in the manufacture of these components and should only last a few minutes. AMG recommends that you burn the grill with all burners on high for at least 30 minutes before using the grill for cooking. When the smoke clears, note the appearance of the flames and check for the presence of any sooting accumulating on the burner covers, charcoal trays, or grates.

TUNE UP.

Each burner is tested and adjusted before leaving our factory in Irvine, California. However they may lose adjustment during shipping and installation. Performance characteristics may also change with altitude and gas characteristics based on your local area. Each burner should produce a steady burning blue flame with little, if any orange at the tips. To check for proper burner operation

1. 1. Remove the grates and charcoal baskets, from inside the grill. Do not remove the burner covers, and this will affect the combustion characteristics of the burner.
2. 2. Individually light the burners and observe the flame one burner at a time. Only light the burner being checked.
3. Each burner port on the tube should produce similar, steady blue tongues of flame with little or no orange at the tips. The flames should not lift off the burner. If the flame is excessively orange or yellow, it usually means the burner needs more primary air and the shutter needs to be opened. If the flames are lifting, the burner is getting too much air and the shutter needs to be closed. The goal is to find the bluest possible flame with no lifting off the burner. You may need to test burn the grill to find this sweet spot.

TUNING THE BURNERS (PRIMARY AIR)

The main burner air shutters are easily accessed by carefully removing the burners.

1. Ensure all of the control knobs on the grill are in the "OFF" position.
2. Remove the grates, charcoal baskets, and burner covers from inside the grill and set carefully aside.
3. Remove the screw and washers at the far, "squashed" end of the burner.
4. Using both hands, hold the burner level and slide it carefully toward the back of the grill until the venturi is free from the gas valve nozzle.
5. Remove the burner.
6. Loosen, but don't remove the shutter set screw.
7. Rotate the shutter to allow more, or less primary air through the openings on the end of the burner venturi.
8. Tighten the shutter set screw to retain the new position.

BEFORE YOU COOK

Before each use, perform a quick safety check of the grill and grilling area.

1. **Clean and inspect the gas hose. If there are signs of abrasion, cuts, wear, abuse or leaks, do not operate the grill.**
2. **Remove and replace the hose using only the type specified by the manufacturer.**
3. **Make sure that the hose is clear of the grill.**
4. **Make sure the area around the grill is clean, and clear of any combustible materials and vapors including alcohol, gasoline, aerosol cans and gas lighters. Make sure any electrical cords are clear, and not in contact with any surfaces of the grill.**

COOKING WITH YOUR AMG GRILL

WARNING!

- Your AMG grill is a high-performance cooking appliance that gets very hot. Use caution when operating the grill and do not leave it unattended.
- Never move the grill while it is in use or still hot.
- Do not touch the grill hood or any surfaces in or around the cooking surface and grill basin while the grill is hot.
- Do not wear loose-fitting clothing, or long sleeves while using your AMG grill as some fabrics can be highly flammable. Do not place clothing or other flammable material on or near the grill.
- Never cover the cooking grates or the drip tray with aluminum foil. This will alter the airflow and combustion properties of the grill and will cause it to overheat.
- This will cause damage to your grill not covered under your warranty.
- Never leave your AMG grill unattended while in use.
- Do not block or obstruct airflow to the vents at the front of your grill.
- Always keep your grill clean and maintained according to these instructions. Failing to maintain your grill can result in a grease fire.
- Alway use your hi-temp, protective gloves to prevent burns to your hands and forearms.

NOTE!

- Become familiar with all the information in this Manual regarding safe operation of your grill.

PREHEATING

Always preheat the grill before beginning to cook. When cooking with gas, preheat the grill with the hood closed. Keep the hood open when starting a charcoal or wood fire.

COOKING OPTIONS

Which type of grilling is the best? It all depends on individual tastes, what type of food you're preparing, and the occasion that has you grilling in the first place. Your AMG is designed to support the full range of outdoor cooking for all occasions. Direct grilling, searing, indirect cooking or roasting, smoking, rotisserie cooking and traditional barbecue are all possible.

The most common type of outdoor cooking, **direct grilling,** places the food on the grill grate directly above the fire. While direct grilling, the hood thermometer won't tell you what the temperature is at the grilling surface (exactly), but it is usually about 25% greater than the thermometer reading. The food
is cooked for a relatively short period of time, usually less than 20 minutes. The temperatures used typically range between 350˚ and 600°F, and the technique is generally appropriate for food that is less than 2 inches in thickness.

Searing is a type of direct grilling using more extreme heat. A grill must be able to reach at least 700°F at the cooking surface for good searing. Searing is done quickly and is often followed by

continued cooking at lower temperatures.
Rotisserie cooking on a spit bastes food in its own juices. The only difference between roasting and rotisserie cooking is the use of the spinning spit. Rotisserie is generally done with indirect heat, but can also be done directly above the fire. Most food that is typically cooked on a rotisserie, such as whole chickens or turkeys, can also be cooked with indirect grilling techniques

Barbeque is a popular form of indirect grilling. Low heat and long cooking times with the use of wood smoke are the key characteristics to success. Temperatures as low as 200°F are used for as long as 24 hours. Barbecue techniques are often used for meats that may otherwise be undesirable or a tough cut, such as beef brisket. The longer cooking times and lower temperatures will render the fat into the muscle to deliver more tender results.

Gas-Fired Grilling: A gas fire offers more convenience than wood or charcoal cooking, and the food can indeed taste great. Gas cooking is cleaner and less time consuming but also a little less fun. Gas fires also produce more water vapor than solid fuels, and will not produce the seasoned flavors that some solid fuels are capable of. The main burners are capable of heating the grill to about 700°F with all burners firing. Remember, the cooking surface is probably 200°F or so hotter than the reading on the grill thermometer.
You can create indirect cooking zones at temperatures between 250°F and 500°F for slowly or quickly roasting foods by leaving at least one or more burners turned off and adjusting the control valves on the remaining burners. We recommend that you pre-heat the grill with all main burners on and the hood closed for at least 10 minutes before adjusting the grill for indirect cooking. We also recommend that the indirect zone (the burners that are off) be the far right or the far left of the grilling area.

Charcoal or Wood Fire: A charcoal or wood fire produces a drier heat than a gas fire, and intense, searing heat in excess of 1,000°F grilling surface temperature can be achieved. We strongly recommend that temperatures in this range be used in only a single zone of the grill and not for the entire cooking area.
You can also create direct/ indirect cooking zones using solid fuels, and temperatures as low as 200°F can be maintained with a charcoal fire by adding just a couple of briquettes at a time to the stable fire in order to maintain the heat at the desired level.

WARNING!

The grill hood must remain open any time the hood thermometer is reading temperatures at or above 700°F.

GAS-FIRED COOKING

Always preheat the grill before beginning to cook. When cooking with gas, preheat the grill with the hood closed. Keep the hood open when starting a charcoal or wood fire.

1. Follow the lighting instructions on page
2. Light all main burners on HIGH and close the hood.
3. The thermometer should read above 500°F within 10 minutes.
4. Adjust or turn off individual main burners as needed for the desired cooking temperature after the first 5-10 minutes have elapsed.

CHARCOAL BRIQUETTE-FIRED COOKING:

WARNING!

NEVER FILL THE TRAYS BEYOND THE MAXIMUM LEVEL INDICATED ON THE TRAYS. THE GRILL WILL OVERHEAT

WHICH MAY CAUSE DAMAGE NOT COVERED IN YOUR WARRANTY.



1. Place an even, single layer of charcoal briquettes up to, or below the maximum level indicated on the fuel trays you will be using. Image 4. above shows an example of the MAXIMUM allowable level. You'll be surprised how much heat is generated by this amount of briquettes.
2. Light the main burners to the left and right sides of each tray and leave in the HIGH position. LEAVE THE HOOD OPEN while the gas is on and the charcoal begins to burn.
3. Once the charcoal is burning at a sufficient level (5-10 min.), you may turn off the main burners.
4. The charcoal fire will go through an intense burning cycle before it is ready to be used for cooking. Leave the hood open while this occurs. Wait until the fire has burned down to an appropriate level before closing the hood and proceeding with cooking on the grill. Generally, charcoal grilling is done over coals that show little visible flame but are glowing red underneath a layer of white ash.

NATURAL (LUMP) CHARCOAL-FIRED COOKING

WARNING!

NEVER FILL THE TRAYS BEYOND THE MAXIMUM LEVEL INDICATED ON THE TRAYS. THE GRILL WILL OVERHEAT

WHICH MAY CAUSE DAMAGE NOT COVERED IN YOUR WARRANTY.



1. Place an even, single layer of lump charcoal up to, or below the maximum level indicated on the fuel trays you will be using. Image 5. above shows the MAXIMUM allowable level to use in your grill. You'll be amazed how much heat is generated by this amount of lump charcoal.
2. Light the main burners to the left and right sides of each tray and leave in the HIGH position. LEAVE THE HOOD OPEN while the gas is on and the charcoal begins to burn.
3. Once the charcoal is burning at a sufficient level (5-10 min.), you may turn off the main burners.
4. The charcoal fire will go through an intense burning cycle before it is ready to be used for cooking. Leave the hood open while this occurs. Wait until the fire has burned down to an appropriate level before closing the hood and proceeding with cooking on the grill. Generally, charcoal grilling is done over coals that show little visible flame but are glowing red underneath a layer of white ash.

WOOD-FIRED COOKING

WARNING!

NEVER FILL THE TRAYS BEYOND THE MAXIMUM LEVEL INDICATED ON THE TRAYS. THE GRILL WILL OVERHEAT

WHICH MAY CAUSE DAMAGE NOT COVERED IN YOUR WARRANTY.



1. Place a single layer of properly seasoned, cooking wood chunks up to or below the maximum level indicated on the fuel trays you will be using. Image 6. above shows the MAXIMUM allowable level to use in your grill.
2. Light the main burners to the left and right sides of each tray and leave in the HIGH position. LEAVE THE HOOD OPEN while the wood begins to burn.
3. Once the wood is burning at a proper level, you may turn off the main burners and close the hood if you wish.
4. The wood fire will go through an intense burning cycle before it is ready to be used for cooking. Leave the hood open while this occurs. Wait until the fire has burned down to an appropriate level before closing the hood and proceeding with cooking on the grill. Generally, wood grilling is done over a low and even flame that does not reach the height of the cooking surface.

MULTI-FUEL COOKING

WARNING!

NEVER FILL THE TRAYS BEYOND THE MAXIMUM LEVEL INDICATED ON THE TRAYS. THE GRILL WILL OVERHEAT

WHICH MAY CAUSE DAMAGE NOT COVERED IN YOUR WARRANTY.



MANAGING SOLID FUEL

Cooking with solid fuels over an extended period of time requires more interaction than simple gas grilling. Depending on how much cooking you're planning, you may need to occasionally add additional fuel. You may also want to move charcoal trays to different areas of the grill to create direct and indirect zones as well as intense or milder heat areas. For this reason, we've included a specialized, custom tool and a pair of high temperature protective leather gloves. The tool enables you to lift and maintain the cooking grates in an open position to access the fuel baskets.

ADDING SOLID FUELS:

WARNING!

- **Always wear your protective gloves while using the grill or any time you come into contact with the grill while it is hot. Never use the lifting tool without your protective grilling gloves.**
- **The back of the grate is secured using 2 positioning pins. Be careful not to lift the rear of the grate off of the pins when raising it to the open position**

NOTE!

- Your grill is designed so that you can lift and secure the grates with the warming rack in either the up or down position, however you may want to put it in the up position before lifting the cooking grate.

1. Insert the tail-hook at the heel of the tool securely and fully in the hole at the front of the center grate finger (the short one) as shown in image 8.
2. Carefully lift the front of the grate up and backward toward the rear hood. Keep pressure on the hook to prevent it from coming out of the hole.
3. Carefully secure the two downward-facing

pins at the front of the tool through the bracket on the front of the rear hood as shown in image.
4. Release the handle.
5. Take care to avoid hot metal parts of the grill while adding fuel to the baskets.
6. When finished adding solid fuel, carefully disengage the nose pins from the bracket by lifting the front of the tool upward without releasing the tail hook.
7. Lower the cooking grate back to it's working position.

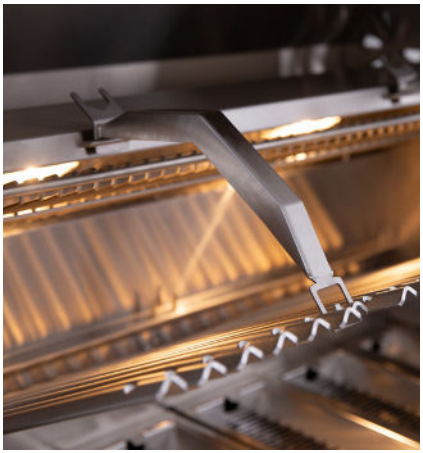

MAINTENANCE & CARE

Your AMG Combination Grill is made from heavy gauge, high quality stainless steel and engineered for extreme durability. It is also a uniquely beautiful grill with design character and quality you will want to maintain. Simple care and cleaning will provide a lifetime of service.

CLEANING YOUR AMG GRILL

WARNING!

- **Never use metallic abrasives or brushes to clean your stainless surfaces.**
- **Always rub in the direction of the grain.**

EXTERIOR SURFACES CLEANING

1. After each use wipe down the exterior of the grill to remove grease and splatters.
2. Use a commercially available Stainless Steel cleaner to regularly clean and polish the exterior surfaces.
3. The most difficult part of cleaning your grill is removing burnt-on food and grease.
4. Using a citrus-based or organic de-greaser to remove everything that isn't burnt-on.
5. Next, use powdered Bar Keepers Friend with a terrycloth rag to remove the bulk of stubborn stains and discoloration.
6. Be careful to follow the grain direction of the stainless steel to avoid scratches.
7. For real problem areas, a Scratch-B-Gone kit can be used to restore the factory finish.
8. Rinse off all cleaners, wait for the grill to dry, and then apply stainless steel polish.

INTERIOR CLEANING

- **The more you use sauces or grill fatty foods, and the more solid fuels you use with the hood closed, the more frequently It is highly recommended to occasionally burn off residue in your grill. Most of the cooking residue will be on the cooking grates or caught in the charcoal trays. This is particularly true the more you cook with solid fuels. Run the grill with the main burners on high with the hood closed for at least 30 minutes to burn off accumulated residue and dry everything out.**
- **Most of the solid fuel ash that falls through the trays will pass through directly through the basin to the drip tray. To remove ash from the drip tray, you can easily remove it by pulling all the way out the front of the grill to empty. You can also use a shop vac to simply vacuum ash out of the drip tray if you prefer.**

- **Occasionally, you will want to be more thorough removing ash from the inside of the grill.**

1. Perform a "Burn off" cleaning as described above to remove as much cooking residue as possible.
2. Wait until the grill is completely cool, then empty the drip pan as described above.
3. Remove the cooking grates, and then sweep ash off all the interior surfaces of your grill using a natural bristle painter's brush, or vacuum with a brush attachment.
4. Next, remove the charcoal trays and empty, or vacuum them clean.
5. Use the brush or vacuum to remove all ash from the burner covers, then remove them.
6. Brush or vacuum all ash from the burner surfaces. Check the burner ports on the sides of the burners to make sure they are all clear. Clean any blocked ports with a small modified paper clip or other suitable tool.
7. Finally, sweep or vacuum the remaining ash from the bottom of the firebox basin.
8. Empty the clean-out pan again.

GRILLING GRATES

NOTE!

- Use only a stainless steel or brass bristle brush for cleaning your cooking grates. Never use a steel wire brush or steel wool on your grates. It will leave small amounts of mild carbon steel behind, embedded into the grain of the stainless steel that will cause rust.

- **The more you use sauces or grill fatty foods, and the more solid fuels you use with the hood closed, the more frequently It is highly recommended to occasionally burn off residue in your grill. Most of the cooking residue will be on the cooking grates or caught in the charcoal trays. This is particularly true the more you cook with solid fuels. Run the grill with the main burners on high with the hood closed for at least 30 minutes to burn off accumulated residue and dry everything out.**
- **Most of the solid fuel ash that falls through the trays will pass through directly through the basin to the drip tray. To remove ash from the drip tray, you can easily remove it by pulling all the way out the front of the grill to empty. You can also use a shop vac to simply vacuum ash out of the drip tray if you prefer.**
- **Occasionally, you will want to be more thorough removing ash from the inside of the grill.**

GRILLING GRATES

NOTE!

- Use only a stainless steel or brass bristle brush for cleaning your cooking grates. Never use a steel wire brush or steel wool on your grates. It will leave small amounts of mild carbon steel behind, embedded into the grain of the stainless steel that will cause rust.

- **Before each cooking session, after the grill has preheated, use a stiff stainless steel grill brush to clean the cooking grates.**
- **After each cooking session, run the main burners on high with the hood closed for 10 minutes before shutting it down. This will help burn away drippings and residue on the grate surface and in the basin.**
- **The front of your AMG lifting tool can be used to scrape off chunks of debris that gather between fingers of the grilling grates. You can use the tool for this rough cleaning before or after cooking.**
- **NEVER use chemicals to clean your grilling grate surface.**

WARNING!

- **The drip tray gets extremely hot when the grill is operating. Empty the drip tray only when the grill and tray are completely cool.**

NOTE!

- Rainwater can accumulate in the drip pan if the grill is not covered. If you suspect the tray has water in it, take care opening the tray to avoid spilling the water on yourself

1. Carefully pull open the drip tray to it's first open position.
2. If the tray has water in it, place a bucket under the drain plug large enough to hold the water. If there is no water in the tray, proceed to step #6 below.
3. Remove the drain plug by turning counter clockwise and set aside.
4. Once the water has drained, open the tray all the way.
5. Clean out the rest of the loose debris with clean water.
6. If the drip pan is dry, you can clean out the ash either using a vacuum, or by removing the pan by pulling the tray all the way out the front and dumping.
7. If there is grease in the pan clean it using a mild cleanser such as dish soap or Simple Green.
8. Replace the drip tray to it's fully installed position.

BURNER PERFORMANCE & CARE

The design of your AMG grill provides superior protection of the burners from grease, and debris resulting from normal use. However extended periods of non-use can allow debris and pests as a result of being outside to accumulate in the burner
area. In addition to removing all the ash from the burners at least once per month as described above, the burners should be visually inspected at least once a year. Before attempting to access the burners, first make sure the grill is completely cooled.

1. 1. Ensure the grill control valves are in the OFF position and turn off the main gas supply.
2. 2. Remove the cooking grates and charcoal trays.
3. 3. Remove the burner covers.
4. 4. Remove the retaining screw and washer securing the burner to the back of the grill basin.
5. 5. Holding the burner with both hands, carefully slide the burner toward the rear of the grill until the venturi is clear of the valve nozzle, then lift it out of the basin.
6. 6. Visually inspect each burner to confirm it is structurally sound and that none of the ports are clogged.
7. 7. Shine a flashlight through the end of the venturi to inspect for any blockages.
8. 8. Carefully clean the burner using a brass brush. Clogged burner ports may be cleared using compressed air, a pin, or straightened paper clip. Do not use a wooden toothpick or anything else that could break off and become lodged inside burner ports.
9. 9. After cleaning the burners, reinstall them into the grill by inserting the venturi air shutter over the valve nozzle and orifice all the way to the stop. You must make sure the opening at the front of the burner is centered over the brass orifice and securely engaged.
10. 10. Holding the burner in place with one hand, align the slot in the squashed end (rear) of the burner with the retaining screw hole and thread the screw into the hole using your free hand.
11. 11. Tighten the screw using a phillips head screwdriver.

WARNING!

- **IF YOU SMELL GAS WHILE LIGHTING OR OPERATING YOUR GRILL, SHUT OFF YOUR GAS SUPPLY VALVE IMMEDIATELY. FOLLOW THE INSTRUCTIONS ON PAGE 3 OF THIS MANUAL, THEN TEST FOR LEAKS.**

If you have trouble lighting or properly operating your AMG grill, please check a few of the most common and simple conditions prior to calling for service, or before you attempt more significant repairs on your own.

1. Be sure that there is adequate fuel supplied to the grill.
2. Make sure all manual shut-off valves are fully open.
3. Make sure that you are using the correct fuel type (LP or NG).
4. If the problem is related to the lights, or the optional rotisserie, make sure there is power to the grill.

Lifetime Warranty on construction and manufacturers defects
Lifetime Warranty on frame and housing
Lifetime Warranty on cooking grates, burners and valves
One year warranty on all other parts, components and electrical

Summerset Professional Grills Warranty is valid for original purchaser at original site of delivery with proof of purchase and photo documentation only. Registration form must be submitted within 30 days of the purchase date to validate the warranty. Warranty is void upon transfer of ownership. Warranty does not apply to products installed in any commercial, rental, or non-residential application. Warranty covers replacement parts only. Manufacturer is not responsible for labor or labor-related costs. Warranty does not cover discoloration, surface rust, corrosion, or oxidation, which may occur due to harsh environments, chemicals, or overheating. Warranty will not apply for damage resulting from improper installations, abuse, extreme environments, grease fires, or misuse. Regular and proper maintenance is required. Coastal, humid, and/or salt environments are subject to manufacturer review. All out-of-box claims must be made within 30 days of purchase and must be made prior to installation. Any product installed damaged will be considered damaged during installation and not covered under warranty. Warranty and registration forms are available at www.SummersetGrills.com. Please be advised – all display models are sold "as is" and the warranty covers the following items only: main burners (lifetime), grates (lifetime), burner covers (1 year). All warranties are subject to the review and approval of the manufacturer.

WARRANTY NOTE

The Summerset Lifetime Warranty provides protection against rust through of parts that render the product inoperative. It does not cover occasional surface rust or staining due to environmental conditions.

PROBLEM	POSSIBLE CAUSE	WHAT TO DO
None of the Burners light	1. The grill is not getting gas. 2. Low gas pressure. 3. Propane bottle safety activated. 4. Air trapped in the gas line. 5. Defective gas regulator.	1. Check gas supply. 2. Check gas line for kinking or blockage. 3. Close all gas valves. Reset LP bottle. 4. Bleed air from gas line. 5. Replace gas regulator.
An individual burner won't light	1. Gas valve orifice is blocked. 2. Faulty valve igniter. 3. Faulty gas valve. 4. Burner is dirty or blocked.	1. Clean gas valve orifice. 2. Replace gas valve. 3. Replace gas valve. 4. Clean burner.
Low flame/ low heat	1. Low gas pressure. 2. Grill is set up for LP but burning NG. 3. Gas line kinked or partially blocked. 4. Faulty gas regulator.	1. Check gas supply. 2. Convert grill to fuel type supplied, or provide proper fuel to grill. 3. Check gas line for kinking or blockage. 4. Replace gas regulator.
Too much flame/ too much heat (gas)	1. Grill is set up for NG and burning LP. 2. Orifice is too large or missing. 3. High gas pressure.	1. Convert grill to LP, or provide NG fuel to grill. 2. Install proper orifice. 3. Make sure gas regulator is functioning properly.
Too much flame/ too much heat (solid fuel)	1. Too much fuel in charcoal baskets.	1. Leave hood open and allow fuel to burn down. When flame has subsided, reload baskets with proper amount of fuel as described in these instructions.
Uneven burner flame/uneven heat	1. Gas valve orifices and/ or burners are dirty or partially blocked. 2. Low gas pressure.	1. Clean burners and valve orifices. 2. Provide sufficient gas pressure to grill.
Excessively orange or yellow gas flame	1. Burner(s) out of adjustment. 2. Burner(s) are dirty. 3. Burner flame(s) impinged.	1. Adjust burner air shutter(s). 2. Clean burner(s). 3. Check flame paths for foreign objects.
Burner flares up at control panel	1. Valve nozzle not inserted in burner. 2. Gas valve has a leak.	1. Properly insert valve nozzle into burner inlet. 2. Replace gas valve.
Burner blows out	1. Burner adjustment too lean. 2. Burner is exposed to wind. 3. Burner unseated from valve nozzle.	1. Adjust burner air shutter to a more closed position. 2. Re-orient the grill away from, or block the wind. 3. Reposition the burner on the valve nozzle.
Grill shuts off	1. Faulty gas regulator.	1. Replace gas regulator.
Interior cooking lights don't work	1. Grill does not have electricity. 2. Broken wire or loose connection. 3. Faulty On/ Off switch.	1. Provide power to the grill. 2. Repair wire or make connection. 3. Replace light switch.
LED control panel lights don't work	1. Grill does not have electricity. 2. Broken wire or loose connection. 3. Faulty On/ Off switch.	1. Provide power to the grill. 2. Repair wire or make connection. 3. Replace light switch.

WIRING DIAGRAM: AMG 36

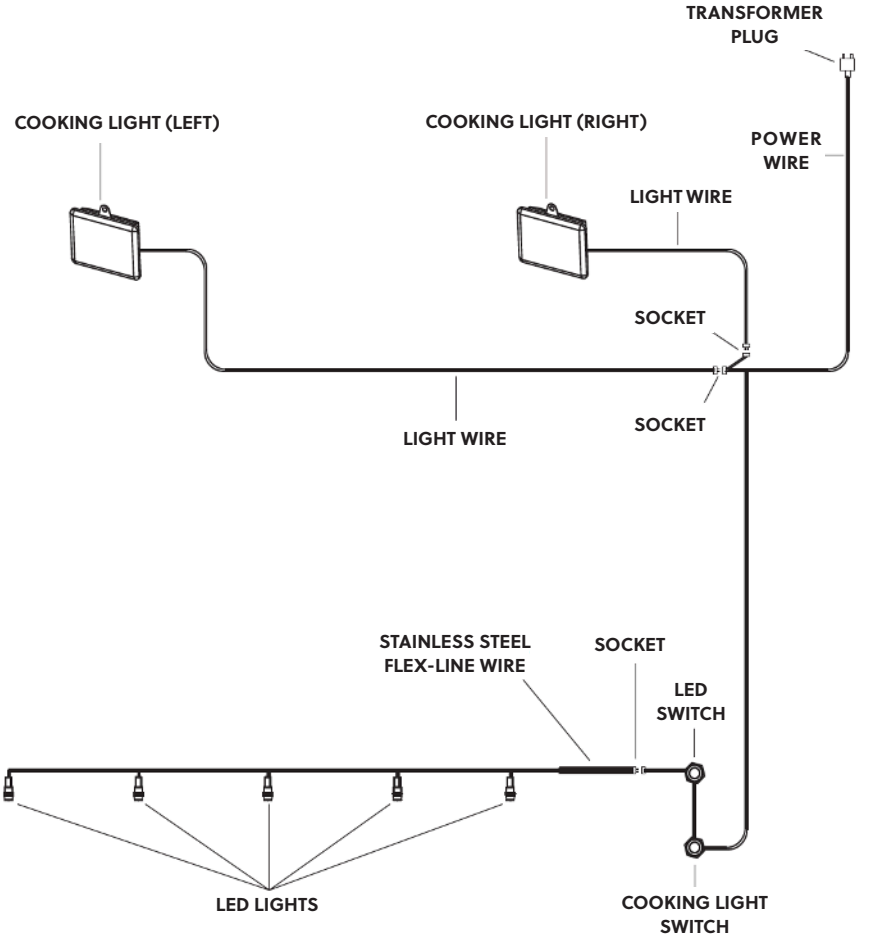

WE MAKE IT ALL

Summerset Professional Grills strives to meet every outdoor living expression. We offer a wide range of products from grills, refrigeration, sinks, accessories and more. Our goal is to ensure you have everything you need to create your perfect outdoor atmosphere. No matter the style or budget, Summerset will deliver an experience that will help create the ultimate backyard getaway.



ACCESSORIES

Summerset's full line of stainless steal outdoor kitchen components makes sure you have everything you need for the perfect outdoor kitchen experience. Double-lined construction provides the extra insulation and resilience needed against the elements, soft closing drawers offer a luxurious feel, and a thicker flange provides a sturdy, seamless fit and elegant style that will work with any countertop and island finish.



REFRIGERATION

Summerset offers a wide variety of luxury stainless steel refrigerators, wine coolers, and kegerators. With up to 6.6 cubic feet of storage, these appliances will help keep your food fresh, wine chilled, and beer flowing, bringing the function of your indoor refrigeration outside to join the party.



SINKS & BAR PREP

Take your outdoor kitchen to the next level with our sinks and ice chests. The Summerset Beverage Center is complete with an ice compartment, sink, towel holder, speed rail with condiment tray, LED lights, and a built-in bottle opener. When you're grilling, we want to make sure you have everything you need conveniently on hand.