Le Griddle Gas
GFE40 - GFE75 - GFE105

Instructions Manual

Dear Customer,

Thank you for purchasing this Le Griddle product. It is very easy to use, but we strongly recommend that you carefully read these instructions which include advice on how to use and install your appliance in order to obtain optimum and safe results.

Reception and unpacking
Should you notice any damage when unpacking, please contact your retailer.

General rules applicable to gas equipment

EXCLUSIVELY USE THE GRIDDLE OUTDOOR IN A WELL VENTILATED AREA AND ABOVE GROUND (I.E NOT IN AREAS THAT ARE BELOW GROUND LEVEL).

⚠ DANGER:

if you smell gas:

1. **Shut off gas to appliance.**
2. **Extinguish any open flame.**
3. **Open lid.**
4. **If odor continues, keep away from the appliance and immediately call your gas supplier or your fire department.**

⚠ WARNING:

1. **Do not store or use gasoline or other flammable liquids or vapors in the vicinity of this or any other appliance.**
2. **An LP cylinder not connected for use shall not be stored in the vicinity of this or any other appliance.**

When using gas appliances, safety measures must always be taken: Please read all the instructions carefully.

- This appliance is not designed for use by people (including children) whose physical, sensorial or mental capacities are impaired or by people with no experience or knowledge, unless they have been supervised or given training in the use of the appliance beforehand by a person responsible for their safety.
- Some parts can be hot, keep children away from the Griddle
- The appliance must never be left without supervision during use.
- Do not move the appliance during operation.
- Do not use the appliance for anything other than the purpose which is intended.
- There is a risk of accidents if accessories used are not recommended by the manufacturer of the appliance.
- This appliance must be kept away from flammable materials.
- If you smell gas, turn off all the valves.
- Never use an appliance that has a gas leak.
- Use protective gloves when handling particularly hot parts of the appliance.
- Allow the appliance to cool down before handling.
- Use this appliance out of the wind.
- The underneath of the appliance must be kept well ventilated to ensure good air circulation to the burner.
- Place the appliance on a stable, dry surface, slightly away from the edge and more than 12 inches away from any walls or heat-sensitive objects.
- Recommended hot plate height: 33 to 37 in from the ground for a comfortable working position.
- Close the gas cylinder valve after use.
- Any modification of the appliance may be dangerous. Do not modify this appliance.
- Do not use an adjustable gas regulator.
- Do not obstruct the ventilation openings on the frame.
- Warning: Do not use or store any flammable liquids or vapors in the vicinity of the Griddle.
- Close the valve on the gas cylinder when the griddle is not in use. Store the appliance in a dry, well ventilated place.
- We recommend you to keep the original packaging in order to store the appliance.

KEEP THESE INSTRUCTIONS

Le Griddle cannot be held responsible for any damage incurred to objects or people resulting from incorrect installation of the appliance.

DO NOT connect high pressure gas to the Le Griddle. These griddles use low pressure, 1/2" psi to operate correctly. An example of an approved regulator and hose kit would be the RONHK which you may order on line at www.LeGriddleUS.com.

Technical description

Characteristics

- Stainless steel frame
- Stainless steel cooking plate certified for contact with food
- Stainless steel burners
- Thermocouples (automatic gas cut-out if flame goes out)
- Flame protection from normal wind
- Electronic ignition (battery AA included)
- Uses butane/propane or natural gas (may require gas conversion)
- Rim on 3 sides
- Removable tray for liquid and waste recovery
- A protective cover (optional)

Reference	Size in inches W x D x H	Gas	weight	BTU	Orifice	Cooking surface	Cooking material	Gas Connection
GFE 40	16 ½ x 18 ¾ x 10	PROPANE or NATURAL GAS	52lb	1x9000	0,9(LPG) 1,3(NG)	16 x 15.75	Enameled cast iron	3/8 FLARE
GFE 75	30 x 18 ¾ x 10	PROPANE or NATURAL GAS	98lb	2x9000	0,9(LPG) 1,3(NG)	29 x 15.75	Enameled cast iron	3/8 FLARE
GFE 105	41 ¾ x 18 ¾ x 10	PROPANE or NATURAL GAS	120lb	3x9000	0,9(LPG) 1,3(NG)	41.25 x 15.75	Enameled cast iron	3/8 FLARE

Operation

Installation

Install the Griddle on a flat surface coated with an inflammable material (tiles, fire brick, etc.). The distance between the Griddle and the adjacent walls must be at least 12”.
We recommend bottles of propane, using the appropriate pressure regulator or natural gas. Keep the gas bottle as far away as possible from any heat sources, placing it on the ground alongside or behind the Le Griddle.

Plug In

Make sure the control knobs are in the off position. The Griddle must be connected using the 3/8 flare connection.
The hose length must be suitable for your use and visible along its entire length.
Check that the flexible hose is in good condition and do not hesitate to change it if it looks cracked or damaged. The flexible hose must not be twisted or pulled and must not come into contact with hot parts of the appliance. After connecting the hose to the appliance, connect the pressure regulator to the hose and the gas cylinder or natural gas supply, following the instructions supplied with the pressure regulator and the hose. Then check for gas leaks as follows:
Check for leaks using soapy water, away from any heat sources (cigarette, electrical appliance, etc.). Never test for leaks using a flame.

- Put soapy water on all the connections, turn on the gas supply values and check whether any bubbles form.
- The presence of a bubble = gas leak; shut off the gas cylinder or gas supply and tighten the connections again. Repeat the test for leaks.
- If the leak persists or comes from another part, do not use your Le Griddle and contact the manufacturer.

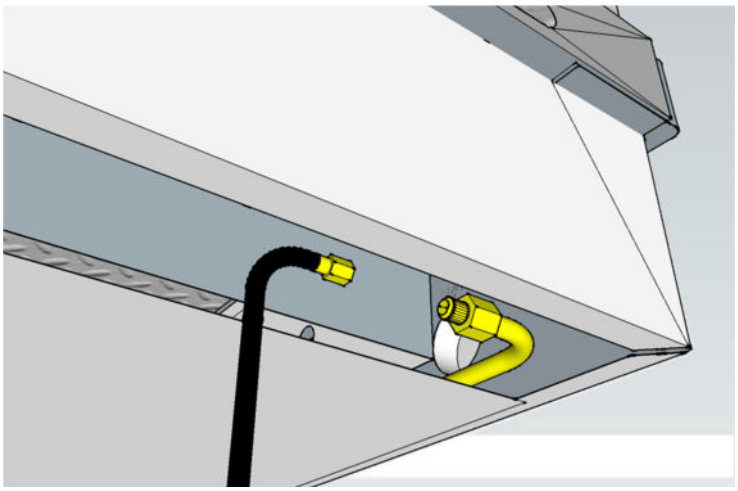

⚠DANGER: NEVER USE AN APPLIANCE THAT LEAKS.

Your new Le Griddle arrives configured to operate on propane (LP) gas. To convert it to Natural Gas please follow these simple steps.

1. Remove the griddle plate by lifting straight up. Be careful, it is VERY heavy.
2. Remove the screw located at the rear of each burner (Pic #1)
3. Remove the nut located under the front control panel which also holds burner in place. (Pic 2)
4. Carefully remove the 10 mm nut that holds the thermocouple in place (Pic 3) Note the position of the thermocouple as it is important to replace it in the same position later.
5. Lift up the rear of the burner just enough to pull it back and set it aside to gain access to the orifice located in the front control panel. Be cautious of the ignitor wire and ceramic tip which are still attached and are fragile.
6. Using a 7 mm socket, gently remove the original orifice and replace it with the natural gas one. The natural gas orifice (hole) is slightly larger than the LP due to the properties of the gas.
7. Put the burner back in place, replace the thermocouple nut mounting it back where it was, then replace the nut under the control panel and the screw in the rear of the body and you're done!

Pic 1

Pic 4

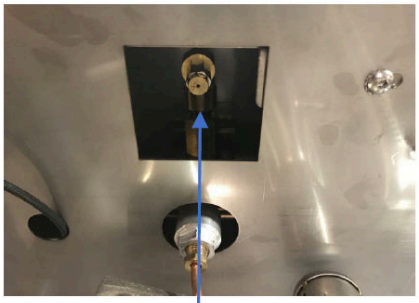

Pic 2

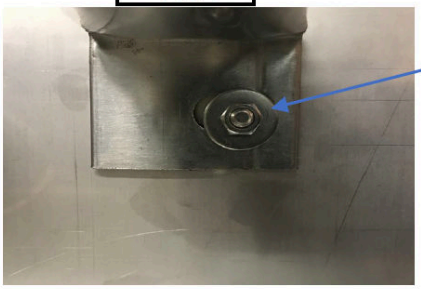

Pic 3

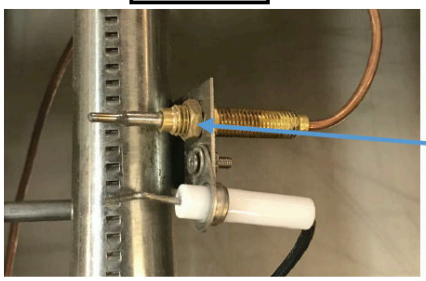

Changing the gas bottle

LP cylinder must always be changed with the control knobs in the off position and the valve of the gas bottle shut.

LP cylinder must be changed in a well-ventilated place, away from any heat sources (cigarette, electrical appliance, etc.).

Always check for gas leaks after every LP cylinder change.

Use

Switching on

1. Once installed, the appliance is ready to use. Make sure the gas valve on the cylinder is turned on. If you smell gas, shut the gas valve of the LP cylinder and tighten the connections again.
2. Turn on the valve by turning the control knob to the left, turn the control knob to big flame position (drawing on knob).
3. Holding it in this position, push the knob in and press the ignition button until it generates a spark and lights the burner.
4. Keep the knob depressed for 5 to 10 seconds to trigger the thermocouple safety system.
5. Then release the knob and allow the burner to heat the hot plate to the right temperature.
6. Your appliance is now ready for cooking on.
7. Surface temperatures and cooking times will vary depending on the type of gas used, LP or natural, the ambient temperature while cooking outdoors as well as other factors.
8. Preheat time: 15 min for an outside temperature of 70°F. Increase or reduce this time depending on the outside temperature by 5 min for 15°F. Medium is the preferred temperature setting for most foods.
9. Do not preheat with the lid close.
10. Do not let the griddle heat without any food on it for more than 30 min.
11. Do not use a laser gun to measure the temperature, the stainless steel reflects preventing proper functioning. Use a contact thermometer only.

Comments

- The appliance may give off a little smoke or odor the first time it is used; this is perfectly normal.
- Each time the griddle is used, push and turn the knob to the big flame position and hold it down for 2 seconds to allow air to escape, then push the ignition button and hold for 2 more seconds, then release the knob.
- To see the flame, look through the side of the appliance.

Shutting Down

1. After use, switch off your appliance, turning the knobs clockwise to Off position.
2. Shut the gas bottle valve.
3. Disconnect the gas hose from the appliance and store in a dry, well ventilated place. The gas bottle must also be stored in a dry, well ventilated place, away from any heat sources.

Cooking:

Over time, you will be able to gauge the right cooking temperature according to the thickness and texture of food and adapt it to your taste.

For cooking and cleaning videos and tips, go to LeGriddleUS.com

Advice:
Do not cut food directly on the plate to avoid causing deep scratches.
Do not leave kitchen utensils on the Griddle, such as cutlery, wooden spoons, plastic utensils, etc.
Do not overheat the griddle when cooking as this could blacken the plate and make cleaning difficult.
The Griddle can also be used to keep food warm after cooking.

Cleaning and maintenance

The frame
To avoid any risk of burns, you are advised to always allow the hot plate to cool down before cleaning the frame. Clean with a sponge soaked in warm water and detergent. Never use abrasives or steel wire brushes.
The hot plate
The plate is easier to clean when the Griddle is still slightly warm. Beware of the risk of burns.
The stainless-steel plate on the Griddle is shiny before use. The surface is likely to become dull and scratched once utensils have been used. After a while, the scratches will fade and the plate will have a brushed, weathered look.
After the appliance has been used several times, grease residues may appear on the hot plate; this is perfectly normal.
To remove these, pour a glass of cold water or place ice cubes on the hot plate and scrape off residue with a spatula or scraper. You can also soak residues in water.
During use, these residues may become detached by themselves; this does not mean that the hot plate has been damaged.
Then pour some water on the hot plate to soak the remaining residue (use a wet sponge or ice cubes).
Leave for a few minutes.

With a rigid spatula, remove the water and sticky residue and push it towards the drip tray.
Clean with a scouring pad and then a soft sponge.

Pour some vinegar on the plate to remove smells and strong tastes.
Clean the plate promptly after preparing salty food to avoid any risk of corrosion. Do not use chlorine-based cleaning products as they can also cause corrosion.

The burner
Check the condition of the flame holes on the burners from time to time. If they are blocked, brush the arms with a stiff bristled brush. Before using again, wipe the burners thoroughly along with the base of the Le Griddle.
To clean the injectors, you are strongly advised against using metal objects as these could alter the technical specifications of the burners.

The drip tray
It allows to collect juices and crumbs off the griddle surface.
You must handle it when it is cold, it must be emptied and cleaned after each use.

The Igniter
It is delivered with an AA (1,5V) battery.
To change this battery, unscrew the push-button knob on the front panel.

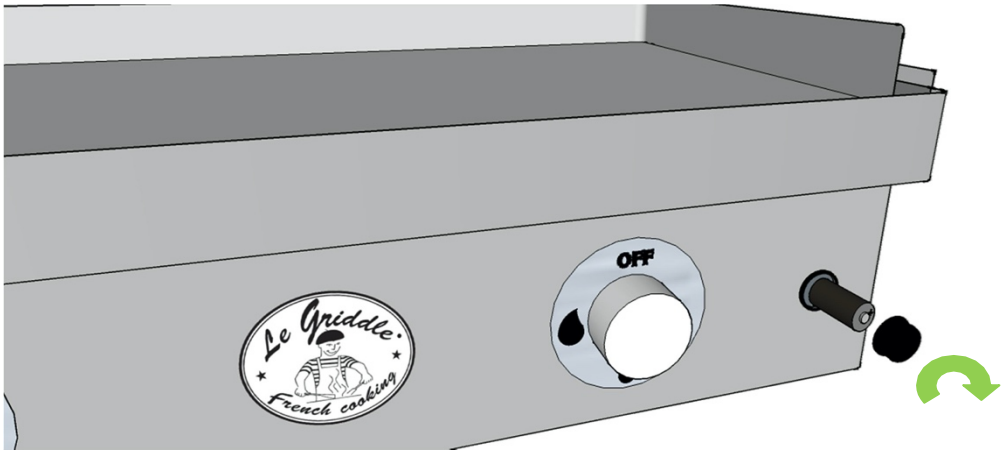

Storage
The gas Bottle must be disconnected, then stored away from any heat sources.
Store your Griddle in a dry, sheltered place where there is no risk of it being damaged.
The optional protection cover must be used only when the Le Griddle is cold.

BUILT:

- The underneath of the appliance must be kept well ventilated to ensure good air circulation to the burner.
- Place the appliance on a stable, dry surface, slightly away from the edge and more than 12 inches away from any walls or heat-sensitive objects.
- Recommended hot plate height: 33 to 37 inches from the ground for a comfortable working position
- Do not use worktop with combustible material
- The structure must allow a perfect air circulation to the griddle and gas cylinder
- Model GFE75 shown below
- If installed in an outdoor kitchen, it must be non-combustible materials or incorporate a liner by Le Griddle.

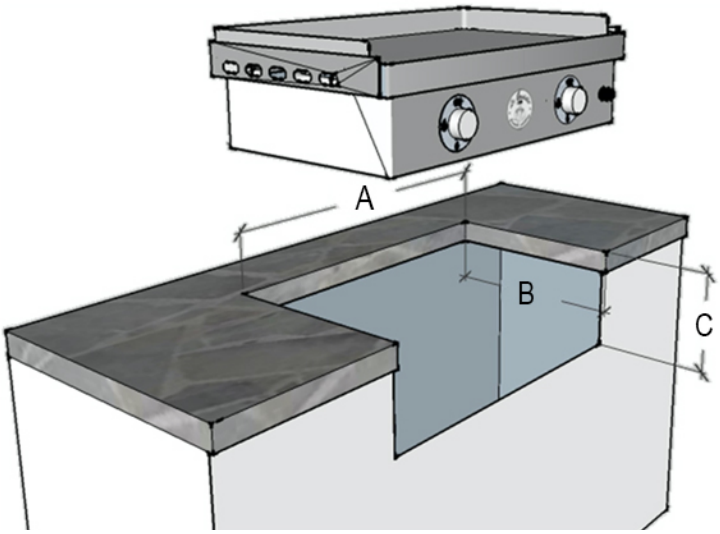

A	B	C

Item #	Description	Width	Length	Depth
GFE40	16” Le Griddle (1 Burner)	14 ¾”	16 ¾”	5 ¾”
GFELINER40	16” Le Griddle Liner	17 ½”	17 ½”	7 ¼”
GFE75	30” Le Griddle (2 Burner)	28 ¾”	16 ¾”	5 ¾”
GFLINER75	30” Le Griddle Liner	31 ½”	17 ½”	7 ¼”
GFE105	41” Le Griddle (3 Burner)	40 ½”	16 ¾”	5 ¾”
GFLINER105	41” Le Griddle Liner	43”	17 ½”	7 ¼”

Guarantee and after-sales service

This appliance is guaranteed for residential use only:

- Lifetime against rust through of stainless steel
- 5 years for burners
- 1 year parts
- The guarantee starts from the date of purchase.

We take great care to ensure that each of our appliances reaches the user in perfect operating condition. If you do find a problem when unpacking your appliance, please report it to the retailer within 48 hours. If you notice that the appliance is not working properly during the guarantee period, please contact your retailer or email us, below.

The following are not covered by the guarantee:

- A deformation of the plate can appear when the plate is too hot. This deformation is not permanent it will disappear when the plate is cold and in normal use.
- Normal wear of the product that does not affect operation of the appliance (scratches, impacts, change of color, etc.).
- The presence of rust, cracks, or other deformation of cast iron radiators, not detrimental of Le Griddle utilization.
- Damage caused by abnormal events or use, modification of the product or not following the instructions for use (in particular, the use of chlorine-based cleaning products).
- Damage resulting from professional, industrial or collective use.
- Damage resulting from a fall or impact.

Please do not hesitate to contact us should you have any questions or suggestions at cs@LeGriddleUS.com .

Item	Item No.	Description	Model		
			GF40	GF75	GF105
1	GRIDDLEGFI40	HEAT BOX FOR GFE40(without equipment item 3 to 10)	X		
1	GRIDDLEGFI75	HEAT BOX FOR GFE75(without equipment item 3 to 10)		X	
1	GRIDDLEGFI105	HEAT BOX FOR GFE105(without equipment item 3 to 10)			X
1	GFLID40	LID FOR LE GRIDDLE GFE40 (Included	X		
1	GFLID75	LID FOR LE GRIDDLE GFE75		X	
1	GFLID105	LID FOR LE GRIDDLE GFE105			X
2	GFSSPLATE 40	COOKING PLATE FOR GFE40	X		
2	GFSSPLATE 75	COOKING PLATE FOR GFE75		X	
2	GFSSPLATE 105	COOKING PLATE FOR GFE105			X
3	GF40TANK	GREASE TANK FOR GFE40	X		
3	GF75TANK	GREASE TANK FOR GFE75		X	
3	GF105TANK	GREASE TANK FOR GFE105			X
4	GFBURN9000	BURNER 9000 BTU	X	X	X
5	GFTHERMO	THERMOCOUPLE	X	X	X
6	GFCERAMS	SHORT IGNITING WIRE	X	X	X
6	GFCERAML	LONG IGNITING WIRE		X	X
6	GFCERAMLXL	EXTRA LONG IGNITING WIRE			X
7	GFVALV	GAS VALVE	X	X	X
8	GF40INIT	AA ELECTRONIC IGNITER	X		
8	GF75INIT	AA ELECTRONIC IGNITER		X	
8	GF105INIT	AA ELECTRONIC IGNITER			X
9	GF75KNOB	KNOB	X	X	X
10	GFPIPE40	ADMISSION PIPE FOR GFE40	X		
10	GFPIPE75	ADMISSION PIPE FOR GFE75		X	
10	GFPIPE105	ADMISSION PIPE FOR GFE105			X
11	GFNGORI	ORIFICES FOR NATURAL GAS	X	X	X
11	GFLPGORI	ORIFICES FOR LIQUID PROPAN GAS	X	X	X
12	GFHAND40	HANDLE FOR LID 40	X		
12	GFHAND75	HANDLE FOR LID 75		X	
12	GFHAND105	HANDLE FOR LID 105			X

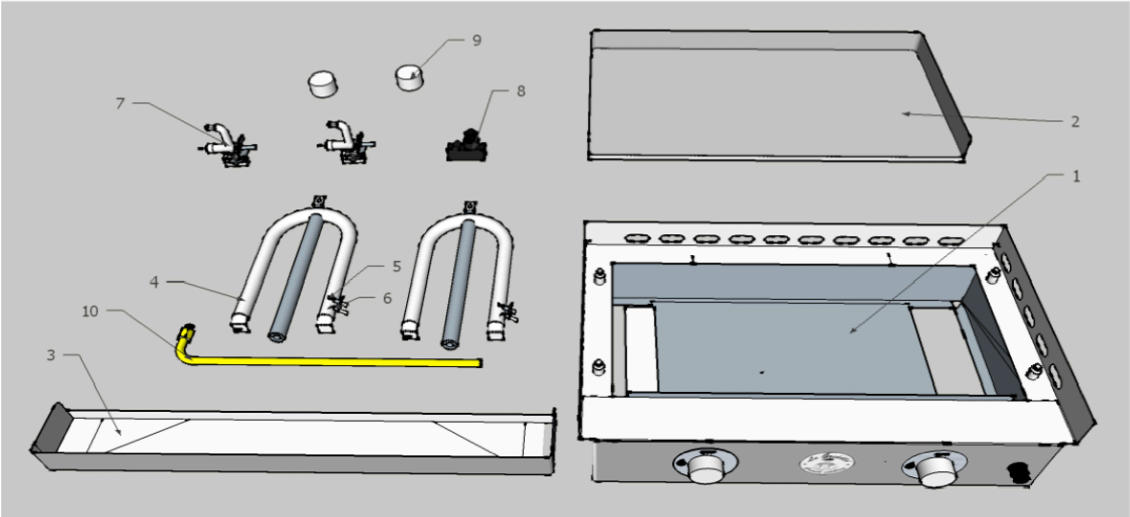

Common parts for the 3 sizes : ITEMS 2,4,5,6,7,8,9

07.20.22