FIREMAGIC®

BUILT-IN ELECTRIC GRILL

EL500i Series

Model w/ dual digital controls and window shown

INSTALLATION INSTRUCTIONS AND OWNER'S MANUAL

INSTALLER: Leave these instructions with consumer.
CONSUMER: Retain for future reference.

IMPORTANT: READ THESE INSTRUCTIONS CAREFULLY BEFORE STARTING INSTALLATION OR USE.

SAFETY AND WARNING CODES

PLEASE READ AND FOLLOW

- Removing permanently affixed rating warning labels **WILL** void the warranty.
- Observe all local codes and ordinances when installing this appliance. If no local codes are applicable, wire unit in accordance with the latest National Electrical Code, ANSI/NFPA 70, or the Canadian Electrical Code, CSA C22.1, whichever is applicable.

⚠ WARNING

When connecting this appliance to a power supply make sure that it is the same voltage as the unit rating. Improper connection may cause severe damage to the components or decrease the performance of your Fire Magic electric grill. A rating plate specifying voltage, hertz, wattage, and amps is attached to the rear of the unit and can be found in the MODEL SPECIFICATIONS section. Also see the IMPORTANT SAFEGUARDS section. To avoid the risk of property damage and/or personal injury, installation work and electrical wiring must be performed by a qualified professional service technician. This appliance must be installed in accordance with this instruction.

Cooking Grid U.S. Patent Nos.
D857,453 D862,984

ONLY TO BE USED OUTDOORS

⚠ WARNING

Improper installation, adjustment, alteration, service, or maintenance can cause injury or property damage. For proper installation, refer to the installation instructions. For assistance or additional information, consult a qualified professional service technician or service agency.

⚠ WARNING

To minimize the risk of property damage and/or personal injury, do not use a flexible extension power-supply cord unless it conforms with the specifications as listed in this manual (see IMPORTANT SAFEGUARDS section).

NOT FOLLOWING THESE INSTRUCTIONS EXACTLY WILL VOID THE MANUFACTURER'S WARRANTY.

Certified to:
ANSI/UL 1026

LC US

FIREMAGIC®

GRIL ÉLECTRIQUE INTÉGRÉ

Série EL500i

INSTRUCTIONS D'INSTALLATION ET MANUEL DU PROPRIÉTAIRE

INSTALLATEUR : Laissez ces instructions avec le consommateur.

CONSOMMATEUR : Maintenez pour la future référence.

Modèle avec commandes numériques doubles et fenêtre illustrée

IMPORTANT: LISEZ CES INSTRUCTIONS SOIGNEUSEMENT AVANT DE COMMENCER L'INSTALLATION OU L'UTILISATION.

SÛRETÉ ET CODES D'AVERTISSEMENT

SVP LISEZ ET SUIVEZ

- L'enlèvement de manière permanente a apposé des avertissements d'étiquette d'estimation videra la garantie.
- Observez tous les codes et ordonnances locaux en installant cet appareil. Si aucun code local n'est applicable, unité de fil selon le plus défunt code électrique national, ANSI/NFPA 70, ou le code électrique canadien, CSA C22.1, celui qui est applicable.

⚠ AVERTISSEMENT

En reliant cet appareil à une alimentation d'énergie assurez-vous que c'est la même tension que l'estimation d'unité. Le raccordement inexact peut endommager considérablement les composants ou diminuer l'exécution de votre gril électrique de Magic du feu. Une plaque signalétique spécifiant la tension, le hertz, la puissance et les ampères est fixée à l'arrière de l'appareil et se trouve dans la section MODEL SPECIFICATIONS. Voir aussi la section IMPORTANT SAFEGUARDS. Pour éviter le risque de dommages aux biens et / ou des blessures, les travaux d'installation et le câblage électrique doit être effectuée par un technicien de service professionnel qualifié. Cet appareil doit être installé selon cette instruction.

Grille de cuisson Numéros de brevets américains:
D857,453 D862,984

À UTILISER UNIQUEMENT À L'EXTÉRIEUR

⚠ AVERTISSEMENT

L'installation inexacte, l'ajustement, le changement, le service, ou l'entretien peuvent causer des dommages ou des dégats matériels. Pour l'installation appropriée, référez-vous aux instructions d'installation. Pour de l'aide ou des renseignements supplémentaires, consulter une agence de technicien de maintenance ou de service professionnel qualifié.

⚠ AVERTISSEMENT

Pour réduire au minimum le risque de dégats matériels et/ou de blessures, n'employez pas une prolongation flexible puissance-fournissent la corde à moins qu'elle se conforme aux caractéristiques comme énuméré en ce manuel (voir la section MISES EN GARDE IMPORTANT).

NON SUIVANT CES INSTRUCTIONS EXACTEMENT VIDERONT LA GARANTIE DU FABRICANT.

Certifié à :
ANSI/UL 1026

LC US

CONTENTS

GETTING STARTED

IMPORTANT SAFEGUARDS 4
GRILL ENCLOSURE 7
ENCLOSURE PARAMETERS 7
ENCLOSURE MATERIALS 9
INSTALLATION REQUIREMENTS 12
OVERHEAD CONSTRUCTION REQUIREMENTS 12
EXHAUST HOOD 12
REAR WALL CLEARANCES 13
SIDE WALL CLEARANCES (if applicable) 13
CORNER WALL CLEARANCES (if applicable) 13
CONTROL PANEL CLEARANCES 14
BELOW UNIT CLEARANCE 14
COOLING AIRFLOW 14
DIAGRAMMATICAL REPRESENTATIONS OF OUTDOOR AREAS 15
ELECTRICAL SAFETY 16
MODEL SPECIFICATIONS 17
EL500i (single digital control models) WIRING DIAGRAM 18
EL500i (dual digital control models) WIRING DIAGRAM 19
ELECTRIC GRILL REPLACEMENT PARTS LIST 20

INSTALLATION

INSTALLATION 22
CONSTRUCT ENCLOSURE 22
INSTALL INSULATING LINER (if applicable) 22
ELECTRICAL SETUP 22
SLIDE UNIT COMPLETELY INTO ENCLOSURE CUTOUT 23
COMMON INSTALLATION 24
INSTALL VAPORIZER PANELS 24
INSTALL ZONE DIVIDER (dual control models) 24
INSTALL COOKING GRIDS 25
INSTALL WARMING RACK 25
INSTALL DRIP TRAY 26
OPERATION TEST 26
USING THE GRILL 27
USING THE ELECTRIC GRILL 27
DIGITAL THERMOMETER / THERMOSTAT 28
SERVICING AND CLEANING 33
CLEANING YOUR ELECTRIC GRILL 33
CONTROL PANEL REMOVAL 35
NOTES PAGE 36
TROUBLESHOOTING 37
WARRANTY 38

IMPORTANT SAFEGUARDS

WARNING!

When using electrical appliances, basic safety precautions must always be followed including the following:

1. **Read all instructions.**
2. This product is for household use.
3. Do not touch hot surfaces. Always use the handle.
4. To protect against electrical shock, do not immerse cord, plugs, meat probe or grill in water or other liquids.
5. Close supervision is necessary when any appliance is used by or near children.
6. Fully disconnect from power source when not in use and before cleaning or servicing. Allow to cool before putting on or taking off parts.

   Note: After use and shut-off of this unit, **DO NOT** immediately disconnect or shut-off the electric supply. The electric fans continue operating to cool the electronics rapidly. Always allow sufficient cooling time prior to disconnecting the electric supply.
7. Do not operate any appliance with a damaged cord, plug, wiring or after the appliance malfunctions or has been damaged in any manner. Contact the nearest authorized service facility for examination, repair or adjustment.
8. The use of accessory attachments not recommended by the appliance manufacturer may cause injuries.
9. Do not place on or near a hot gas or electric burner or in a heated oven.
10. Extreme caution must be used when moving an appliance containing hot oil or other hot liquids.
11. To disconnect, turn controls to OFF, allow time for the unit to cool completely, then shut-off electrical supply or remove plug from outlet as applicable.
12. Do not use appliance for other than intended use.
13. Fuel, such as charcoal briquettes, is not to be used with appliance.
14. **This unit requires a dedicated Ground Fault Circuit Interrupter (GFCI) circuit breaker with the addition of an electrical disconnect, or removeable plug with receptacle (not included). Use only a properly wired and inspected 240VAC (30 AMP minimum, single-phase) GFCI GROUNDED 3-wire circuit breaker, electrical disconnect, or removeable plug with receptacle with this outdoor cooking appliance.** The electrical disconnect, and plug with receptacle MUST be outdoor-rated WEATHER-PROOF and IN-USE COVERED. Only use a properly grounded outlet. Never remove the grounding plug or use with an adapter of 2 prongs. **Installation and equipment must be in compliance with with the National Electric Code and all local codes.**
15. NEVER grill in the open rain or in standing water as this grill is an electric appliance.
16. **FOR YOUR SAFETY, it is recommended to install the unit so that the recommended vent openings and surrounding area of the unit enclosure remain clear and free at all times. See the GRILL ENCLOSURE RECOMMENDATIONS section for details.**
17. Keep the appliance area clear and free from combustible materials, gasoline, and other flammable vapors. **ALL MINIMUM CLEARANCES STATED IN THE INSTALLATION REQUIREMENTS SECTION MUST BE MAINTAINED.**

18. The power to the unit must be made readily accessible to the operator through means of a dedicated 30 AMP single-phase GFCI circuit breaker.
19. **The provisions of the National Electric Code as well as any local codes must be observed when installing the product.**
20. Store products indoors when not in use - out of reach of children (when applicable).
21. **NEVER cover more than 75% of the cooking or grill surface with griddles, pots or pans. Overheating of the electronic components will occur.**
22. This appliance MUST NOT be left in operation when unattended. This appliance is designed as an attended appliance.
23. Use extreme caution when removing drip tray. Only handle the drip tray after the unit has fully cooled down.
24. Do not clean this product with a water spray or the like (see SERVICING AND CLEANING section).

SAVE THESE INSTRUCTIONS

IMPORTANT

IN THE EVENT OF A GREASE FIRE, IMMEDIATELY UNPLUG THE UNIT (OR TURN OFF THE POWER AT THE SOURCE). KEEP THE LID OPEN AND ALLOW THE FIRE TO EXTINGUISH ITSELF. KEEP AT A SAFE DISTANCE. A THOROUGH INSPECTION BY A QUALIFIED PROFESSIONAL SERVICE TECHNICIAN SHOULD BE CONDUCTED BEFORE FUTURE USE OF YOUR UNIT. THE SERVICE TECHNICIAN WILL CHECK ALL ELECTRICAL WIRING FOR DAMAGE. ALL WIRING MUST BE REPAIRED PRIOR TO FUTURE USE.

WARNING:

- DO NOT TOUCH HOT SURFACES.
- TO PREVENT ELECTRIC SHOCK, UNPLUG OR DISCONNECT BEFORE MAINTENANCE OR SERVICE.
- DO NOT IMMERSE IN WATER, DO NOT USE WHEN WET.
- OUTDOOR HOUSEHOLD USE ONLY.
- DO NOT INSTALL CLOSER THAN 8" TO A VERTICAL SURFACE.
- DO NOT INSTALL UNDER UNPROTECTED OVERHEAD COMBUSTIBLE CONSTRUCTION.
- DO NOT INSTALL IN COMBUSTIBLE ENCLOSURE WITHOUT INSULATION LINER.

CAUTION:

HOT SURFACES WHEN IN USE!

REMOVE PROTECTIVE COVERING FROM ALL EXTERIOR SURFACES PRIOR TO USING. ALL SURFACES MAY BE CLEANED WITH STAINLESS STEEL CLEANER.

FOR SUPPLY CONNECTIONS, USE 10AWG OR LARGER WIRES SUITABLE FOR AT LEAST 105° C (200° F)

GRILL ENCLOSURE

For general guidelines regarding custom-built enclosures, see below.

To ensure proper operation and safety, the enclosure MUST comply with the following:

- Proper construction and cutout openings - see INSTALLATION REQUIREMENTS and ENCLOSURE PARAMETERS sections.
- Proper clearances - see INSTALLATION REQUIREMENTS section.

You MUST read and follow these sections for complete enclosure requirement details.

ENCLOSURE PARAMETERS

General Guidelines

The enclosure can be constructed according to your individual preference, while following all guidelines found in this manual. **The enclosure MUST (see Fig. 7-1):**

- be installed on a hard and level surface
- have ventilation (see Ventilation Recommendations section)
- have a countertop that is non-combustible (enclosure may be combustible construction with proper provision*)
- have the minimum dimensions specified in Fig. 7-1
- have the minimum cutout dimensions (see CUTOUT DIMENSIONS section)
- be setup so that it can safely connect and disconnect to/from a properly wired and inspected **240VAC (30 AMP minimum, single-phase) GROUNDED three-wire dedicated GFCI circuit breaker with an in-line electrical disconnect or removable plug with receptacle**
- have access to the interior for ease of installation and service
- be setup so the unit is as close to the vent openings as possible
- be designed so that the grill is supported by the stainless-steel hanger extending from the upper portion of the unit (rests on left, right, and back of countertop), and the control panel sits flush against the enclosure front wall - see Cutout Dimensions, Countertop Overhang, and Substrate sections
- have drainage cutouts (if needed) to prevent the accumulation of water within the enclosure
- meet all requirements found in Fig. 7-1 and the following sections

*** When installing in a combustible enclosure, an approved insulating liner MUST be used. Reference Table 3 in the MODEL SPECIFICATIONS section for liner model #.**

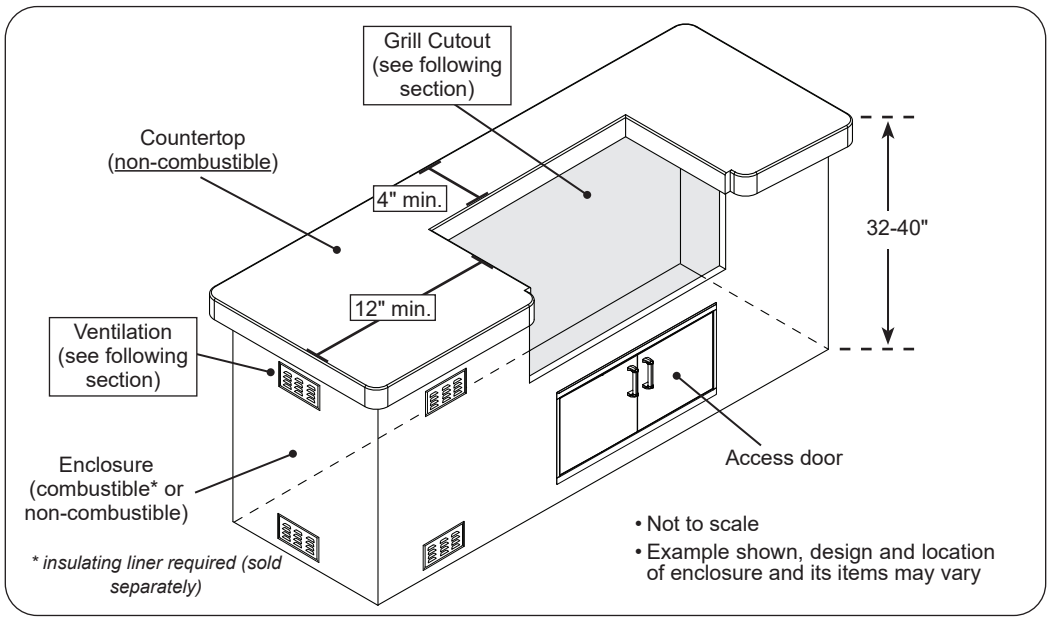

Fig. 7-1 Enclosure specifications

Ventilation Recommendations

FOR YOUR SAFETY, it is recommended to provide the openings for replacement air and ventilation of the enclosure (to prevent overheating).

2 (minimum) ventilation openings should be created (reference Fig. 8-1 and Fig. 8-2):

- **Each opening should have a minimum of 10 sq. in. of free area. The openings should be equally sized. (Total of 20 sq. in. free area.)**
- **The openings should remain unobstructed:**

  The clearance between the openings and any items outside of the enclosure is a minimum of 6". The clearance between the openings and any items within the enclosure is a minimum of 2". See Fig. 8-2.

- Refer to national and local codes for additional specifications of openings.

It is acceptable to use RHP venting panels (PN 5510-01). Contact your dealer.

Note: These same guidelines apply when multiple appliances exist in the enclosure.

KEEP THE VENT OPENINGS AND SURROUNDING AREA OF THE ENCLOSURE CLEAR AND FREE AT ALL TIMES.

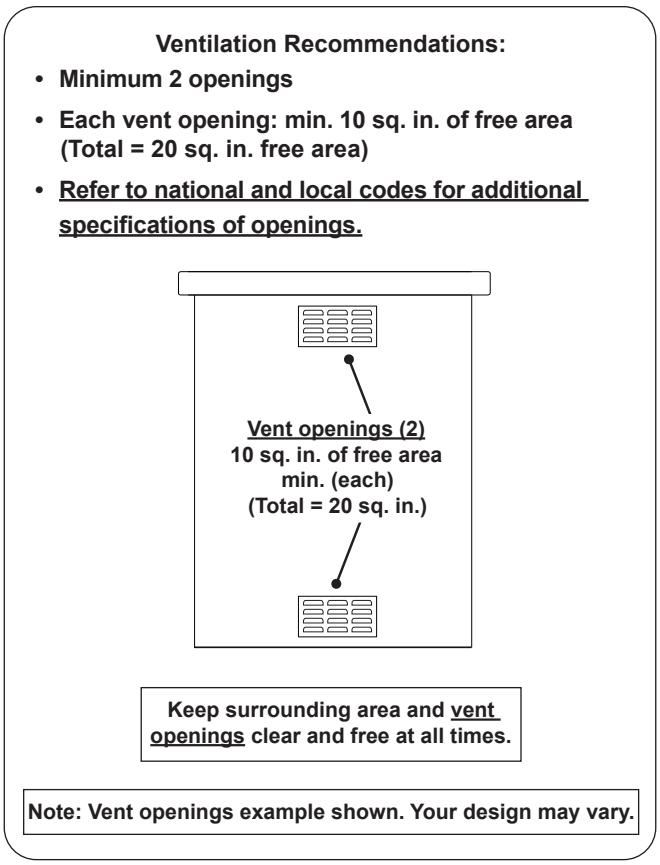

Fig. 8-1 Ventilation detail

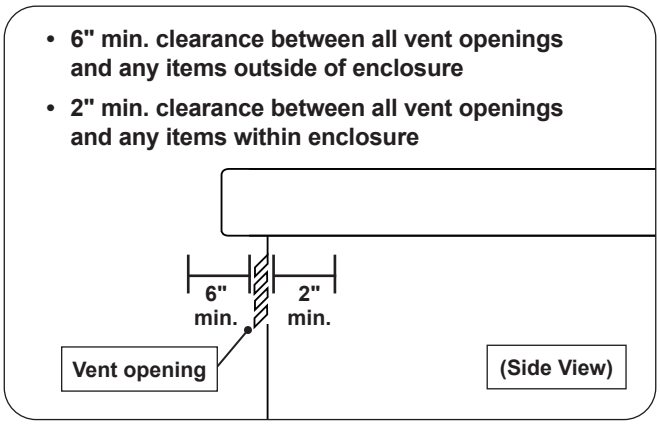

Fig. 8-2 Vent openings clearance

ENCLOSURE MATERIALS

The countertop and supporting materials MUST be constructed of non-combustible materials.

The enclosure can be constructed of non-combustible materials. Combustible materials are permitted with the use of an insulating liner (see Table 3).

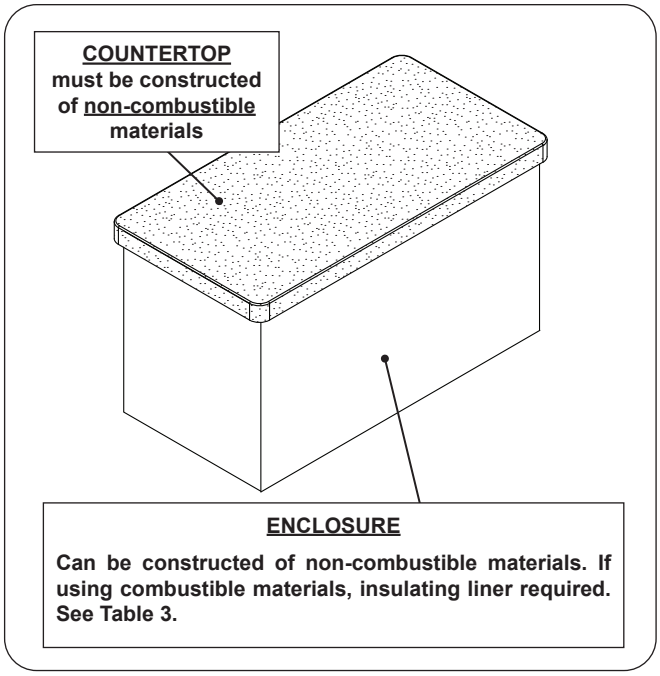

Fig. 9-1 Enclosure detail

Cutout Dimensions

Important: These cutout dimensions below are for non-combustible enclosures. If installing this grill in a combustible enclosure, the correct insulating liner must be used (and the cutout dimensions will differ). See Table 3. Refer to the instructions supplied with the liner for the correct cutout dimensions.

Description	EL500i
A Countertop to unit bottom **cutout**	7 1/4"
B Side to side **cutout**	33"
C Front to back **cutout** *	17 1/2"
D Trim flange width **cutout** †	35 1/2"

* Includes any substrate at front wall of enclosure (in the area the trim flange [of the control panel] is to sit flush against). See SUBSTRATE section on next page.

† Only applicable for enclosures that have countertops with an overhang (see illustration and section below).

Table 1 - Cutout Dimensions

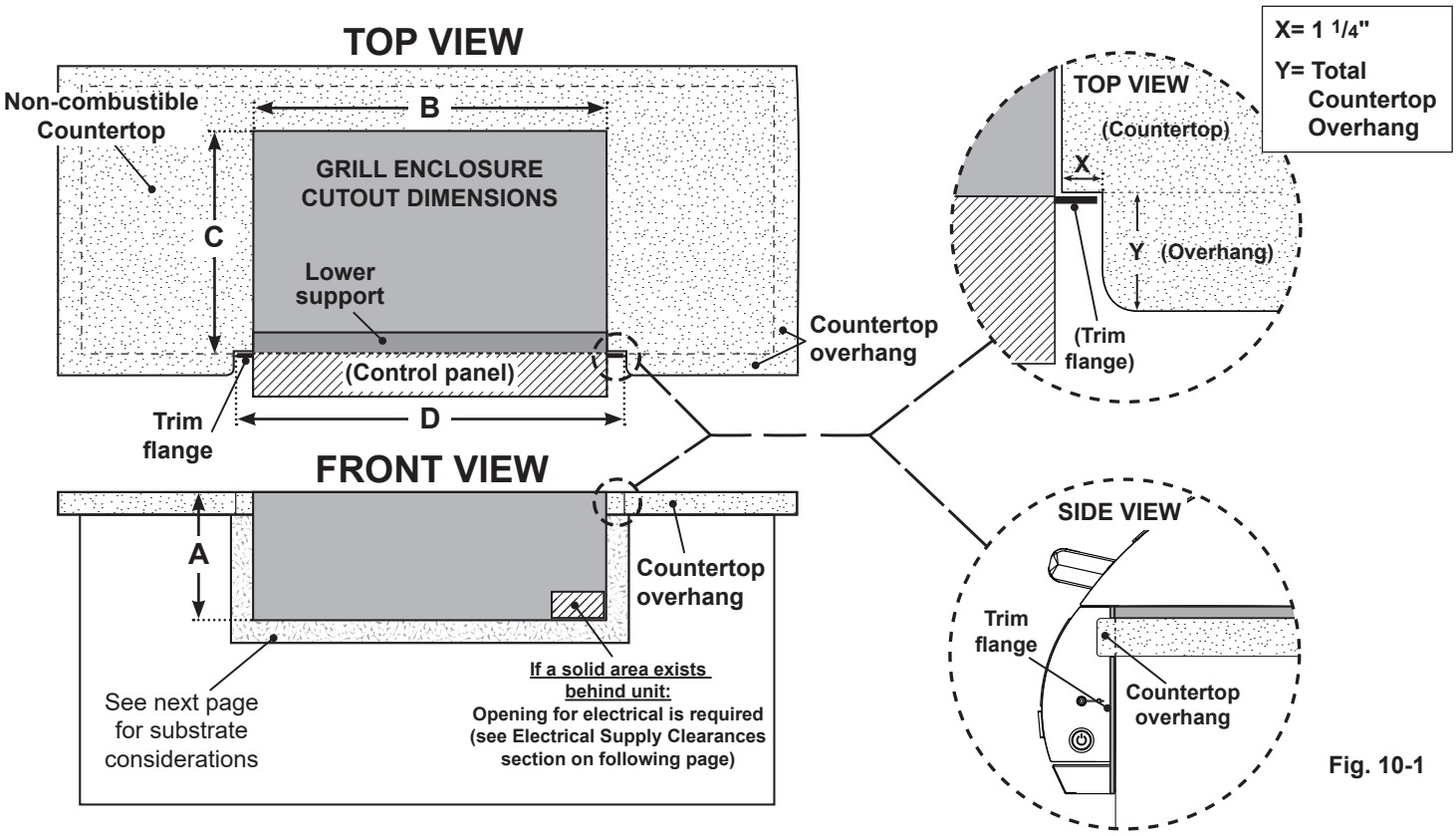

Fig. 10-1

Countertop Overhang

The control panel is designed to sit flush against the enclosure front wall. If the countertop extends beyond the front wall, creating a countertop overhang, it must be cut flush with the front wall for the width of the control panel (and trim flange) or a gap will be created exposing the forward portions of the left and right side grill liner walls. See illustrations in Fig. 10-1 above for the correct setup, and Fig. 10-2 for an incorrect setup.

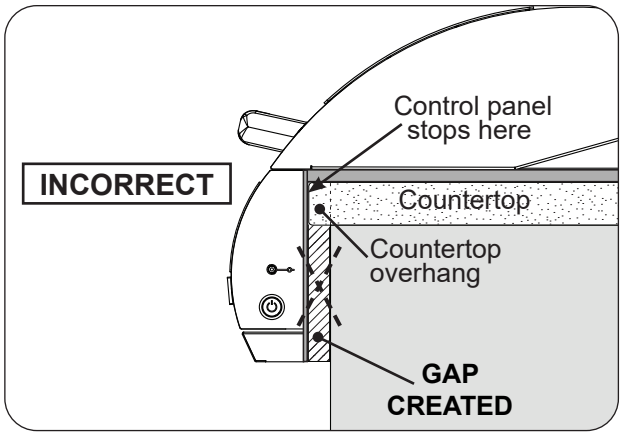

Fig. 10-2

Substrate

When adding any substrate to the enclosure front wall (including tiles, stone, etc.), consider the following:

Substrate Behind Trim Flange

Substrate + countertop "front to back" cutout must equate to **Dim. C** (see previous page) when the substrate sits flush behind the trim flange (of the control panel).

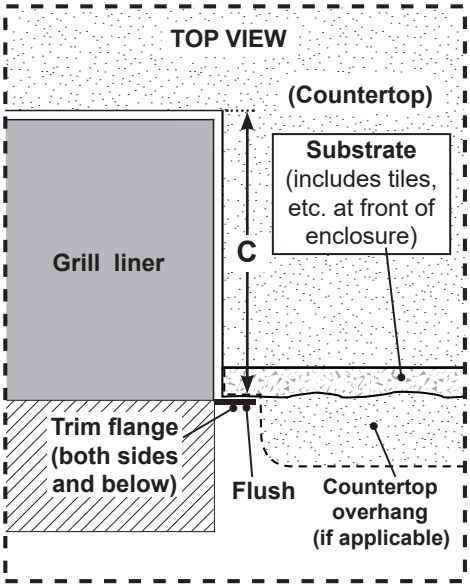

Fig. 11-1

Substrate Alongside Trim Flange

Any additional substrate alongside the trim flange (of the control panel) does not need to be considered in **Dim. C** (see previous page).

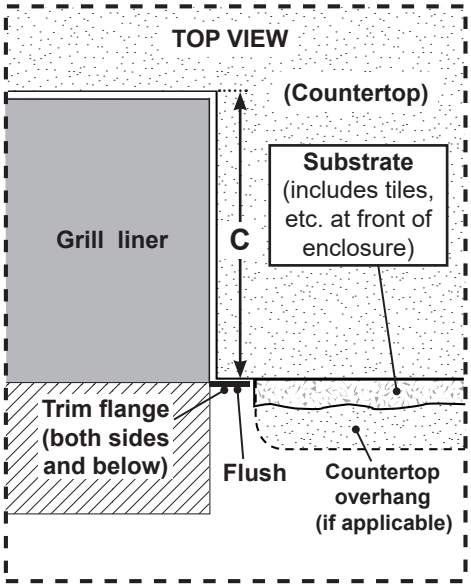

Fig. 11-2

Electrical Supply Clearances (if applicable)

If the enclosure cutout is framed or a solid area exists behind the grill, the rear wall of the framing MUST have a cutout for the electrical supply. See Fig. 11-3.

Note: The junction box features a side and rear knockout. The rear knockout must be used for this type of setup.

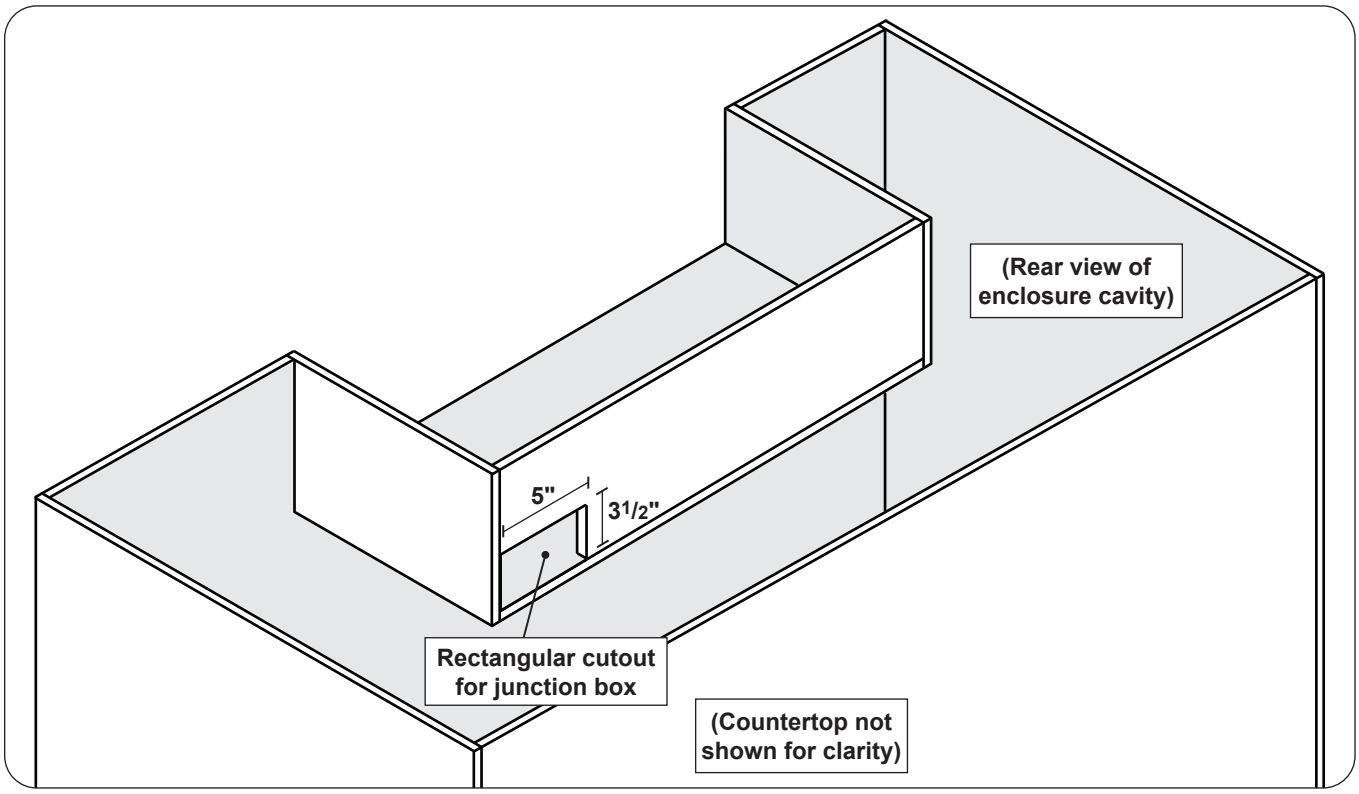

Fig. 11-3 Junction box cutout

Installation must be performed by a qualified professional service technician.

Any constructed outdoor area in which the appliance is used shall comply with one of the following:

- An outdoor area with walls on three sides, and no overhead cover
- Within a partial outdoor area that includes an overhead cover and no more than two walls. The sidewalls may be parallel, as in a breezeway, or at right angles to each other
- Within a partial outdoor area that includes an overhead cover with walls on three sides, and at least 30% or more of the horizontal periphery of the enclosure that is open and unrestricted

Note: All openings must be permanently open.

Note: Sliding doors, garage doors, windows, or screened openings are not considered as permanent openings.

Refer to DIAGRAMMATICAL REPRESENTATIONS OF OUTDOOR AREAS section.

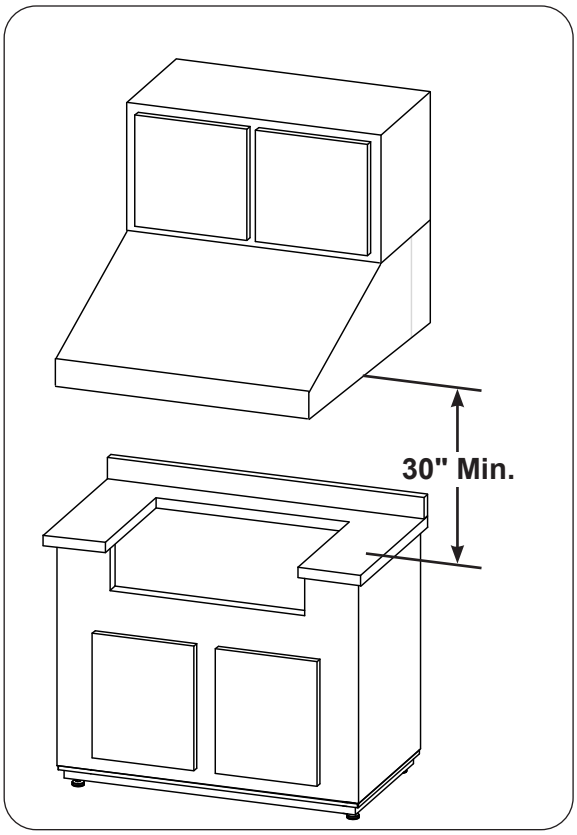

Fig. 12-1 Overhead requirements

OVERHEAD CONSTRUCTION REQUIREMENTS

- When installed under combustible overhead construction, the area above the cooking surface **must** be covered with an exhaust hood.
- A minimum clearance of 30" (Fig. 12-2) is required between the countertop and the vent hood. Any overhead construction must be directly above the vent hood. Construction extending to the left or right of the vent hood is not permitted.
- See EXHAUST HOOD section below for more details and consult the instructions provided with the vent hood for additional requirements.

EXHAUST HOOD

The exhaust hood provides protection for the overhead construction.

When installed under overhead non-combustible construction, an exhaust hood is highly recommended.

When using an exhaust hood, the area above the cooking surface of the grill must be covered with a hood larger than the cooking area of the grill, and with a minimum of 1200 CFM (cubic feet per minute) rated exhaust fan for proper outdoor application.

Fire Magic vent hoods, spacers, and duct covers are available. They meet all requirements. See Table 3 in the MODEL SPECIFICATIONS section. Contact your local dealer.

For custom spacers, they must be constructed entirely of non-combustible material only.

For custom soffits, they may be constructed of wood, metal framing, etc.

REAR WALL CLEARANCES

The unit must have a minimum clearance of 8" from the rear wall (see Fig. 13-1).

(To allow for proper ventilation and prevent dangerous overheating.)

BACKSPLASH CLEARANCE (if applicable)

If a backsplash exists, it must be non-combustible and have a minimum 4" clearance from the rear of the unit (to allow for proper ventilation and prevent dangerous overheating). See Fig. 13-2.

SIDE WALL CLEARANCES (if applicable)

The unit must have a minimum clearance of 8" from any side walls. See Fig. 13-3.

CORNER WALL CLEARANCES (if applicable)

The unit must have a minimum clearance of 24" from any side walls (to account for variables in airflow that could affect performance). See Fig. 13-4.

Clearances continued on following page

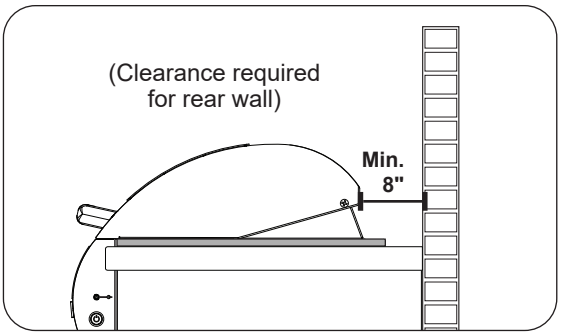

Fig. 13-1 Clearance **'A'** Diagram

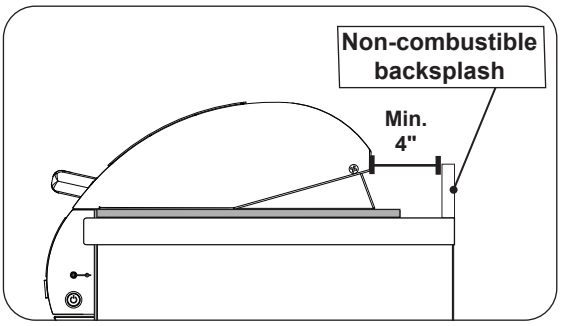

Fig. 13-2 Backsplash clearance

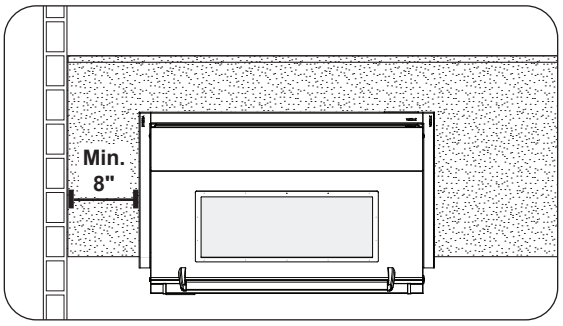

Fig. 13-3 Side wall clearance

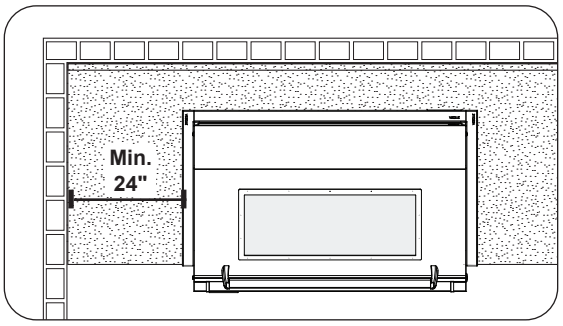

Fig. 13-4 Corner wall clearance

CONTROL PANEL CLEARANCES

- The control panel **MUST** have a minimum side clearance of 6" from any obstructions/side walls. See Fig. 14-1.

  (To allow for control panel removal, access to the thermometer power switch, and access to meat probe jack[s].)

- The control panel **MUST** remain removable for servicing (see CONTROL PANEL REMOVAL section). Any adjacent countertops must not obstruct the panel from being removed.

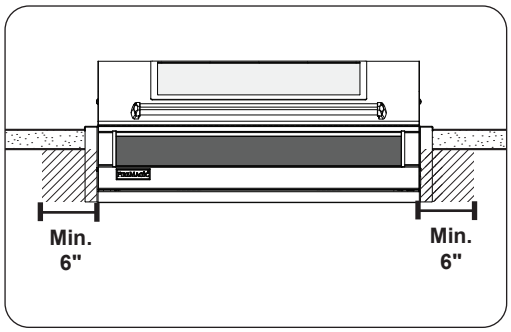

Fig. 14-1 Control panel clearances

BELOW UNIT CLEARANCE

A minimum 2" clearance is required beneath the bottom of the unit to ensure proper operation and ventilation.

COOLING AIRFLOW

Proper airflow (front-to-back, Fig. 14-2) MUST be maintained for the unit to perform as it was designed. If airflow is blocked, overheating will result. Do not block the 1" front air inlet along the bottom of the control panel.

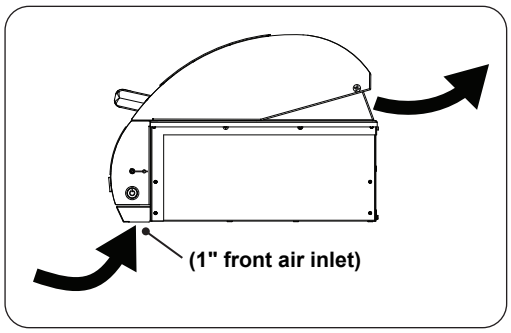

Fig. 14-2 Airflow diagram

CAUTION: Install the grill so that the prevailing wind blows toward the front of the grill (Fig. 14-3). Wind blowing into or across the rear oven lid vent (Fig. 14-4) can cause poor performance and/or dangerous overheating.

Fig. 14-3 Airflow direction - CORRECT

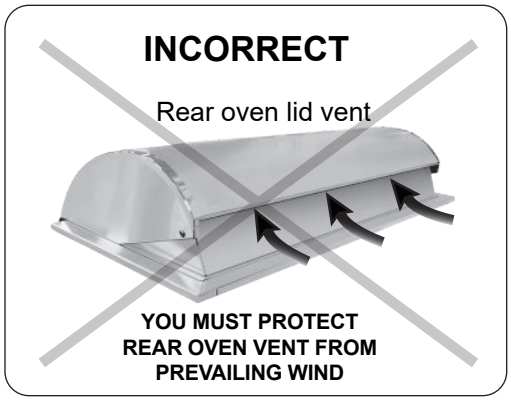

Fig. 14-4 Airflow direction - INCORRECT

DIAGRAMMATICAL REPRESENTATIONS OF OUTDOOR AREAS

The following figures are diagrammatical representations of outdoor areas. See INSTALLATION REQUIREMENTS section.

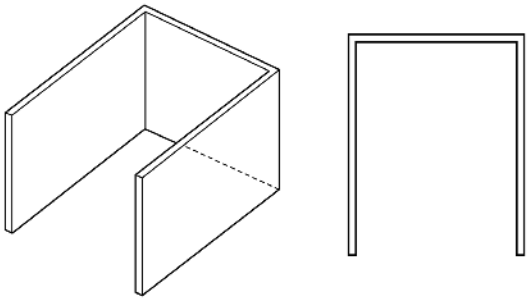

Fig. 15-1 Outdoor area - Example 1

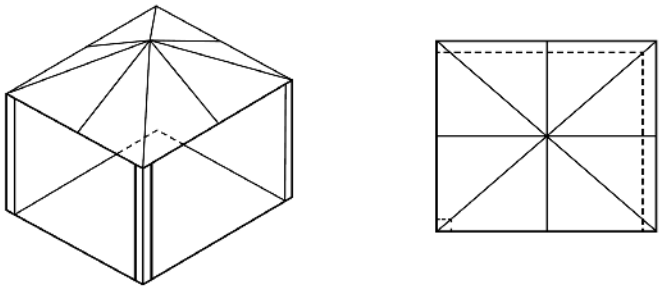

Fig. 15-2 Outdoor area - Example 2

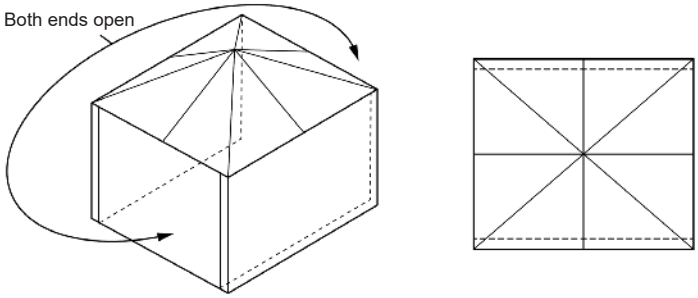

Fig. 15-3 Outdoor area - Example 3

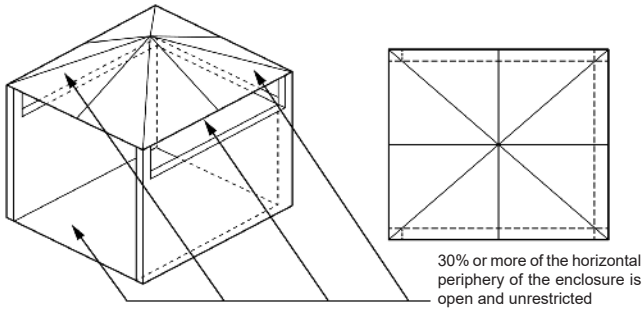

Fig. 15-4 Outdoor area - Example 4

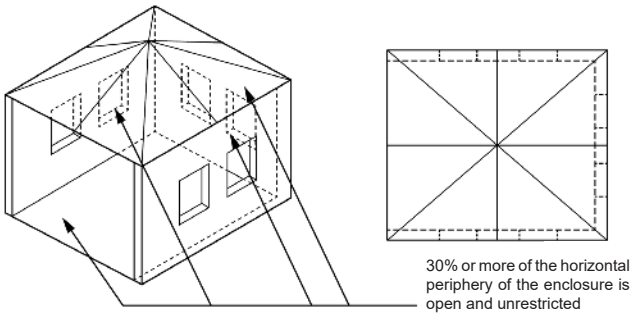

Fig. 15-5 Outdoor area - Example 5

ELECTRICAL SAFETY

- To protect against electric shock, do not immerse electrical wires, cord or plugs (as applicable) in water or other liquid.
- Disconnect the unit from power source when not in use and before cleaning. Allow to cool before putting on or taking off parts.
- Do not operate any outdoor cooking appliance with damaged wiring, or after the appliance malfunctions or has been damaged in any manner. Contact the manufacturer for repair.
- Do not use an outdoor cooking appliance for purposes other than intended.
- **Use only a properly wired and inspected 240VAC (30 AMP minimum, single-phase) GROUNDED three-wire dedicated Ground Fault Circuit Interrupter (GFCI) circuit breaker *with the addition of* an in-line electrical disconnect OR removable plug with outlet with this outdoor cooking appliance. The electrical disconnect, and plug with receptacle MUST be outdoor-rated WEATHER-PROOF and IN-USE COVERED.**
- **Use only a GFCI circuit breaker rated for 30 AMPS with this outdoor cooking appliance.**
- **Use only 10AWG (or larger) wires suitable for at least 200° F (105° C).**
- **The provisions of the National Electric Code as well as any local codes must be observed when installing the product.**

MODEL SPECIFICATIONS

The unit rating label is located behind the unit. The unit serial number is located:

- on the underside of the drip tray handle (on a thermal label). It is recommended that the drip tray first be removed and cleaned / emptied of its contents, then turned over to view.
- affixed to the grill body behind the control panel (on an aluminum tag)
- on the unit rating label located behind the unit

EL500i Series	Input electrical requirements	240VAC / 30 AMP minimum / single-phase / 60 Hz / GFCI circuit breaker
	Appliance rating	240VAC / 6,000 watts / 25 AMP / 60 Hz

Table 2 - Product Specifications

	EL500i
Electric grill insulating liner model # * †	3178-52
Fire Magic vent hood model # *	36-VH-7 ‡
Fire Magic vent hood spacer model # *	36-VH-7-02 ‡
Fire Magic vent hood duct cover model # *	36-VH-7-DC ‡

* If applicable, not included
† If installing this grill in a combustible enclosure, the correct insulating liner must be used. Consult liner instructions for counter cutout dimensions and installation.
‡ This model meets the minimum requirements; larger models are also acceptable.

Table 3 - Grill Supporting Products

	Height		**Width**	**Depth**
	Bottom of flange to top		(Left to right)	(Front to back)
	With oven lid OPEN **(A)**	With oven lid CLOSED **(B)**	Maximum width **(C)**	Maximum depth **(D)**
EL500i	28"	14 1/8"	35"	23 3/4"

Table 4 - Grill Dimensions

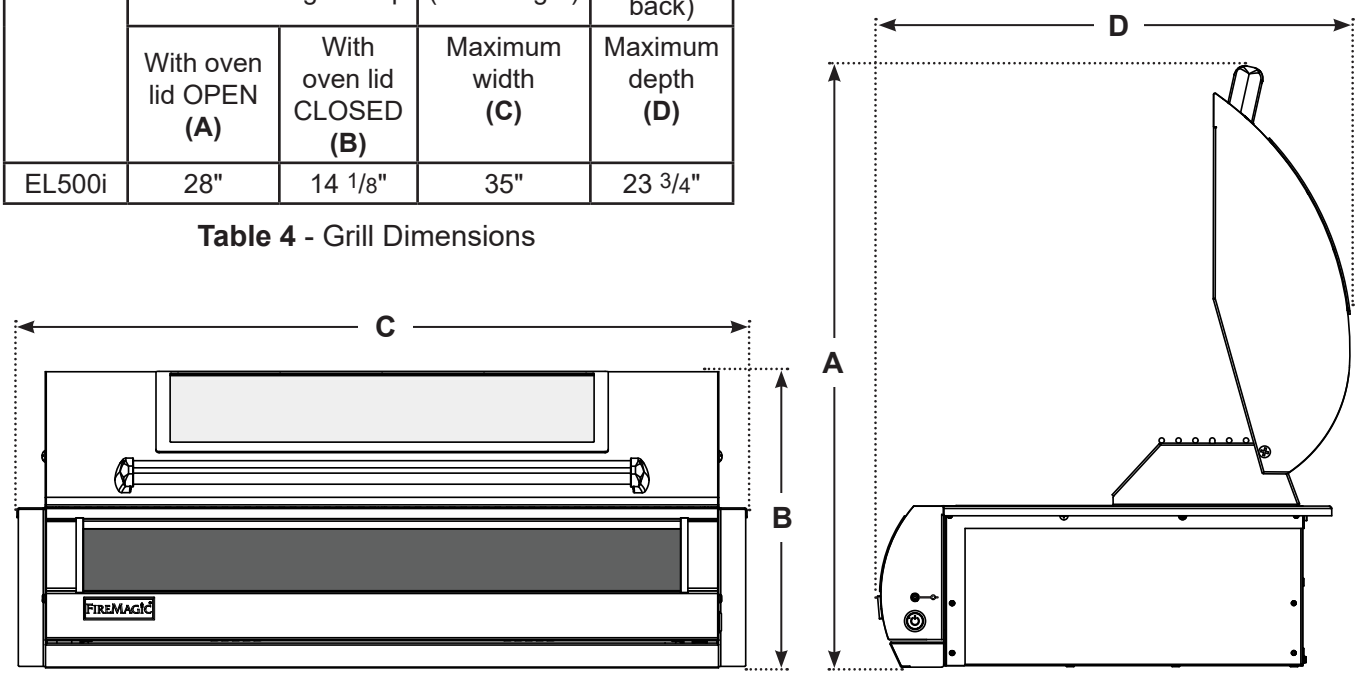

Fig. 17-1

EL500i (single digital control models) WIRING DIAGRAM

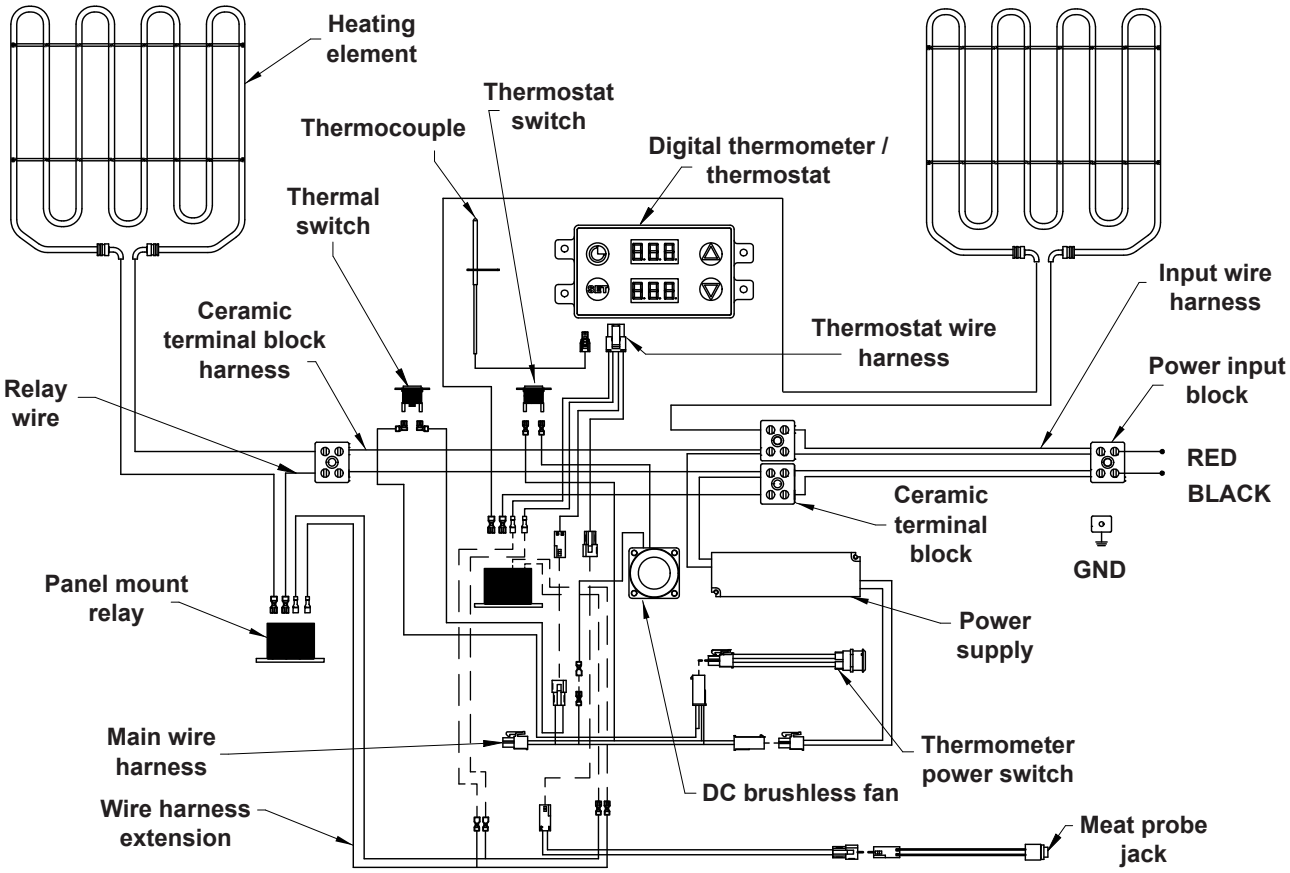

Fig. 18-1

Note: In addition, a wire diagram can be found affixed to the inside of the control panel.

EL500i (dual digital control models) WIRING DIAGRAM

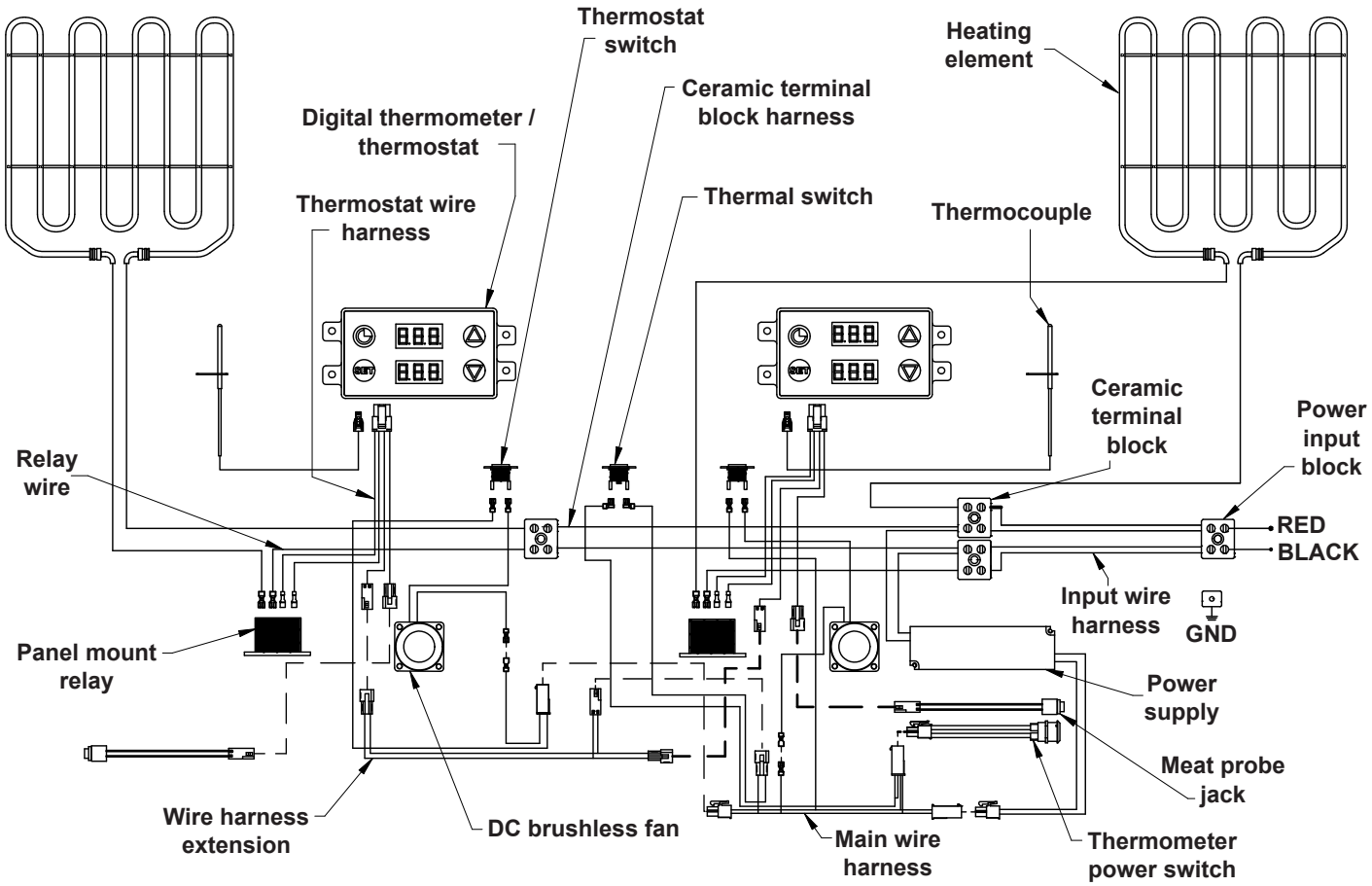

Fig. 19-1

Note: In addition, a wire diagram can be found affixed to the inside of the control panel.

ELECTRIC GRILL REPLACEMENT PARTS LIST

IMPORTANT

Remove all packing material and discard prior to use.

Replacement parts can be ordered from your local Fire Magic dealer.

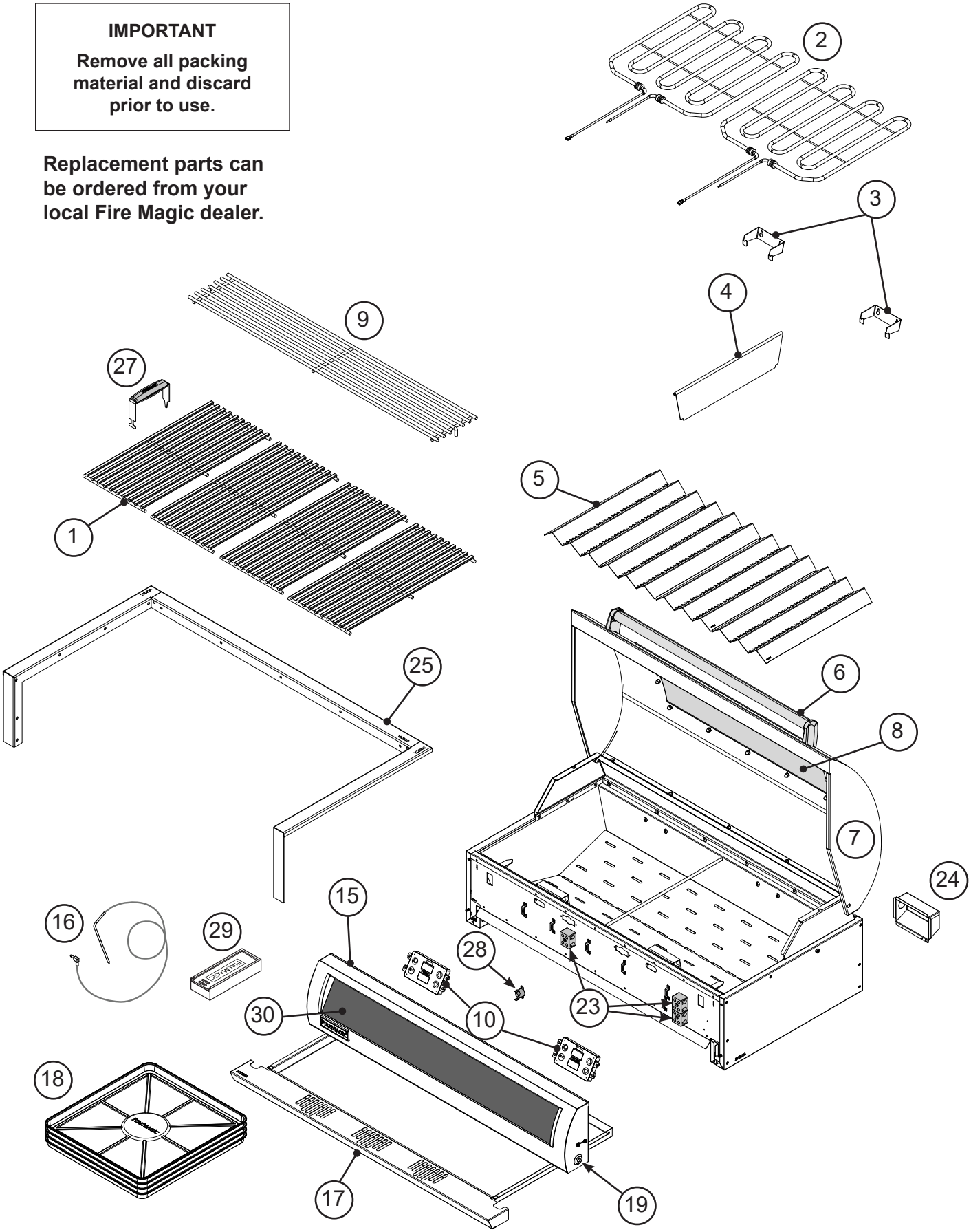

ELECTRIC GRILL REPLACEMENT PARTS LIST (cont.)

Item	Description	EL500i Part No.	Qty.
1.	Stainless cooking grid (set of 2)	3555-DS-2	2
2.	Heating element	23116-01	2
3.	Heating element rear support bracket	23115-52	2
4.	Zone divider *	23116-02	1
5.	Vaporizer panel (set of 2 or 4)	3066-S-4	1
6.	Handle assy.	23116-03	1
7.	Oven lid w/ window	23116-04	1
or	Oven lid w/o window	23116-12	1
8.	Window glass w/ gasket	23116-10	1
9.	Warming rack	3681	1
10.	Digital thermometer / thermostat	23115-55	1 or 2▲
11.	Digital thermometer / thermostat wire harness †	23115-56	1 or 2▲
12.	Complete raceway w/ electronics (single control model) †	23116-13	1
or	Complete raceway w/ electronics (dual control model) †	23116-05	1
13.	Main harness †	23116-06	1
14.	Harness extension †	23116-07	1
15.	Control panel w/ raceway & electronics (single control model)	23116-14	1
or	Control panel w/ raceway & electronics (dual control model)	23116-08	1
16.	Meat probe	24187-21	1
17.	Drip tray	3095	1
18.	Drip tray liners (set of 4)	3558	1
19.	Thermometer power switch	24195-16	1
20.	Fan †	23115-15	1 or 2▲
21.	Relay †	23115-16	2
22.	Power supply †	24187-66	1
23.	Ceramic terminal block	24187-69	4
24.	Junction box	24187-70	1
25.	Hanger frame	23116-09	1
26.	Protective cover † ‡	3662F	1
27.	Grid lifter	3519H	1
28.	Thermal switch	23116-11	1
29.	Meat probe bamboo storage box	24187-21-SB	1
30.	Glass panel assy. w/ plate	23116-15	1

* If equipped
† Not shown
‡ Optional accessory
▲ Single control model: qty 1, dual control model: qty 2

It is not required to remove the control panel to install this unit.
DO NOT lift the unit from the control panel when installing.

CONSTRUCT ENCLOSURE

Construct the enclosure according to your individual install preference, while following the guidelines found in the GRILL ENCLOSURE and INSTALLATION REQUIREMENTS sections.

- Construct the enclosure in an appropriate location (ensure all requirements of this manual and all local codes are met when determining location).
- **Follow all information regarding enclosure parameters, ventilation, drainage, cutout dimensions, and clearances listed in the GRILL ENCLOSURE and INSTALLATION REQUIREMENTS sections.** Failure to do so will prevent proper operation and can cause dangerous overheating.

INSTALL INSULATING LINER (if applicable)

If installing your unit in a combustible enclosure, the correct insulating liner must be used (see Table 3 of the MODEL SPECIFICATIONS section). Refer to the instructions supplied with the liner for installation.

ELECTRICAL SETUP

All electrical setup of this unit MUST be performed by a licensed electrician.

THIS UNIT IS DESIGNED TO BE HARD WIRED DIRECTLY TO THE UNIT AND IS TO BE POWERED BY A DEDICATED GFCI CIRCUIT BREAKER. The circuit breaker MUST be rated for 240VAC / 30 AMP minimum / 60Hz.

- **The external wiring source should be a flexible conduit or an approved flexible cable suitable for this installation, and is of proper size to carry the load (10AWG or larger, suitable for 200° F [105° C]).**
- **The appliance must be installed *with the addition of* an independent electrical disconnect OR removable plug with outlet that is easily accessible. The electrical disconnect or plug configuration must be installed in-line between the unit and circuit breaker. The disconnect or plug configuration must be rated to properly carry the load. See Table 2 in the MODEL SPECIFICATIONS section, IMPORTANT SAFEGUARDS section and the ELECTRICAL SAFETY section for all requirements.**
- **The unit must be easily removable and disconnected for future maintenance and servicing.**

CAUTION: Installation MUST be performed by a qualified professional service technician. **Observe the National Electric Code and all local codes.**

CAUTION: THE GRILL IS HEAVY AND REQUIRES TWO OR MORE PEOPLE FOR SAFE HANDLING.

1. Slide the unit approximately halfway (or more) into the enclosure cutout so that the unit is resting safely while providing space to access the unit's rear junction box. See Fig. 22-2. (If the enclosure has a solid area behind the unit, an opening for the electrical is required. Reference the Electrical System Clearances section under the GRILL ENCLOSURE section.)

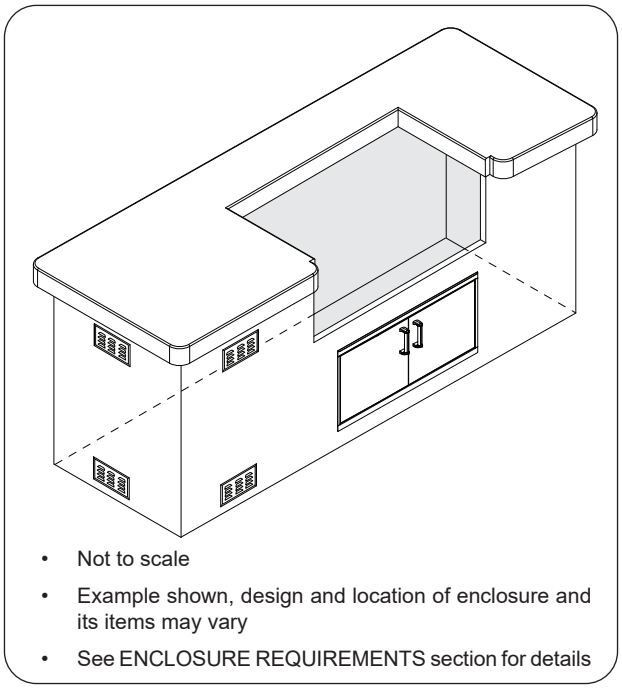

Fig. 22-1 Enclosure construction overview

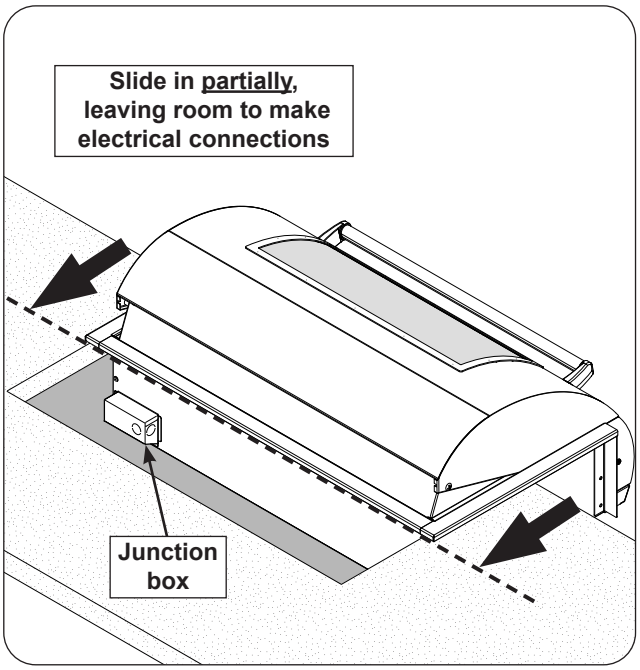

Fig. 22-2 Position unit for wiring

2. Remove the junction box located on the rear of the unit. Select and remove a knockout from the junction box that will best suit your electrical setup. Route the wiring through the selected knockout opening. See Fig. 23-1.

Note: If the enclosure has a solid area behind the unit, or if using an insulating liner, only the rear facing knockout on the junction box can be used.

Note: Adding a non-metallic strain relief bushing to the opening is recommended (not included).

3. Connect the wires to the ceramic terminal block. Reference the wiring information below and Fig. 23-2.

   Black: Connect to L (hot) - bottom portion of ceramic terminal block

   Red: Connect to N (hot) - top portion of ceramic terminal block

   Green: Connect to GND (ground) - aluminum grounding lug

4. Ensure all wire connections are fully secure, switch ON the electrical system and test the power to the unit.

5. Secure the junction box back onto the grill.

SLIDE UNIT COMPLETELY INTO ENCLOSURE CUTOUT

Shut off the power to the unit, then carefully slide the unit completely into the enclosure cutout.

- Ensure the junction box and all electrical wires are clear, undamaged, and completely inserted into the opening, and that the unit is correctly inserted without any obstructions between it and the countertop.
- Ensure the unit fully slides in so that the control panel sits flush against the enclosure front wall. See the COUNTERTOP OVERHANG section in ENCLOSURE REQUIREMENTS for details. See Fig. 23-3.
- If installing on a countertop with an irregular/textured surface, a bead of silicone sealer rated for 400° F (204° C) or higher is recommended to protect from the elements.

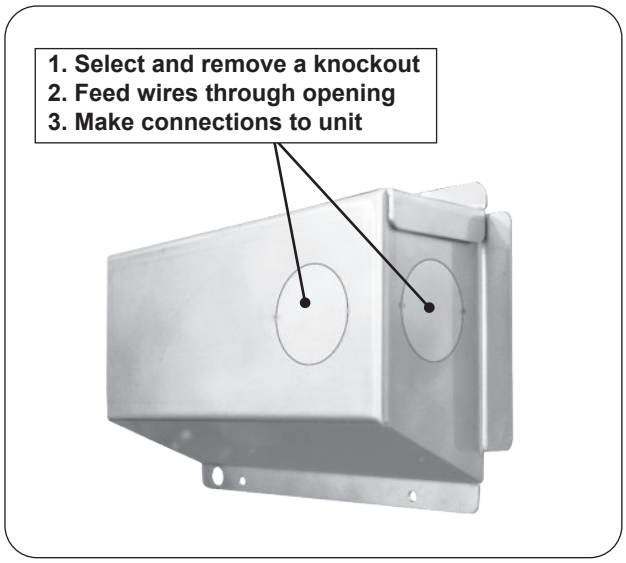

Fig. 23-1 Junction box knockouts

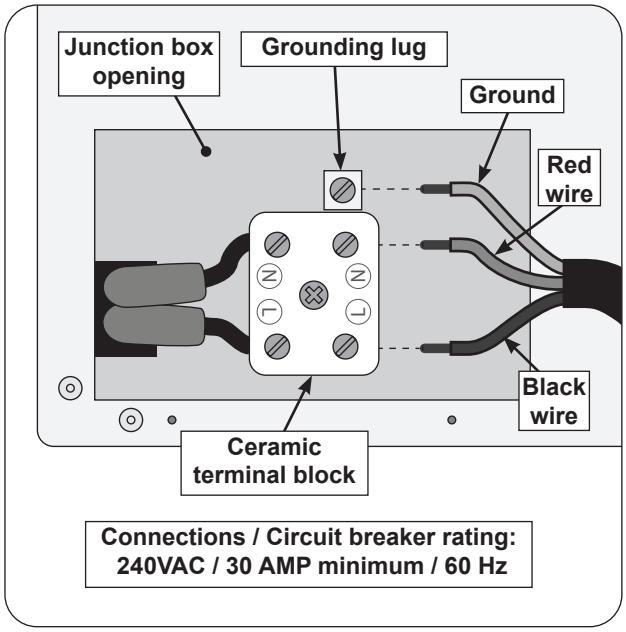

Fig. 23-2 Wire connection diagram

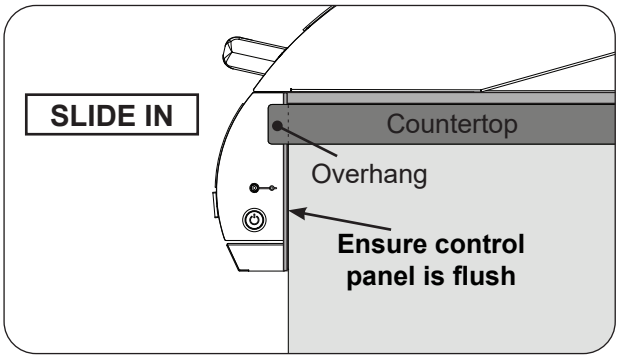

Fig. 23-3 Slide in unit (ensure flush)

INSTALL VAPORIZER PANELS

1. Pull and swing the heating element(s) to the "up position" by lifting the rear-end of the element up and away from the rear support bracket.
2. Locate the rear heating element support bracket and slightly loosen the two screws. Detach and remove the bracket by sliding it upward. See Fig. 24-1.

Note: It is only necessary to remove one support bracket to give clearance for vaporizer installation.

3. With the support bracket removed, carefully place the vaporizer panels down into the electric grill as shown in Fig. 24-2.
4. Reinstall the rear support bracket.

INSTALL ZONE DIVIDER (dual control models)

Locate the zone divider and carefully hook it over the center wire rod as shown in Fig. 24-3.

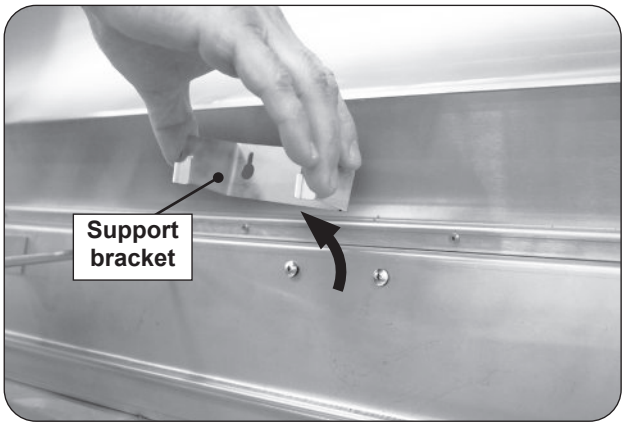

Fig. 24-1 Remove element support bracket

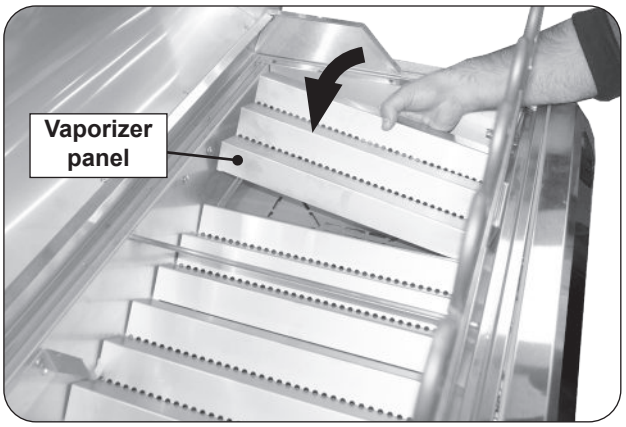

Fig. 24-2 Install vaporizer panels

Fig. 24-3 Install zone divider

INSTALL COOKING GRIDS

Note: Wear heat-resistant gloves if necessary.
Note: Do not leave the lifter on any hot surfaces.

1. With the prongs facing downward, insert the notched-end of the lifter between two grid rods, then rotate, as shown in Fig. 25-1, A & B.

Note: To balance, insert the notched-end of the lifter in the middle front half of the cooking grid.

2. Insert the rear pointed-end of the lifter between the same two rods (Fig. 25-1, B) and carefully lift the cooking grid and place onto the front and rear grid rests of the grill (see Fig. 25-2). Repeat for all other cooking grids.

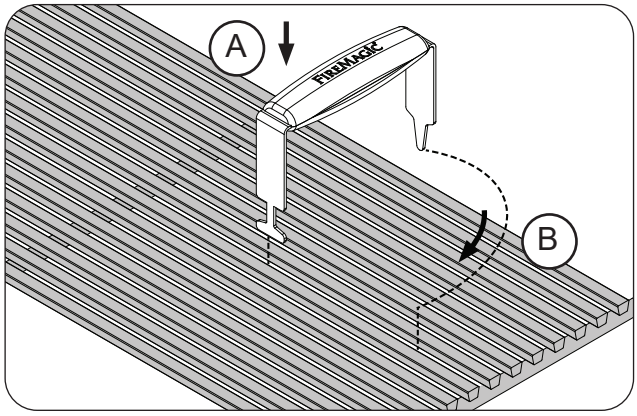

Fig. 25-1 Install cooking grids

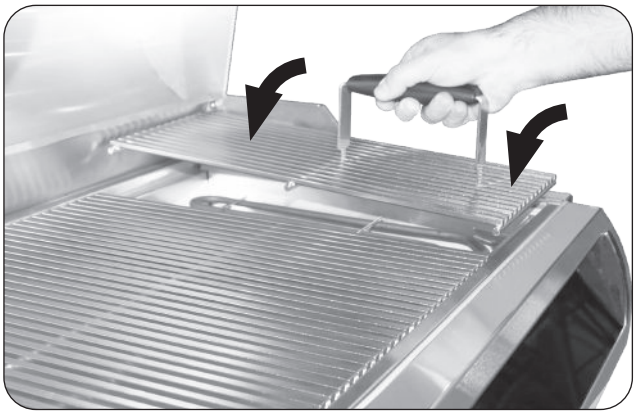

Fig. 25-2 Install cooking grids

INSTALL WARMING RACK

Install the warming rack by carefully inserting the two feet through the holes found on the raised walls of the unit (see Fig. 25-3).

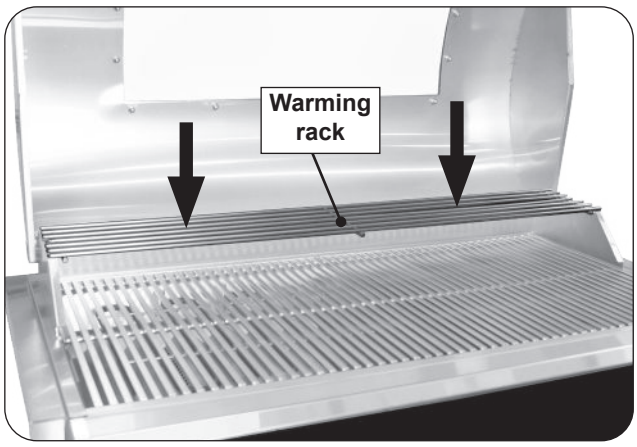

Fig. 25-3 Install warming rack

INSTALL DRIP TRAY

Your grill includes drip tray liners (4 pcs). Place two liners into the drip tray (Fig. 26-1, A), then fully insert the drip tray assembly into the bottom front opening of the electric grill (Fig. 26-1, B).

Note: For easiest drip tray installation, insert the tray in an upward angle to clear the bearings.

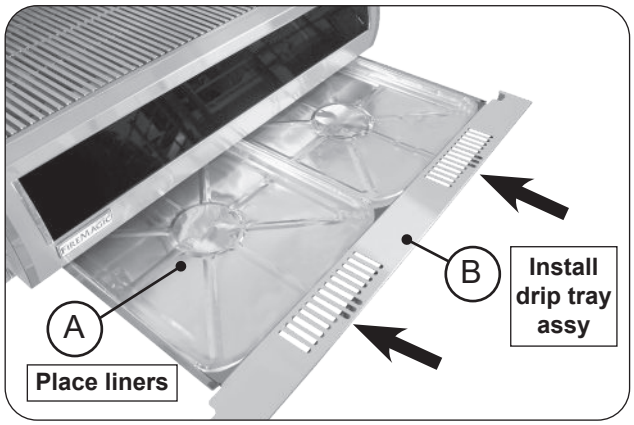

Fig. 26-1 Install drip tray

OPERATION TEST

After installation, perform an operation test of the grill and its features/components. Refer to the following sections for details.

USING THE GRILL

BEFORE INITIAL USE

Ensure that:

- the unit has been properly installed and tested by a qualified professional service technician and as instructed in this manual.
- you have read and understand all of the information in this manual.

BEFORE EACH USE

Ensure that:

- the recommended vent openings and surrounding area of the enclosure are clear at all times.
- the cooking area and drip tray are clean, and the drip tray is properly installed.
- you inspect all electrical connections for damage, cuts, wear, and tear. Replace any damaged components prior to use.

OPERATION

- **The unit (including the window glass, if equipped) becomes HOT during use. NEVER touch any part of the cooking area or surrounding hot surfaces with bare hands. Use long-handled insulated BBQ tools and wear an insulated glove / oven mitt.**
- **Always keep your face and body as far from the unit as possible during use. Avoid wearing loose-fitting clothing as they could ignite.**
- **This appliance is designed as an attended appliance. DO NOT leave this appliance in operation when unattended.**
- **NEVER cover more than 75% of the cooking surface with griddles, pots or pans to prevent overheating.**
- **After each use, press the thermometer power button to shut off the unit.**
- **The unit's fans will stay in operation, even after the unit has been turned off to quickly cool down the electronics.**

  Important: DO NOT DISCONNECT THE UNIT FROM POWER UNTIL THE FANS SHUT OFF AUTOMATICALLY AND THE ELECTRONICS HAVE COOLED DOWN TO A SAFE TEMPERATURE.

- **GFCI cord/outlet: Press the TEST button (then RESET button) every month to assure proper operation.**

After reading and understanding all bullets above, follow these steps to start the heating elements and use your grill:

1. Begin heating the grill per the DIGITAL THERMOMETER / THERMOSTAT section. See the THERMOMETER/THERMOSTAT & COOKING AREAS section below for additional details.
2. Set the element to the desired temperature (repeat for the second thermostat if applicable), close the hood, and allow the grill to preheat for at least 15 minutes or until desired cooking temperature is reached.
3. Place the food on the grill and cook as desired. Monitor the temperature, and adjust the heat setting if necessary.
4. See the sections below and the following pages for all other information regarding use.

THERMOMETER/THERMOSTAT & COOKING AREAS

Models with single control: The heating element and meat probe are controlled by the glass-touch digital thermometer/thermostat - see DIGITAL THERMOMETER/THERMOSTAT section for operation.

Models with dual controls: Your grill is divided into two cooking areas and are controlled independently by the two glass-touch digital thermometer/thermostats (Fig. 27-1). The left digital thermometer controls and monitors the left heating element and left meat probe jack, and the right digital thermometer controls and monitors the right heating element and right meat probe jack - see DIGITAL THERMOMETER/THERMOSTAT section for operation.

Fig. 27-1 Cooking areas (dual control models)

WIND CONSIDERATIONS

Proper airflow (front-to-back, Fig. 27-2) MUST be maintained for the unit to perform as it was designed. See the INSTALLATION REQUIREMENTS section for details.

When using the unit in windy conditions, the wind can disrupt the airflow and cause overheating. To prevent overheating during windy conditions, do not leave the hood closed with the element(s) on max setting for more than 15 minutes.

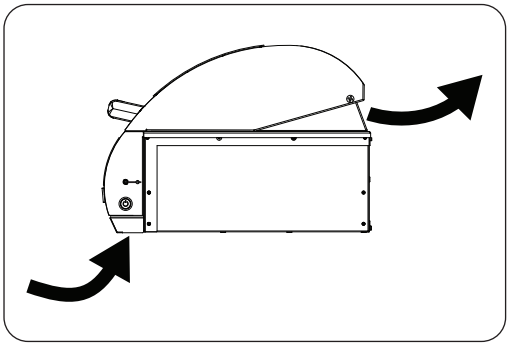

Fig. 27-2 Airflow diagram

AFTER EACH USE

1. Operate at 700° F with hood closed for 10-15 minutes to burn off all grease.
2. Turn off the grill and brush the cooking grids to remove all residue.

CAUTION: Use long-handled insulated BBQ tools and wear an insulated glove / oven mitt.

3. When the grill is cool, check and clean the drip tray. Then cover the grill.

Note: For additional cleaning information, refer to the SERVICING AND CLEANING section.

Models with a single control are equipped with a touch-panel controlled digital thermometer/thermostat for temperature adjustment, meat probe temperature monitoring, and timed cooking. Plug the meat probe into the meat probe jack found on the right side of the control panel as shown in Fig. 28-1, if desired.

Models with dual controls are equipped with two touch-panel controlled digital thermometer/thermostats. Each side of the grill has a dedicated temperature control, meat probe jack for temperature monitoring, and timed cooking. Plug the meat probe into the meat probe jack found on the left or right sides of the control panel as shown in Fig. 28-1.

Note: The following information provides guidance on operating a single thermometer/thermostat. For models with dual controls, **each thermometer/ thermostat is individually controlled for each cooking area.** See USING THE ELECTRIC GRILL section.

FOR OPTIMAL PERFORMANCE:

Keep the oven lid closed during cooking. This will maintain the cooking temp. (Frequently opening or leaving the lid open during cooking will result in greater temperature loss.)

Read the following sections completely regarding thermometer/thermostat operation. Refer to Fig. 28-2 for thermometer orientation and button locations.

Power ON / OFF

The **thermometer power switch** is located on the right side of the control panel (Fig. 28-3). It controls the power to the digital thermometer/thermostat.

Press thermometer power switch to turn ON: The digital controls will illuminate and the thermometer/thermostat will wait in **"standby mode"** until turned on for use. If the meat probe is plugged in, PROBE will also illuminate. See Fig. 28-4.

Note: The thermometer/thermostat must to be turned on manually via the touch controls before any functions on the grill can be used. To turn ON, see the Turn ON Thermostat/Thermometer Functions section.

Note: If the unit remains in standby mode without any button presses for 10 minutes, the illuminated buttons will turn off. To turn back on, swipe your hand across the general buttons area to illuminate the buttons.

Press thermometer power switch to turn OFF: The thermometer controls and heating element will shut off.

Note: The fans will remain on to continue cooling the electronics, see OPERATION section under USING THE GRILL section of this manual.

Note: To cut the grill completely from electrical power, it will need to be disconnected from the main power source (via power cord, GFCI disconnect, or circuit breaker as applicable).

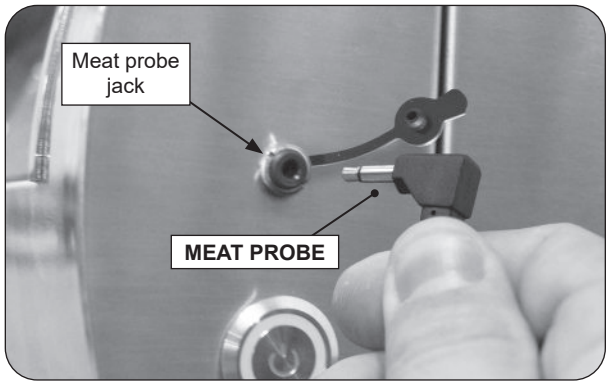

Fig. 28-1 Plug in meat probe

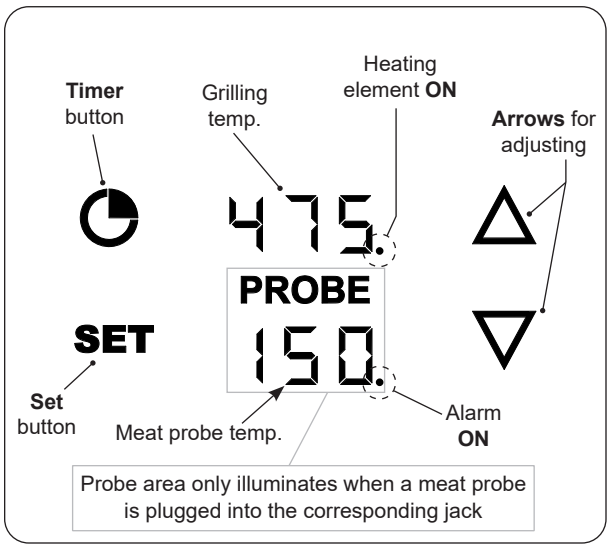

Fig. 28-2 Orientation (default screen)

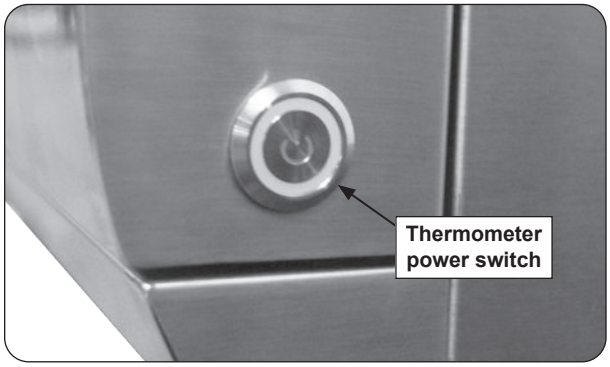

Fig. 28-3 Press thermometer power switch

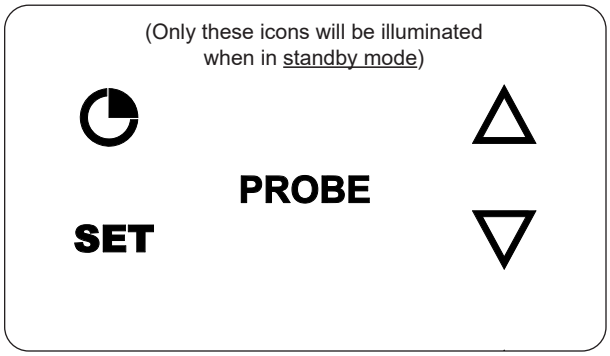

Fig. 28-4 Standby mode

Turn ON Thermometer/Thermostat functions

1. Turn on the power source to the appliance.
2. Press the **thermometer power switch**.
3. Press and hold the **TIMER** button (Fig. 29-1, A) until the remainder of the displays illuminate (Fig. 29-1, B). This is the "**default screen"**. The default screen displays your temperatures. The top display is the grilling temperature, and the bottom display is the meat probe temperature (if plugged in).

CAUTION: ONCE THE THERMOMETER/THERMOSTAT FUNCTIONS ARE TURNED ON, THE ELEMENT WILL AUTOMATICALLY BEGIN TO PREHEAT!

- The **dot** next to the grilling temp. indicates that the heating element is **on**. The **dot** turns on and off intermittently as the element maintains the set temp. See Fig. 29-2.
- The unit automatically preheats to the default temperature of 450° F. To set your desired temperature, see the Set Grilling Temperature section below.
- The thermometer/thermostat will automatically shut off 2 hours from the time the thermometer/thermostat functions are turned **on**. The thermometer/thermostat sits in **"idle mode"** until it is turned back on for use. See Idle Mode section for details.
- To turn off one of the thermometer/thermostats and continue operating the other, choose the thermometer you wish to turn off, press and hold the **SET** and **TIMER** buttons until the temperature display turns off. The thermometer and heating element are turned off. Press and hold the **TIMER** button to turn back on if desired.

Note: **Operating in cold weather conditions:** If the unit is powered on during cold weather (32° F or below) and the TOP display reads "- - -", Allow the unit sufficient time to preheat.The thermometer is not calibrated to read temperatures at or below 32° F. Allow the heating elements to warm up and the display will resume normal functioning once the unit temp rises above 32° F.

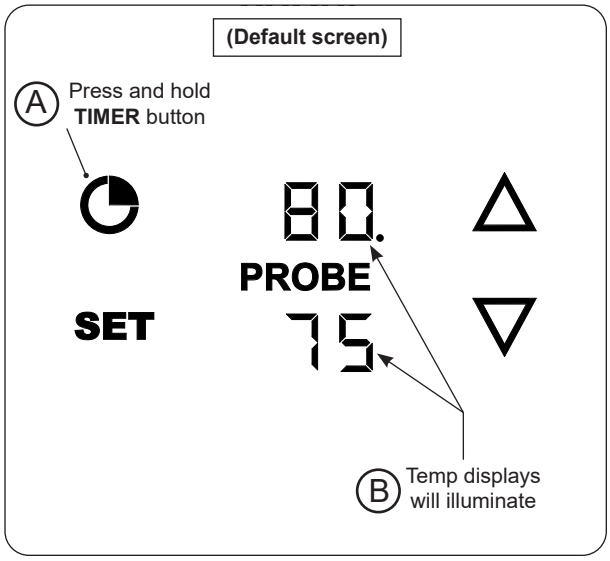

Fig. 29-1 Turn on thermometer/Thermostat

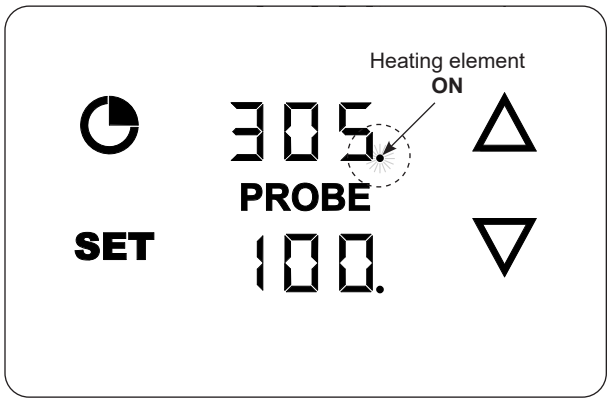

Fig. 29-2 Heating element ON

Set Grilling Temperature

1. With the thermometer/thermostat **on**, press the **SET** button once. The grilling and probe displays will blink. (While blinking, either area can be selected to enter their settings.) See Fig. 30-1, A and B.
2. Press the **UP ARROW** to select the grilling temp settings, *then* use the up or down arrows to set the desired temp. (Fig. 30-1, C).

Note: Short pressing the arrows will adjust in increments of 5°. Holding down an **UP** or **DOWN** arrow (for several seconds) will adjust the temp. rapidly.

- The default setting is 450° F. The minimum temp setting is 200° F. The maximum temp. setting is 700° F.

Note: The grilling temp controls the temperature inside of the grill. (This is the thermostat function.)

3. Press the **SET** button to confirm (or wait 5 seconds to confirm automatically). Once confirmed it will resume to the **"default screen"**.
   - The temp. display will climb until it reaches the set temperature. Once reached, the set temp will remain displayed regardless of the actual temperature (although frequent lid opening/closing, environmental conditions, and cold food insertion causes the temp. to fluctuate, the set temp will display the target temp. until a new temp. is set.). The element dot will remain illuminated until the targeted temp. is reached.

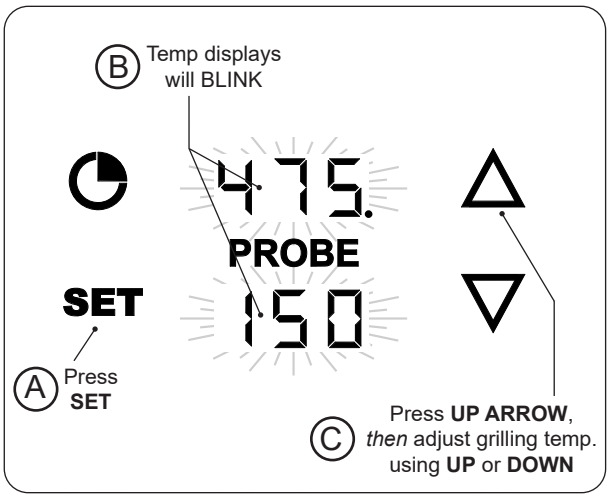

Fig. 30-1 Set grilling temp.

Setting Meat Probe Temp. & Meat Probe Alarm

Note: The digital display does not illuminate any probe information unless the meat probe is plugged in.

Meat probe temp:

1. With the thermometer/thermostat **on** and the meat probe plugged in, press the **SET** button once. The grilling and probe displays will blink. (While blinking, either area can be selected to enter their settings.) See Fig. 31-1, A and B.
2. Press the **DOWN ARROW** to select the probe settings, *then* you may use the up or down arrows to set the desired temp (Fig. 31-1, C).

Note: Short pressing the arrows will adjust in increments of 1°. Holding down an **UP** or **DOWN ARROW** (for several seconds) will adjust the temp. rapidly.

- The default probe setting is 160° F.

3. Press the **SET** button to confirm immediately or wait 5 seconds and it will confirm automatically. Once confirmed it will resume to the **"default screen"**.

Meat probe alarm:

Once the desired probe temp. has been set, press and hold the **SET** and **DOWN ARROW** until a **dot** appears next to the PROBE temperature. The **dot** indicates the probe alarm is **on**. See Fig. 31-2, A and B.

To disable the meat probe alarm, press and hold the **SET** and **DOWN ARROW** until the **dot** disappears. The alarm is **off**.

- Inserting the meat probe into the cooking meat will give an actual temp. reading. The display will flash and the alarm will sound when the set temp. is reached.
- Press any of the four buttons to silence.
- **The meat probe may be left attached to the meat for long-term use with the oven hood closed.**
- Probe tip must remain in the center of the thickest part of the meat when in use. Leaving the meat probe protruding through the meat while the oven hood is closed will damage the meat probe. The probe is calibrated specifically for use at temperatures between 130˚F and 180˚F. Tip exposure of 200˚F or more for extended time will damage probe and it will need to be replaced.
- If wire shows visible damage, meat probe needs to be replaced.
- Heat-resistant gloves MUST be worn when handling the hot meat probe.
- Cleaning the meat probe under running water is permittable, DO NOT fully submerge in water. It is NOT dishwasher-safe.
- Meat probe must be dried completely before use.
- Meat probe must be stored in the bamboo storage box when not in use.

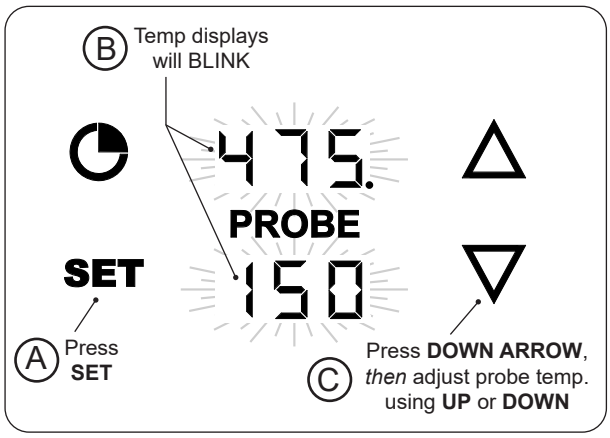

Fig. 31-1 Set probe temperature

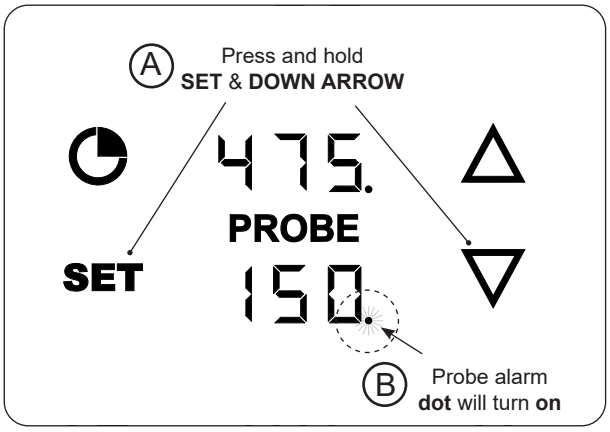

Fig. 31-2 Set probe alarm

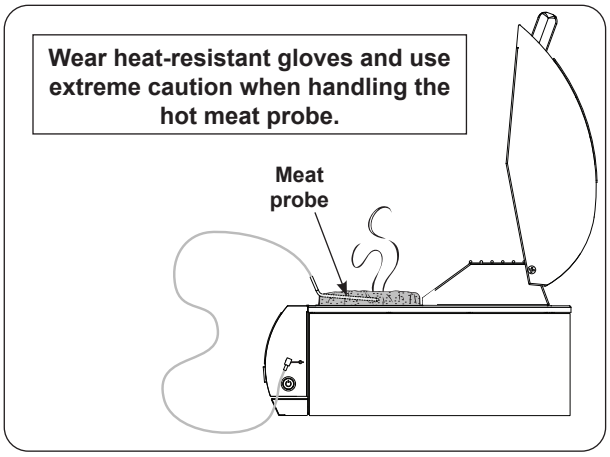

Fig. 31-3 Meat probe

Setting the Timer

1. With the thermometer/thermostat **on**, press the **TIMER** button once (Fig. 32-1, A). A zero will display indicating that no timer is set.
2. Press the **UP** or **DOWN** arrows to enter the desired amount of time or to modify an existing set time (Fig. 32-1, B).

Note: Short pressing the arrows will adjust in increments of one minute. Holding down the **UP** or **DOWN** arrow (for several seconds) will adjust the time rapidly.

3. Press the **TIMER** or **SET** button (or wait 5 seconds) to confirm. The timer will start counting down and the display will resume to the **"default screen"**.

- To check the timer status, press the **TIMER** button and the display will show the live countdown (for 5 seconds then, return to the default screen). See Fig. 32-2.
- The upper display indicates minutes and the lower display indicates seconds (see Fig. 32-2).
- When the timer has 10 seconds left, the countdown will display. Once the timer reaches zero the display will start flashing and the alarm will sound.
- Press any of the four buttons to silence and return to the **"default screen"**.
- **To cancel an active timer:** follow steps 1 and 2 above and adjust the time down to zero.

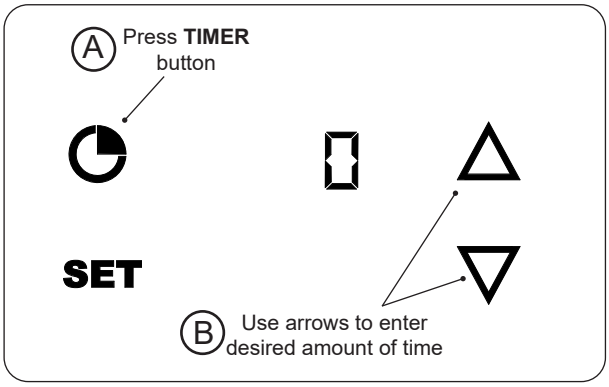

Fig. 32-1 Set timer

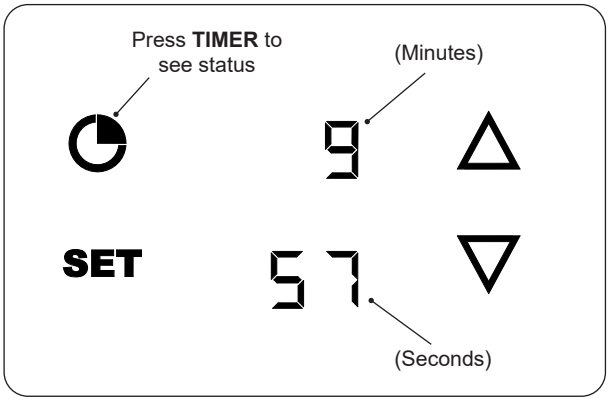

Fig. 32-2 Check timer status

Idle Mode

The thermometer/thermostat will automatically turn off and enter **"idle mode"** after 2 hours from the time the thermometer/thermostat functions are turned on. The heating elements and all functions will turn off as a safety measure.

Similar to **"standby mode"**, idle mode screen appears the same with the controls illuminated (Fig. 32-3), but this mode also memorizes your last settings used (as long as the thermometer power switch remains **on**). This will allow you to resume right where you left off.

To exit idle mode and resume grilling: press and hold the **SET TIMER** button until the remainder of the displays illuminate. See Fig. 32-3. The displays will fully illuminate and the heating element will turn back on.

Note: If the unit remains in idle mode without any button presses for 10 minutes, the illuminated buttons will turn off. To turn back on, swipe your hand across the general button area to illuminate the buttons.

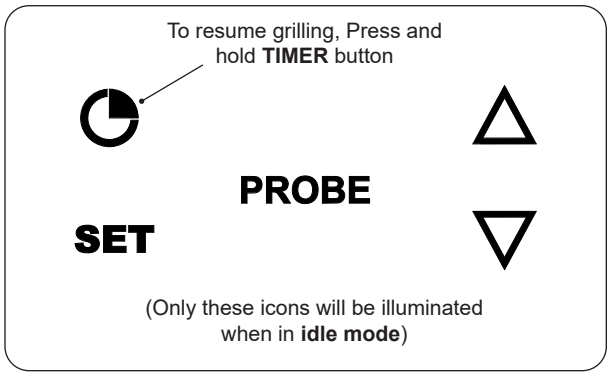

Fig. 32-3 Idle mode

Changing Temperature Unit

1. Press and hold the **UP** and **DOWN** arrows until **°F** or **°C** is displayed (Fig. 32-4, A).
2. Press the **UP** or **DOWN** arrow to select the desired temp unit (Fig. 32-4, B).
3. Press **SET** (or wait 5 seconds) to confirm. The display will return to the default screen with the newly set temperature unit.

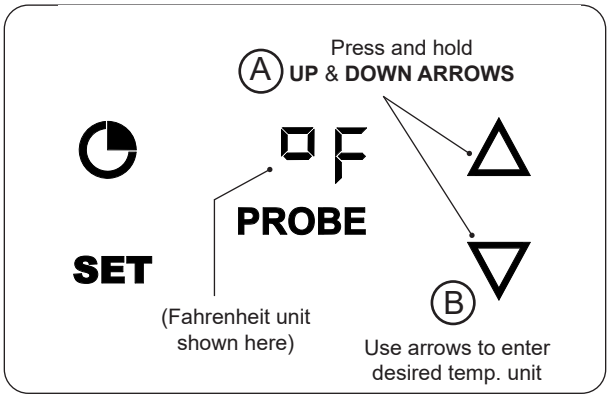

Fig. 32-4 Change temp. unit

SERVICING AND CLEANING

Your electric grill requires regular cleaning and maintenance. Refer to these instructions for details. Performing these procedures will ensure proper operation, appearance, and safety.

WARNINGS

- Prior to servicing or cleaning make sure the unit is completely cool, the unit is off, and the power supply is disconnected (as applicable and unless otherwise stated).
- Wear appropriate gloves and safety glasses during any servicing or cleaning.
- DO NOT spray any cleaner or liquids on the unit when hot.
- The unit MUST be cleaned regularly to prevent grease build-up and other food deposits. A clean and well maintained unit prevents the risk of grease build-up and grease fires.
- Verify proper operation after servicing or deep cleaning.
- See IMPORTANT SAFEGUARDS section for additional related information.

CLEANING YOUR ELECTRIC GRILL

Before Each Use

1. **Inspect and clean the exterior surfaces of the unit:** With a cool grill, clean any dust, grease, splatter, or spills as needed with a damp clean cloth.
2. **Clean the glass:**
   - Clean the glass control panel with a **non-abrasive** quality brand glass cleaner and a clean gentle cloth. DO NOT use other cleaners or chemicals to prevent scratching the glass.
   - Clean the Magic View Window (interior and exterior) with a quality brand glass cleaner and clean cloth.

After Each Use

1. **Clean the cooking grids:** Use a grill brush to clean the cooking grids of all residue. Use long-handled insulated BBQ tools and wear an insulated glove / oven mitt.

Important: The cooking element is self-cleaning (it does not require manual cleaning).

2. **Check and clean your drip tray:** When the unit is cool, carefully remove the drip tray and dispose of contents appropriately. If tray is equipped with a liner, dispose of the liner. Clean tray in a soapy water solution if needed. For tough deposits, a copper pad can be used. Rinse and dry completely. Replace a new liner and insert the tray back into the electric grill. Order more drip tray liners through your dealer.
3. **Cover your grill:** Once the unit is dry and cool, cover your grill with a Fire Magic protective cover (not included).

Twice A Year (or as needed) - Deep Clean

1. **Interior of grill:** In addition to cleaning the cooking grids and drip tray, a deep clean of the interior and all components MUST be performed twice a year (or as needed depending on use). Follow the steps below.
   - **a.** With a cool unit, open the oven lid and remove the cooking grids and inner liners. Clean all components in a soapy water solution, rinse, dry, and set aside. For tough deposits, a copper pad can be used. The components can also be cleaned in a dishwasher.

     Note: Refer to the parts list and INNER LINER REMOVAL section as needed.
   - **b.** Grill inner walls: use a grill cleaner and a copper pad to scrub the inner walls. Fire Magic grill cleaner is recommended. Follow instructions provided with the grill cleaner.

     Wipe down the entire surface of the inner walls with a wet, clean, heavy-duty rag. Remove all cleaner.
   - **c.** Re-install all components removed during this process.
2. **Exterior of grill:** With a cool grill, use a grill cleaner (or a soapy water solution) and a clean cloth to remove grease and dirt from the grill exterior. For tough deposits, a copper pad can be used. Always wipe with the grain. Rinse and dry completely. Then follow up with a stainless steel cleaner and a clean cloth. To clean the magic view window (if equipped), use a quality brand glass cleaner. DO NOT use other cleaners or chemicals.

   If this routine cleaning is not performed, the stainless steel may become dull and develop surface rust (due to use and atmospheric conditions). If left uncleaned, significant damage and pitting may occur.

Fig. 33-1 Wipe with grain

Important: DO NOT use steel wool, any other metal tools, or any other cleaners/chemicals to clean the exterior other than recommended above. Such items promote rust.

Note: Due to the nature of stainless steel, temperatures produced by the cooking process will cause discoloration. This can be reduced by routine cleaning.

For Environments High In Salt, Chloride, Or Other Corrosive Chemicals

When this grill is installed in a corrosive environment such as near the ocean (salt air), poolside (chlorine and/or pool chemicals) or any other location with exposure to high salt/chloride content or corrosive chemicals/solutions, it will be more susceptible to corrosion and MUST be maintained/cleaned more frequently.

- DO NOT store any corrosive chemicals (chlorine, hydrochloric acid, fertilizer, etc.) near your stainless steel unit.
- DO NOT allow any corrosive materials (masonry dust, debris, etc.) to settle on your stainless steel unit.
- These environments, chemicals, and materials may cause the 304 stainless steel to develop surface rust and consequently pitting. Under these conditions the unit exterior MUST be cleaned at least monthly. Inspect your grill often and clean accordingly.

Protecting Your Electric Grill

An optional Fire Magic protective cover will protect your grill when not in use. Install the cover on a cool and dry unit. DO NOT cover a damp grill. During high humidity or after rainy conditions, remove the cover to dry trapped moisture if present. (If the cover is installed over a damp unit it can cause surface rust.)

Ensure that the INSIDE of the cover is DRY before putting it back on the grill.

CONTROL PANEL REMOVAL

The interior of the control panel must only be accessed by a qualified professional service technician.

1. **Ensure the grill is completely cool and the power to the unit is disconnected.**
2. Remove the drip tray.
3. Loosen the nuts underneath the left and right sides of the control panel with a 11/32" closed-end wrench (see Fig. 35-1), then lift the panel until it is freed from the screws. Carefully rest the control panel by the internal chains.

Important: When opening, take caution to not damage any wiring.

4. If wire disconnections are required, reference the wire diagram in the MODEL SPECIFICATIONS section in this instruction manual or the wire diagram label affixed to the inside of the control panel.

Note: Whenever reconnecting any wires, apply a small amount of dielectric grease to the male connector, then make the connection. This will ensure conductivity and prevent moisture from affecting the contact.

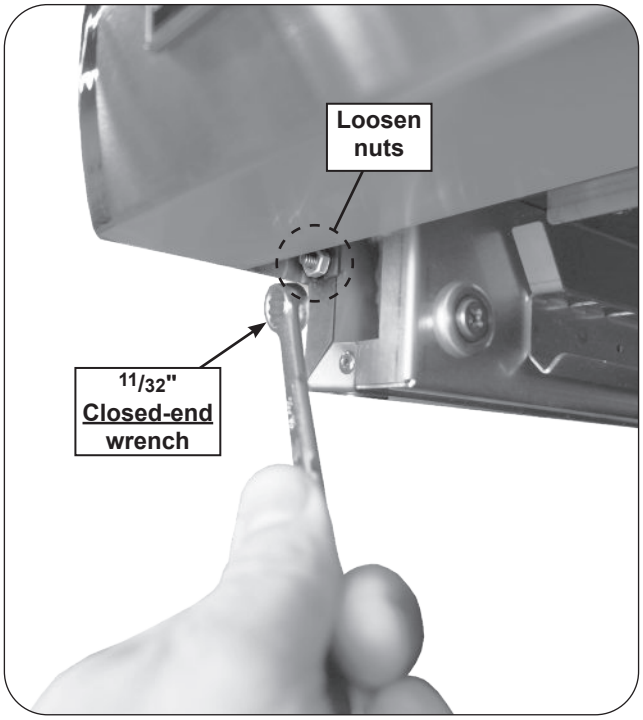

Fig. 35-1 Remove control panel

NOTES PAGE

Please use this page to record any information about your unit that you may want to have at hand.

TROUBLESHOOTING

If you have trouble with the unit, please use this list to identify the problem. By trying one or more of the solutions to the possible cause, you should be able to solve the problem. If this list does not cover your present problem, or if you have other technical difficulties with the unit, please contact your local dealer.

PROBLEM	POSSIBLE CAUSE	CORRECTION
Grill does not work	1. Power failure	1. Check if power is available.
	2. Power not connected properly	2. Make sure the power source and powering equipment is properly connected and tested.
	3. Thermal switch protection engaged	3. Electronics overheated and activated thermal switch. A quilified professional service technician must reset the thermal switch and inspect the unit thoroughly.
	4. GFCI or circuit breaker may be tripped	4. Reset GFCI or circuit breaker.
Thermometer/ thermostat does not work	1. No power to unit	1. Ensure power is available.
	2. Unit timed-out after 2 hrs (idle mode)	2. Swipe hand over controls to illuminate buttons and power on thermometer/thermostat.
	3. Faulty thermometer/thermostat	3. Contact your dealer.
	4. Display reads: **OH**	4. The PCB board overheated. Cause may be due to wind entering rear of lid, or grease fire. Allow to cool and turn back on. Check fans are working properly. If still no function, contact your local dealer.
	5. Display reads: **Err**	5. Thermocouple disconnected or faulty. Check connection or replace if faulty.
	6. BOTTOM display reads: **- - -**	6. Meat probe temp. exceeded limit. Let cool and retry, if still not functioning call dealer to replace.
Cooking element does not work	1. No power to unit	1. Ensure power is available.
	2. Bad element	2. Contact your dealer.

WARRANTY

PETERSON FIRE MAGIC GRILLS AND ACCESSORIES

LIMITED WARRANTY

R.H. Peterson Co. ("RHP") warrants your Fire Magic® grill to be free from defects in material and workmanship.

Fire Magic cast stainless-steel gas burners, Choice stainless steel U shaped burners, cooking grids, and Barbecue housings are warranted **as long as the original purchaser owns them -- LIFETIME**. (Except as described below.)

Fire Magic brass valves, manifold assemblies, inner liners, porcelain housings (including ovens and barbecue faces), and **backburner assemblies** (except ignition systems) are warranted for **FIFTEEN (15) YEARS**.

Fire Magic Electric Grill stainless steel cooking grids and stainless steel housings are warranted for **TEN (10) YEARS**. (Except as described below.)

Fire Magic built-in pizza ovens and built-in and portable griddles (except ignition system and thermostat) are warranted for **TEN (10) YEARS**.

Fire Magic Infra-red burners, flavor grids, and charcoal stainless steel grills are warranted for **FIVE (5) YEARS**; except for the charcoal pan, charcoal grid, thermometer, and ash catch tray, which are warranted for **ONE (1) YEAR**.

Fire Magic sideburners, exterior Glass Fiber Reinforced Concrete (GFRC) grill island systems, and all other grill, pizza oven and griddle components (except ignition systems and electronic parts) are warranted for **THREE (3) YEARS**.

Fire Magic grill, pizza oven and griddle ignition systems (excluding batteries), electronic components (including lights, thermometers and thermostats) and grill and pizza accessories are warranted for **ONE (1) YEAR**.

A COPY OF YOUR SALES SLIP FOR PROOF OF PURCHASE IS REQUIRED

This warranty applies to the original residential purchaser for products which are installed in the United States or Canada and which are operated and maintained as intended for single family residential usage. This warranty is valid only with proof of purchase, commences on the date of purchase, and terminates (both as to original and any replacement products) on the anniversary date of the original purchase of the product per the above schedules.

This warranty covers defects in material and workmanship. This warranty **does not** cover parts which become defective as a result of negligence, misuse, use not in compliance with the Installation and Owner's Manual, accidental damage, improper handling, improper storage, improper installation, **lack of required routine maintenance** (as specified in the Installation and Owner's Manual), or electrical damage. Product must be installed as specified in the Installation and Owner's Manual by a **qualified professional installer**. This warranty **does not** apply to rust, corrosion, oxidation, or discoloration unless the affected part becomes inoperable. RHP products including valves, pilots and controls, are designed and certified to be used as a system. Modifications to products which are not specifically authorized will void this warranty and could render the product to be unsafe. Burners, valves, parts, accessories, remotes, etc. used with this product must be RHP products or this warranty is void.

Warrantied items will be repaired or replaced at RHP's sole discretion. This warranty **does not** cover labor or labor related charges, except as provided by separate specific written programs from RHP. All repair work must be performed by a qualified professional service person and requires prior approval of RHP.

RHP may require the defective product or part to be returned to the factory to determine the cause of failure. RHP will pay freight charges if the product or part is determined to be defective. This warranty does not cover breakage in shipment from our independent distributor to its customer if the damage is determined to have occurred during that shipment.

This warranty specifically excludes liability for **indirect**, **incidental**, or consequential damages. Some states and provinces do not allow the exclusion or limitation of incidental or consequential damages, so the above exclusion may not apply to you. This warranty gives you specified legal rights, and you may have other rights that vary from state to state or province.

For additional information regarding this warranty, or to place a warranty claim, contact the RHP dealer where the product was purchased.

When contacting your RHP dealer or the R.H. Peterson Co., please provide the following information:

- Your name, address, telephone number, e-mail
- Sales receipt showing where purchased and date purchased
- Model number, serial number of product, date code
- Relevant information: installer, additions, repairs, when defect was first noted

TO REGISTER YOUR PRODUCT ONLINE GO TO: WWW.RHPETERSON.COM, AND CLICK ON PRODUCT REGISTRATION. THANK YOU FOR YOUR PURCHASE.

Quality Check	**Date:**_____		
Electrical Leak Test:	_____	**Burn Test:**	_____
Model#:	_____	**Serial#:**	_____
Inspector:	_____		