FIREMAGIC®

# ELECTRIC GRILL

## (POST PATIO MOUNT AND COUNTERTOP MODELS)

## E251s & E251t Series

## INSTALLATION INSTRUCTIONS AND OWNER'S MANUAL

Post Patio Mount model shown

**INSTALLER: Leave these instructions with consumer.**
**CONSUMER: Retain for future reference.**

**IMPORTANT:** READ THESE INSTRUCTIONS CAREFULLY BEFORE STARTING INSTALLATION OR USE.

## SAFETY AND WARNING CODES

### PLEASE READ AND FOLLOW

- Removing permanently affixed rating warning labels **WILL** void the warranty.
- Observe all local codes and ordinances when installing this appliance. If no local codes are applicable, wire unit in accordance with the latest National Electrical Code, ANSI/NFPA 70, or the Canadian Electrical Code, CSA C22.1, whichever is applicable.

### ⚠ WARNING

When connecting this appliance to a power supply make sure that it is the same voltage as the unit rating. Improper connection may cause severe damage to the components or decrease the performance of your Fire Magic electric grill. A rating plate specifying voltage, hertz, wattage, and amps is attached to the unit. Also see the IMPORTANT SAFEGUARDS section. To avoid the risk of property damage and/or personal injury, installation work and electrical wiring must be performed by a qualified professional service technician. This appliance must be installed in accordance with this instruction.

### ONLY TO BE USED OUTDOORS

### ⚠ WARNING

Improper installation, adjustment, alteration, service, or maintenance can cause injury or property damage. For proper installation, refer to the installation instructions. For assistance or additional information, consult a qualified professional service technician or service agency.

### ⚠ WARNING

To minimize the risk of property damage and/or personal injury, do not use a flexible extension power-supply cord unless it conforms with the specifications as listed in this manual (see IMPORTANT SAFEGUARDS section).

NOT FOLLOWING THESE INSTRUCTIONS EXACTLY WILL VOID THE MANUFACTURER'S WARRANTY.

**Certified to: ANSI/UL 1026**

PFS® C US

**Cooking Grid U.S. Patent Nos. D857,453 D862,984**

FIREMAGIC®

# ELECTRIC GRILL

## (MODÈLES POST PATIO MONT ET COUNTERTOP)

### Séries E251s et E251t

## INSTRUCTIONS D'INSTALLATION ET MANUEL DU PROPRIÉTAIRE

Modèle Post Patio Mont montré

**INSTALLATEUR : Laissez ces instructions avec le consommateur.**

**CONSOMMATEUR : Maintenez pour la future référence.**

**IMPORTANT:** LISEZ CES INSTRUCTIONS SOIGNEUSEMENT AVANT DE COMMENCER L'INSTALLATION OU L'UTILISATION.

## SÛRETÉ ET CODES D'AVERTISSEMENT

**SVP LISEZ ET SUIVEZ**

- L'enlèvement de manière permanente a apposé des avertissements d'étiquette d'estimation videra la garantie.
- Observez tous les codes et ordonnances locaux en installant cet appareil. Si aucun code local n'est applicable, unité de fil selon le plus défunt code électrique national, ANSI/NFPA 70, ou le code électrique canadien, CSA C22.1, celui qui est applicable.

**⚠ AVERTISSEMENT**

En reliant cet appareil à une alimentation d'énergie assurez-vous que c'est la même tension que l'estimation d'unité. Le raccordement inexact peut endommager considérablement les composants ou diminuer l'exécution de votre gril électrique de Magic du feu. Une plaque de contrôle indiquant la tension, les hertz, la puissance en watts, et les ampères est attachée à l'unité. Voir aussi la section MISES EN GARDE IMPORTANT. Pour éviter le risque de dommages aux biens et / ou des blessures, les travaux d'installation et le câblage électrique doit être effectuée par un technicien de service professionnel qualifié. Cet appareil doit être installé selon cette instruction.

**À UTILISER UNIQUEMENT À L'EXTÉRIEUR**

**⚠ AVERTISSEMENT**

L'installation inexacte, l'ajustement, le changement, le service, ou l'entretien peuvent causer des dommages ou des dégats matériels. Pour l'installation appropriée, référez-vous aux instructions d'installation. Pour de l'aide ou des renseignements supplémentaires, consulter une agence de technicien de maintenance ou de service professionnel qualifié.

**⚠ AVERTISSEMENT**

Pour réduire au minimum le risque de dégats matériels et/ou de blessures, n'employez pas une prolongation flexible puissance-fournissent la corde à moins qu'elle se conforme aux caractéristiques comme énuméré en ce manuel (voir la section MISES EN GARDE IMPORTANT).

NON SUIVANT CES INSTRUCTIONS EXACTEMENT VIDERONT LA GARANTIE DU FABRICANT.

**Certifié à: ANSI/UL 1026**

PFS® C US

**Grille de cuisson Numéros de brevets américains:**
**D857,453 D862,984**

# CONTENTS

## GETTING STARTED


IMPORTANT SAFEGUARDS....4
INSTALLATION REQUIREMENTS....6
*OVERHEAD CONSTRUCTION REQUIREMENTS*....6
*REAR WALL CLEARANCES*....7
*SIDE WALL CLEARANCES (if applicable)*....7
*CORNER WALL CLEARANCES (if applicable)*....7
*COOLING AIRFLOW*....8
MODEL SPECIFICATIONS....9
*WIRING DIAGRAM*....10
ELECTRIC GRILL REPLACEMENT PARTS LIST....11


## INSTALLATION


INSTALLATION....12
*ELECTRICAL SETUP*....12
*COUNTERTOP MODELS*....12
*POST PATIO MOUNT MODELS*....12
*CONNECT POWER CORD*....13
*INSTALL COOKING GRIDS*....13
*INSTALL WARMING RACK*....13
*INSTALL ROTISSERIE BRACKET (IF EQUIPPED)*....13
*INSTALL DRIP TRAY*....14


## USE, CARE, & SERVICE


DIGITAL THERMOMETER / THERMOSTAT....15
OPERATION....18
*COOKING ELEMENT*....18
*ROTISSERIE (IF EQUIPPED)*....18
*DROP DOWN SHELVES (if applicable)*....19
SERVICING AND CLEANING....20
*CLEANING YOUR ELECTRIC GRILL*....20
*CONTROL PANEL REMOVAL*....22
*INNER LINER REMOVAL*....22
TROUBLESHOOTING....23
WARRANTY....24

## WARNING!

When using electrical appliances, basic safety precautions must always be followed including the following:

1. **Read all instructions.**
2. Do not touch hot surfaces, always use the handle.
3. To protect against electrical shock, do not immerse cord, plugs, probe or grill in water or other liquids.
4. Close supervision is necessary when any appliance is used near children.
5. Unplug from outlet when not in use and before cleaning or servicing. Allow to cool before putting on or taking off parts.

   **Note:** After use and shut-off of this unit, **DO NOT** immediately disconnect the electric supply. The electric fan in this unit will continue to operate so that the unit may completely cool. Always allow sufficient cooling time prior to disconnecting the electric supply.
6. Do not operate appliance with a damaged cord or plug or after the appliance malfunctions or has been damaged in any manner. Return appliance to the nearest authorized service facility for examination, repair or adjustment.
7. The use of accessory attachments not recommended by the appliance manufacturer may cause injuries.
8. Do not let cord hang over edge of table or counter, or touch hot surfaces.
9. Do not place on or near a hot gas or electric burner or in a heated oven.
10. Extreme caution must be used when moving an appliance containing hot oil or other hot liquids.
11. To disconnect, turn any controls to OFF, allow time for the unit to cool completely, then remove plug from wall outlet.
12. Do not use appliance for other than intended use.
13. Fuel, such as charcoal briquettes, is not to be used with appliance.
14. Use only on a properly grounded receptacle:

    **Use only a properly wired and inspected 120VAC (15 AMP minimum) Ground Fault Circuit Interrupter (GFCI) <u>GROUNDED</u> 3-wire receptacle with this outdoor cooking appliance.** The GFCI receptacle must be a WEATHER-PROOF IN-USE COVERED RECEPTACLE. Never remove the grounding plug or use with an adapter of 2 prongs.
15. NEVER grill in the open rain or in standing water as this grill is an electric appliance. There is always a hazard of electric shock while operating this unit.
16. Keep the appliance area clear and free from combustible materials, gasoline, and other flammable vapors. **ALL MINIMUM CLEARANCES STATED IN THE INSTALLATION REQUIREMENTS SECTION MUST BE MAINTAINED.**
17. This appliance does not contain a fuse or surge protector. The power to the unit must be made readily accessible to the operator through means of a dedicated 15 AMP circuit breaker.
18. **The provisions of the National Electric Code as well as any local codes must be observed when installing the product.**
19. Store products indoors when not in use - out of reach of children.

**20.** A short power-supply cord is provided to reduce the risk resulting from becoming entangled in or tripping over a longer cord. Extension cords may be used if care is exercised in their use.

If an extension cord is used:

The marked electrical rating of the extension cord should be at least as great as the electrical rating of the appliance. The cord should be arranged so that it will not drape over the countertop or tabletop where it can be pulled on by children or tripped over unintentionally.

Use only **14-gauge** extension cords that have a 3-wire grounding plug, are approved for outdoor use, are surface marked with the suffix letter "W", and have a tag stating "suitable for use with outdoor appliances." The length of the cord extension **must NOT exceed 25 feet**. Examine extension cord before using and replace if damaged. Connection to an extension cord shall be kept dry and off the ground.

**21. NEVER cover more than 75% of the cooking or grill surface with griddles or pans. Overheating of the electronic components will occur.**

## SAVE THESE INSTRUCTIONS

### IMPORTANT

**IN THE EVENT OF A GREASE FIRE, IMMEDIATELY UNPLUG THE UNIT (OR TURN OFF THE POWER AT THE SOURCE). KEEP THE LID OPEN AND ALLOW THE FIRE TO EXTINGUISH ITSELF. KEEP AT A SAFE DISTANCE. A THOROUGH INSPECTION BY A QUALIFIED PROFESSIONAL SERVICE TECHNICIAN SHOULD BE CONDUCTED BEFORE FUTURE USE OF YOUR UNIT. THE SERVICE TECHNICIAN WILL CHECK ALL ELECTRICAL WIRING FOR DAMAGE. ALL WIRING MUST BE REPAIRED PRIOR TO FUTURE USE.**

### NOTE

**WHEN INSTALLING AND OPERATING THIS APPLIANCE AS PART OF A PRE-FAB ELECTRIC GRILL ISLAND BUNDLE, ALSO FOLLOW THE INSTRUCTIONS INCLUDED WITH THE ISLAND.**

**Installation must be performed by a qualified professional service technician.**

## OVERHEAD CONSTRUCTION REQUIREMENTS

Refer to Fig. 6-1:

- A minimum clearance of 30" is required between the cooking surface and any overhead construction directly above the grill. The construction directly above the grill must have a minimum width of 30".
- A minimum clearance of 18" is required between the countertop (for countertop model) or shelves (for post model) and any overhead construction to the sides of the grill.
- A maximum depth of 13" is permitted for the overhead cabinets.
- It is recommended that the area above the cooking surface of the unit be covered with an exhaust hood.

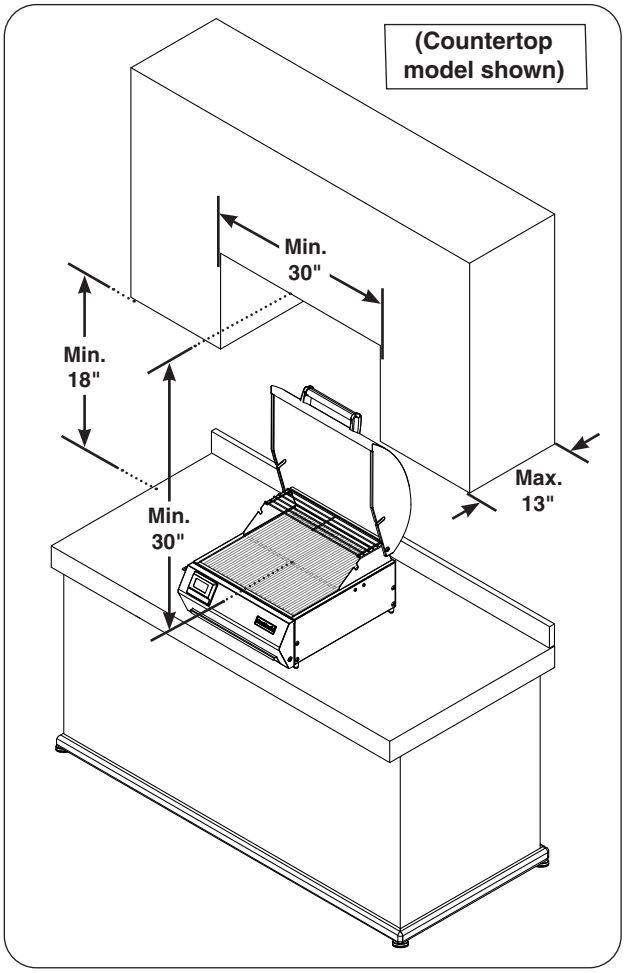


**Fig. 6-1** Overhead requirements

## REAR WALL CLEARANCES

The unit must have a minimum clearance of 4" from the rear wall (see Fig. 7-1).

(To allow for proper ventilation and prevent dangerous overheating.)

## BACKSPLASH CLEARANCE (if applicable)

If a backsplash exists, it must have a minimum of a 4" clearance from the rear of the unit (to allow for proper ventilation and prevent dangerous overheating). See Fig. 7-2.

**Important:** This 4" backsplash clearance must first be met prior to any walls beginning behind it.

## SIDE WALL CLEARANCES (if applicable)

The unit must have a minimum clearance of 6" from any side walls. See Fig. 7-3.

## CORNER WALL CLEARANCES (if applicable)

The unit must have a minimum clearance of 18" from any side walls (to account for variables in airflow that could affect performance). See Fig. 7-4.

Clearances continued on following page

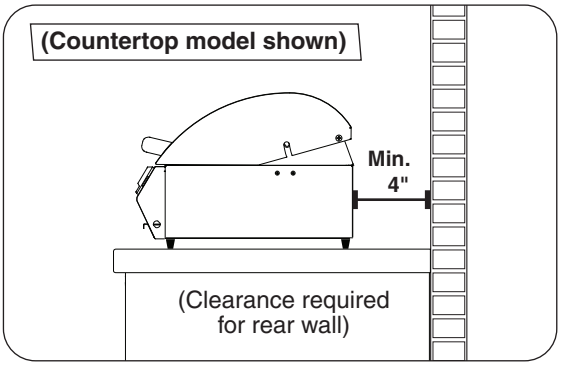


**Fig. 7-1** Clearance '**A**' Diagram

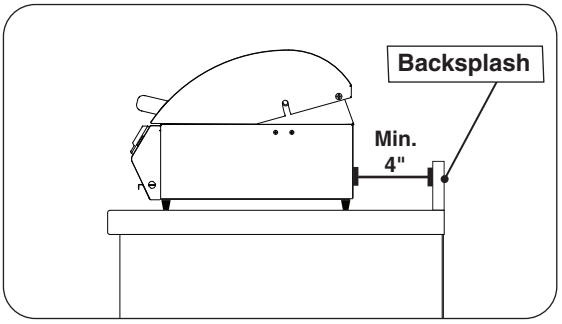


**Fig. 7-2** Backsplash clearance

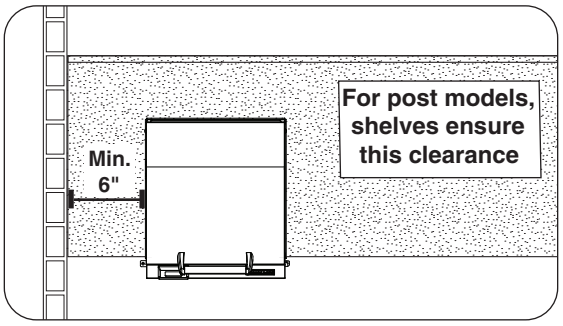


**Fig. 7-3** Side wall clearance

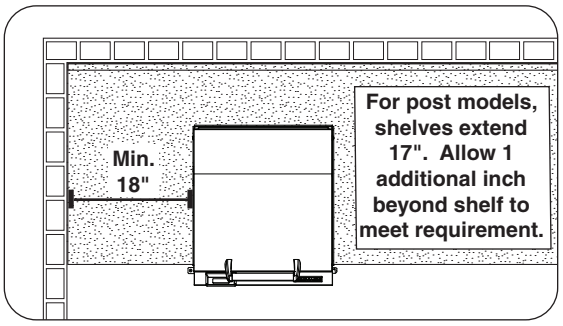


**Fig. 7-4** Corner wall clearance

## COOLING AIRFLOW

Proper airflow (front-to-back, Fig. 8-1) MUST be maintained for the unit to perform as it was designed. If airflow is blocked, overheating will result. Do not block the 1" front air inlet along the bottom of the control panel.

**CAUTION:** Wind blowing into or across the rear oven lid vent (Fig. 8-3) can cause poor performance and/or dangerous overheating. Install the grill so that the prevailing wind blows toward the front of the grill (Fig. 8-2).

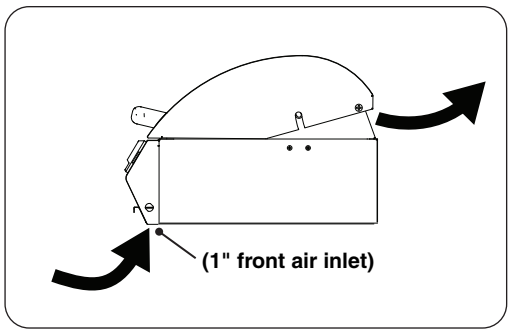


**Fig. 8-1** Airflow diagram

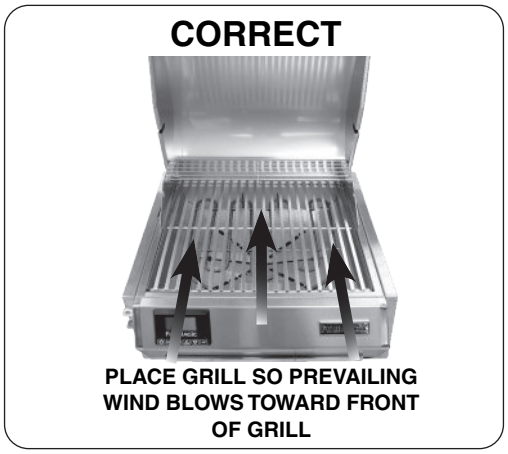


**Fig. 8-2** Airflow direction - CORRECT

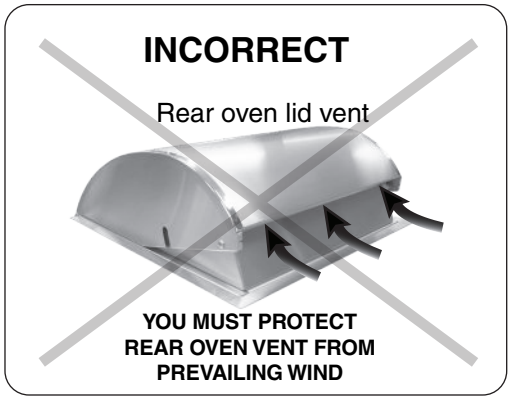


**Fig. 8-3** Airflow direction - INCORRECT

# MODEL SPECIFICATIONS

| | |
|---|---|
| Input electrical requirements | **120VAC / 15 AMP minimum / 60 Hz / GFCI outlet *** |
| Appliance rating | **120VAC / 1,680 watts / 14 AMP / 60 Hz** |
| * See IMPORTANT SAFEGUARDS section for important details regarding GFCI outlets and extension cords. | |

**Table 1 -** Product Specifications

**The grill serial identification number and rating label is located behind the unit.**

| Height | | | Width | | | Depth | |
|---|---|---|---|---|---|---|---|
| Floor to top (with oven) | | Floor to top of shelf **(C)** | Left to right | | | Front to back | |
| Open **(A)** | Closed **(B)** | | Post base **(D)** | Shelves up **(E)** | Shelves down **(F)** | Post base **(G)** | Maximum outer w/ hood open **(H)** |
| 57" | 43" | 33 1/2" | 26" | 41 1/4" | 22 1/2" | 20 1/4" | 23" |

**Table 2 -** Grill Dimensions - Post Patio Mount Models

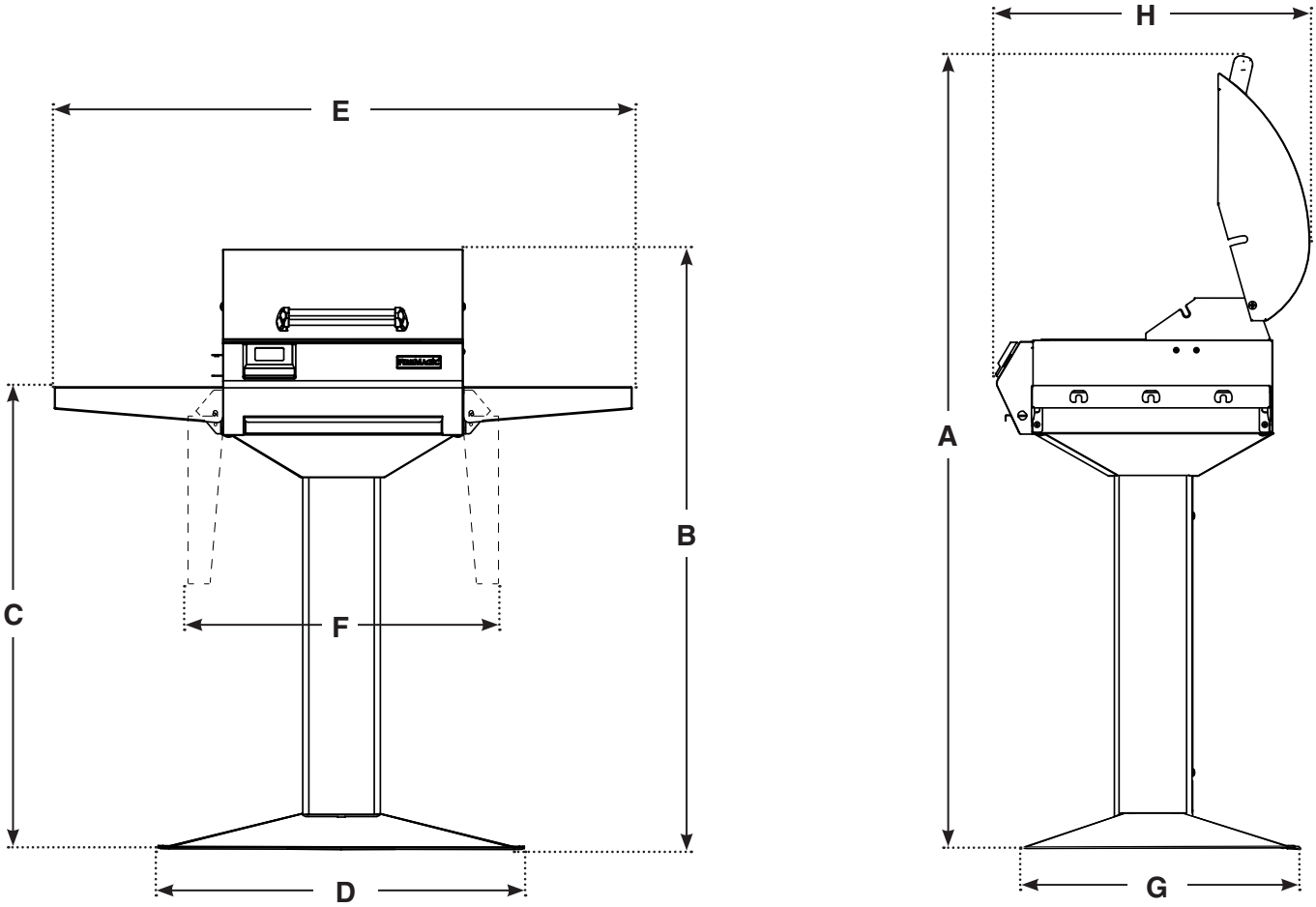


**Fig. 9-1**

| Height | | Width | Depth |
|---|---|---|---|
| Base to top (with oven) | | Left to right | Front to back |
| Open **(A)** | Closed **(B)** | **(C)** | Maximum outer w/ hood open **(D)** |
| 28" | 14” | 19" | 23" |

**Table 3 -** Grill Dimensions - Countertop Models

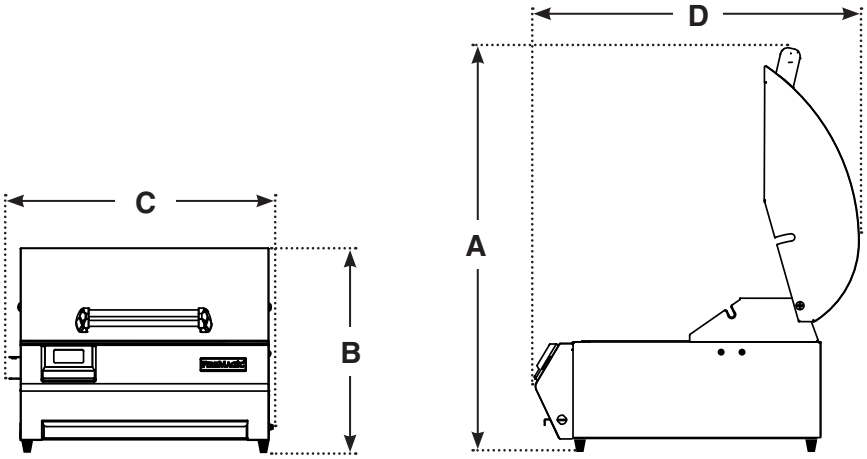


## WIRING DIAGRAM

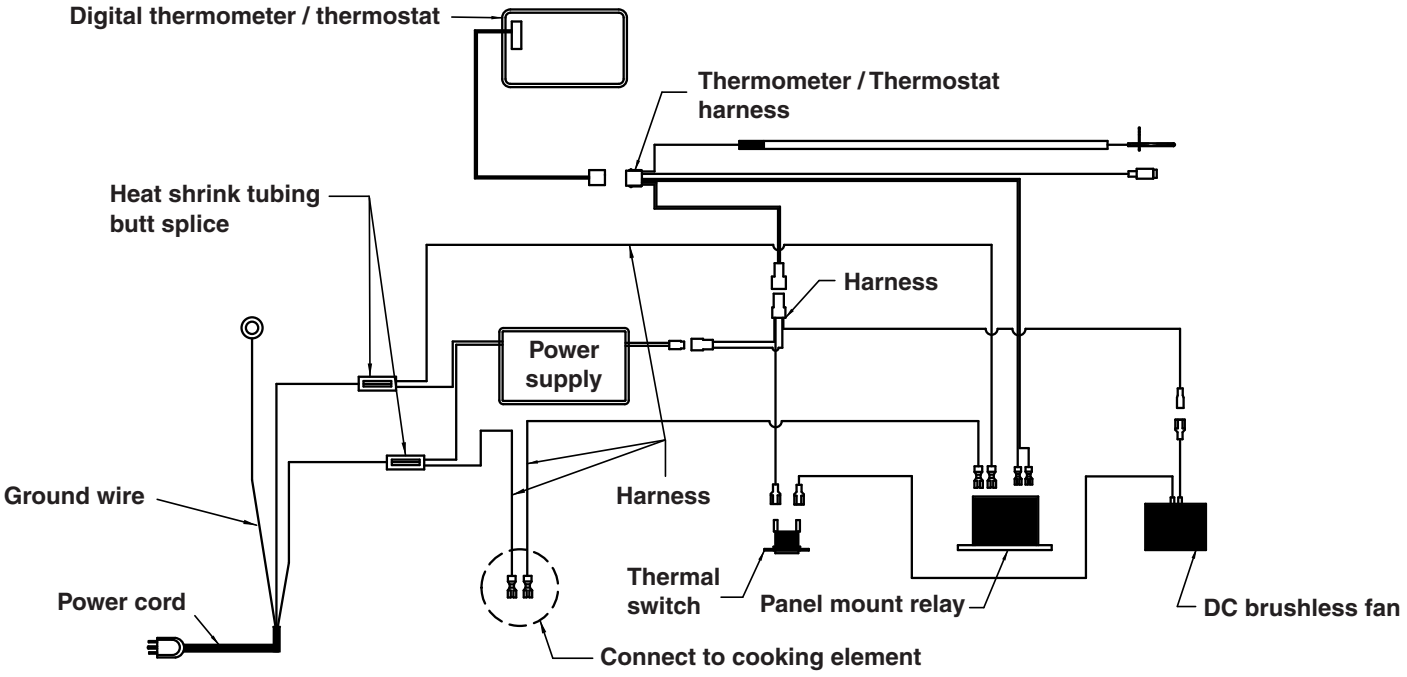


**Fig. 10-1**

**Note: In addition, a wire diagram can be found affixed to the inside of the control panel.**

# ELECTRIC GRILL REPLACEMENT PARTS LIST

| Item | Description | Part No. | Qty. |
|---|---|---|---|
| 1. | Stainless cooking grid (set of 2) | 3549-DS-2 | 1 |
| 2. | Cooking element | 23115-01A | 1 |
| 3. | Inner liner kit | 23115-02A | 1 |
| 4. | Handle assy. | 23115-26 | 1 |
| 5. | Oven lid | 23115-51 | 1 |
| 6. | Warming rack | 3680A | 1 |
| 7. | Digital thermometer/thermostat | 23115-12 | 1 |
| 8. | Digital thermometer/thermostat wire harness * | 23115-13 | 1 |
| 9. | Control panel w/ power cord & electronics | 23115-07 | 1 |
| 10. | Meat probe | 24187-14S | 1 |
| 11. | Drip tray | 3086 | 1 |
| 12. | Bumpers (set of 4) † | 23115-09 | 1 |
| 13. | Drop down shelf ‡ | 25115-015 | 2 |
| 14. | Post assy ‡ | 25115-03 | 1 |
| 15. | Post hardware kit ‡ | 24330-25 | 1 |
| 16. | Rotisserie kit ▲ | 3604S | 1 |
| 17. | Drip tray liners (1 tray included, set of 4 provided at reorder) | 3558 | 1 |
| 18. | Countertop cover * † ▲ | 3642 | 1 |
| 19. | Pedestal cover * ‡ ▲ | 5115-20 | 1 |

* Not shown
† Countertop models only
‡ Pedestal models only
▲ Optional accessory

**IMPORTANT**

**Remove all packing material and discard prior to use.**

**Replacement parts can be ordered from your local Fire Magic® dealer.**

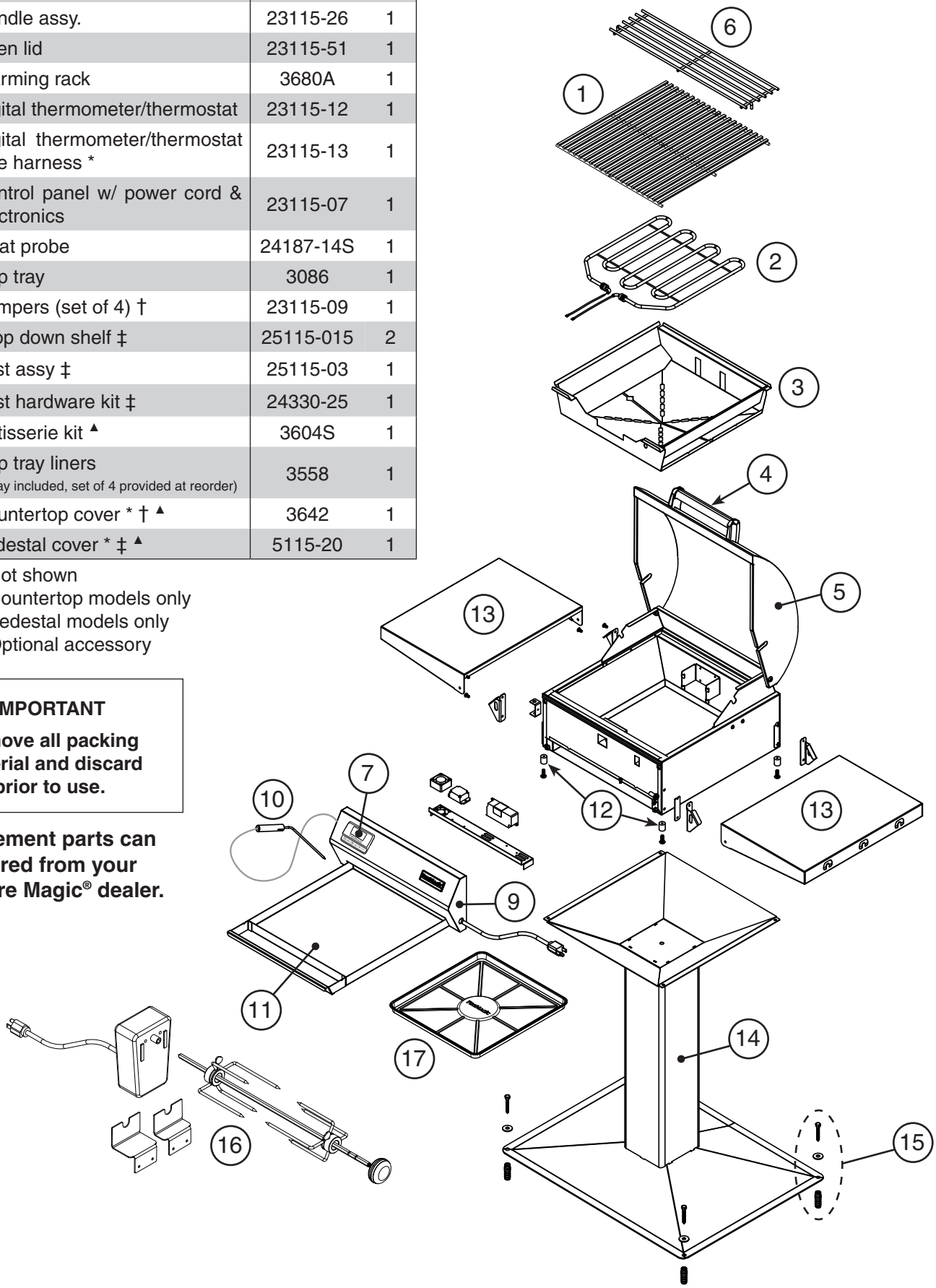

## ELECTRICAL SETUP

A **120VAC (15 AMP minimum) GFCI GROUNDED 3-wire receptacle** (not included) is required within the vicinity of the grill to provide power to the unit. The GFCI receptacle must be a WEATHER-PROOF IN-USE COVERED RECEPTACLE. Your individual installation may vary. **Observe the National Electric Code and all local codes.**

1. Wire the receptacle into the area of the unit.

- **Verify proper polarity of the receptacle.**
- **If an extension cord is used, ensure it meets all specifications found in the IMPORTANT SAFEGUARDS section.**
- **DO NOT TAMPER WITH THE EXTENSION CORD OR THE UNIT POWER-SUPPLY CORD.**

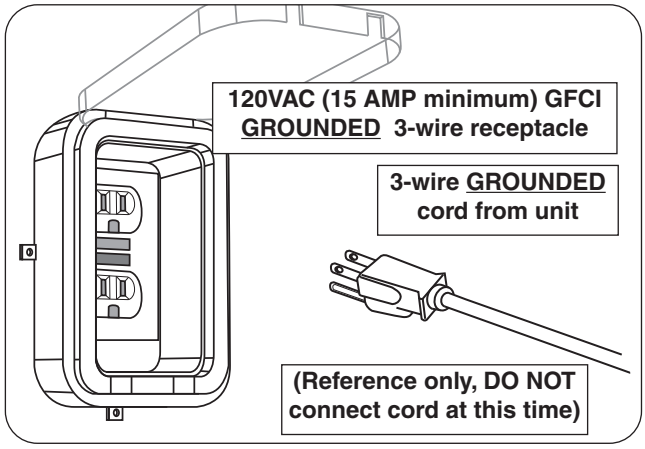


**Fig. 12-1** Electrical setup detail

## COUNTERTOP MODELS

Be sure the unit is stationed on a clean, dry, and level surface, and that all requirements in the IMPORTANT SAFEGUARDS and INSTALLATION REQUIREMENTS sections are met.

Proceed to the CONNECT POWER CORD section.

## POST PATIO MOUNT MODELS

### Install the electric grill to the post assembly

2. Using a Phillips screwdriver, remove the four screws and bumpers on the bottom of the grill. Discard the bumpers. See Fig. 12-2.
3. Align the electric grill onto the top of the post assembly. Using the same four screws, fasten the electric grill to the post assembly. See Fig. 12-3.

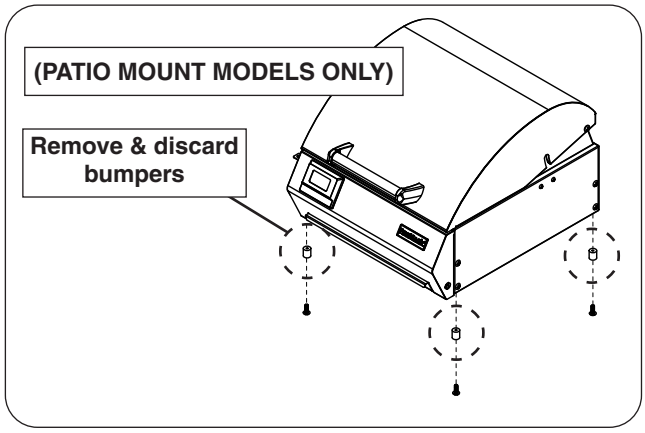


**Fig. 12-2** Remove bumpers (if applicable)

### Secure the patio mount grill

**Important:** Ensure that all requirements in the IMPORTANT SAFEGUARDS section and INSTALLATION REQUIREMENTS section are met before permanently securing the patio mount grill.

**Important:** **BEFORE USE**, the grill base must be securely fastened to a stable, level surface to ensure the grill remains fixed and upright at all times.

1. Locate the patio mount base in the planned grill location and mark the 4 holes. Drill the marked holes to a 1/2" diameter x 1 1/2" depth. Insert the lag shields (see Fig. 12-3) into the holes, being sure that they are flush with the ground.
2. Align the holes on the patio mount base over the lag shields in the ground. Secure the base with the lag screws (see Fig. 12-3) using a 7/16" nut driver.

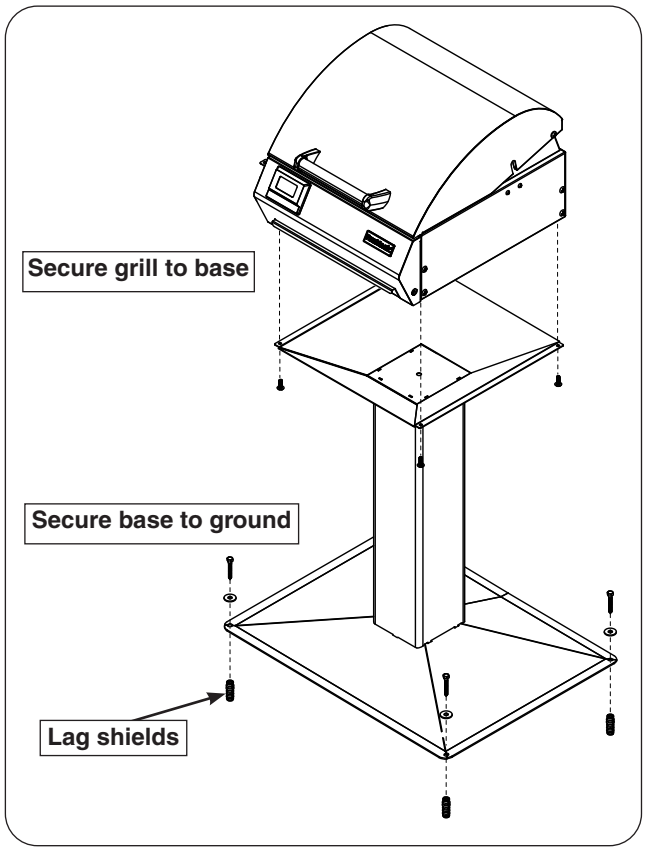


**Fig. 12-3** Post model installation

### Install the drop down shelves

This grill comes with two (2) drop down shelves that must be attached. These can be attached using the four support screws (provided) and a Phillips-head screw driver.

**Important:** Take caution to not cross-thread when tightening the screws.

1. Remove the four screws on one side of the grill.
2. Align a shelf assembly to the side of the grill.
3. Using the same screws, fasten the shelf to the electric grill. Repeat for the other side.

**Fig. 13-1** Install drop down shelves

### CONNECT POWER CORD

Route the power cord (coming from the right side of the control panel) to the previously wired **120VAC (15 AMP minimum) GFCI GROUNDED 3-wire receptacle** and connect.

### INSTALL COOKING GRIDS

Carefully place the cooking grids onto the front and rear grid rests of the unit (see Fig. 13-2).

### INSTALL WARMING RACK

Install the warming rack by inserting the two feet through the holes found on the raised walls of the unit (see Fig. 13-2).

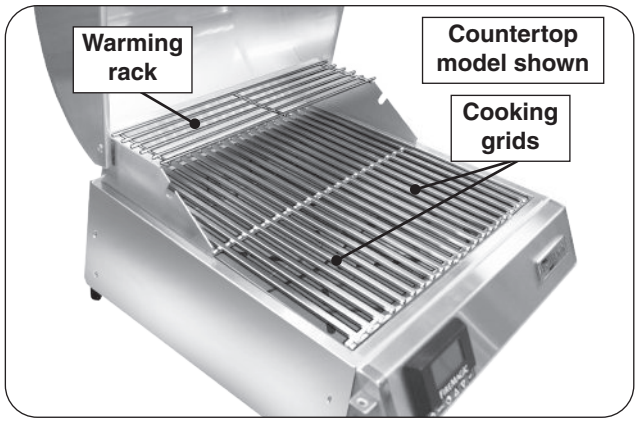


**Fig. 13-2** Install cooking grids and warming rack

### INSTALL ROTISSERIE BRACKET (IF EQUIPPED)

If an optional rotisserie has been purchased; the rotisserie bracket must be installed prior to use.

1. Using a Phillips screwdriver; remove the 2 screws located towards the rear, left side of the grill.
2. Locate the correct rotisserie bracket for your installation. Use the <u>small</u> bracket to mount the rotisserie motor. Do not use the large bracket as it is for built-in models only. See Fig. 13-3.
3. Align the holes of the rotisserie bracket with the exposed screw holes on the grill. Using the screws from step 1, fasten the bracket to the grill (see Fig. 13-4).

Reference the ROTISSERIE section for instructions on how to use the rotisserie.

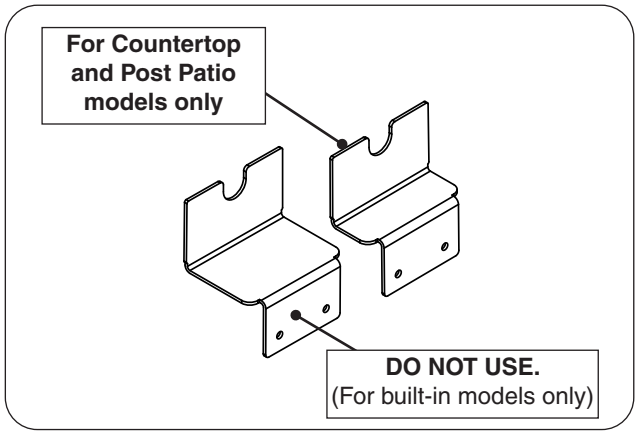


**Fig. 13-3** Select rotisserie bracket (if equipped)

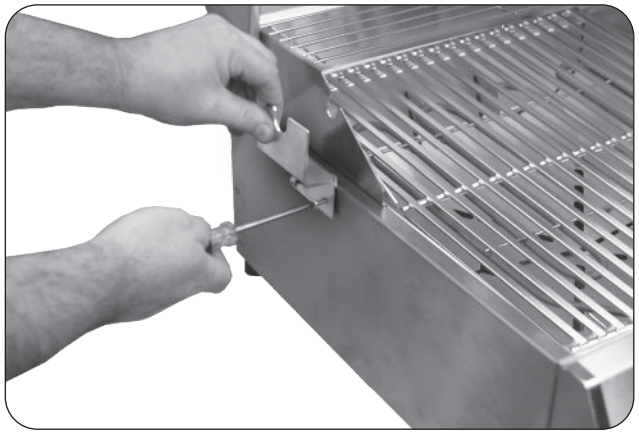

**Fig. 13-4** Install bracket (if equipped)

## INSTALL DRIP TRAY

Your grill includes a sample drip tray liner. Place the liner into the drip tray as shown in Fig. 14-1, and fully insert the drip tray into the bottom front of the control panel.

**Note:** Be sure to center the liner in the drip tray, so that it provides complete coverage under all of the openings in the grill.

**Fig. 14-1** Install drip tray

Your electric grill comes with a digital thermometer/thermostat for temperature control, oven and meat probe temperature monitoring, and timed cooking. Pressing the power button on the thermometer will turn on the grill. **Once the grill is turned on, the cooking element immediately begins to heat. Preheating of the grill is required for it to reach the desired cooking temperature. Set the desired temperature as instructed below.**

The thermometer will automatically shut off 2 hours from the time the power button is pressed.

**For optimal performance, keep the oven lid closed during cooking. This will maintain the cooking temperature.** (Frequently opening or leaving the lid open during cooking will result in greater temperature loss.)

The thermometer is located on the left side of the control panel. The actual grill temperature will be maintained within a 20 degree (Fahrenheit) differential of the set temperature.

Plug in the meat probe on the left side of the control panel as shown in Fig. 15-1.

**FOR BEST PERFORMANCE, GENTLY PRESS THE BUTTONS.** When turned on, accurate temperature readings will begin after the thermometer has initialized. When turned off, allow 5 seconds prior to turning back on.

Read the following sections completely regarding thermometer/thermostat operation. Refer to Fig. 15-2 for thermometer orientation and button locations.

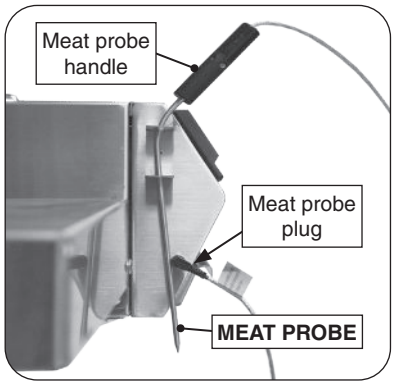


**Fig. 15-1** Meat probe detail

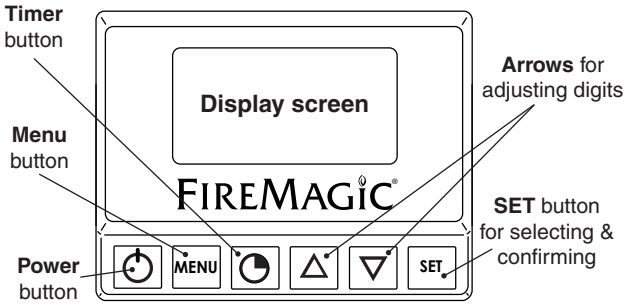


**Fig. 15-2** Orientation

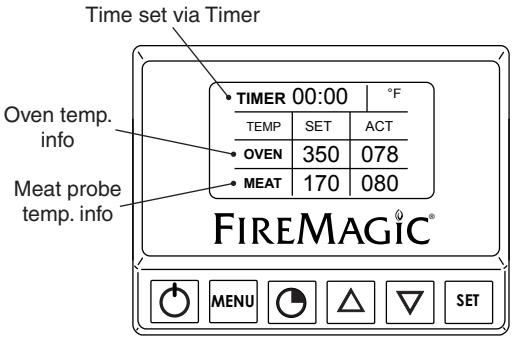


**Fig. 15-3** Default screen detail

## Default Screen

**Press the power button to turn the thermometer ON.** The default screen will be displayed. Temperatures for the oven and meat probe will be shown (see Fig. 15-3).

## Menu Screen

**Press the power button to turn the thermometer ON.** The default screen will be displayed. Press the **MENU** button to display its screen. Press the up/down arrow to scroll through the options (see Fig. 15-4).

**Note:** The menu screen will return to the default screen after approximately 30 seconds of no activity. Press the **MENU** button to manually return to the default screen.

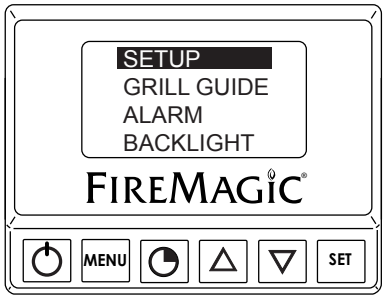


**Fig. 15-4** Menu screen

## Setting Oven and/or Meat Probe Temperature

1. From the default screen, press the down arrow to the desired oven / meat probe area (flashing). Press **SET**.

**Note:** The OVEN SET TEMP controls the temperature inside of the grill. (This is the thermostat function.)

2. The selected location's temperature screen will be displayed. Use the arrows to set the desired temp. The actual temp. will also be shown (see Fig. 16-1).

**Note: PRESSING the arrows will adjust the desired temp. by increments of one degree. HOLDING them down (for several seconds) will adjust the temp. rapidly.**

3. Press **SET** to return to the default screen. Repeat as necessary for other area.

The display will flash red and the alarm will sound (if set to do so) when the oven / meat probe reaches its set temperature. Press any button to silence.

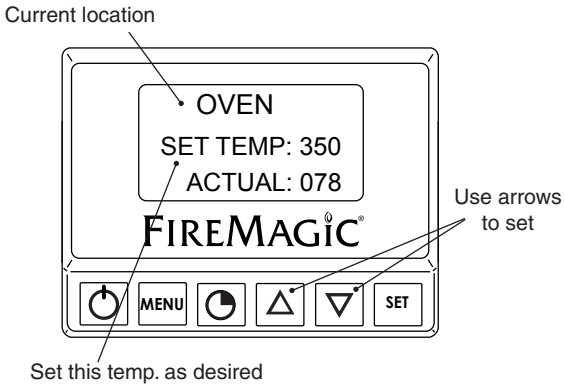


**Fig. 16-1** Area temp. screen (oven shown)

## Grill Guide and Meat Probe

The grill guide displays recommended ready temperatures for various meats (see Fig. 16-2).

1. Under the menu screen select GRILL GUIDE. Press **SET**.
2. Press the up/down arrow to view the desired meat.
3. Note the temp. and press **SET**. This will take you to the meat probe temperature screen.
4. Use the arrows to set the noted temp.
5. Press **SET** to return to the default screen.

Inserting the meat probe into the cooking meat will give an actual temp. reading. The display will flash red and the alarm will sound (if set to do so) when the actual temp. reaches the set temp. Press any button to silence.

**Do not leave the meat probe in the meat for a prolonged period of time, or with the hood closed. The meat probe is calibrated specifically for use at temperatures between 130°F and 180°F.**

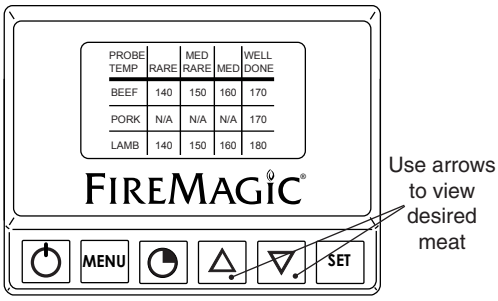


| PROBE TEMP | RARE | MED RARE | MED | WELL DONE |
|---|---|---|---|---|
| BEEF | 140 | 150 | 160 | 170 |
| PORK | N/A | N/A | N/A | 170 |
| LAMB | 140 | 150 | 160 | 180 |

**Fig. 16-2** Grill Guide screen

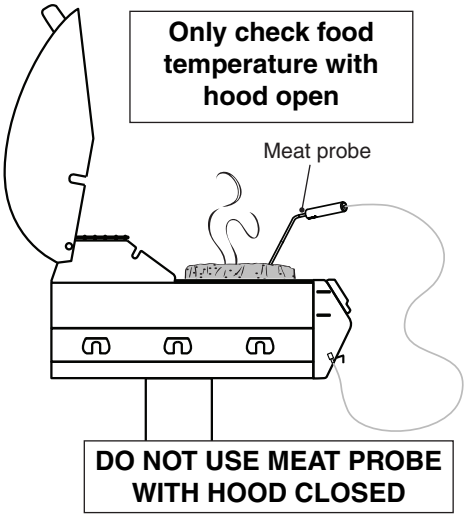


**Fig. 16-3** Meat probe

## Setting the Timer

1. Press the timer button. Use the arrows to set the desired amount of time (see Fig. 16-4).
2. Press **SET** to return to the default screen.

The time remaining will be shown on the default screen. Once the time reaches zero; the display will flash red and the alarm will sound. Press any button to silence.

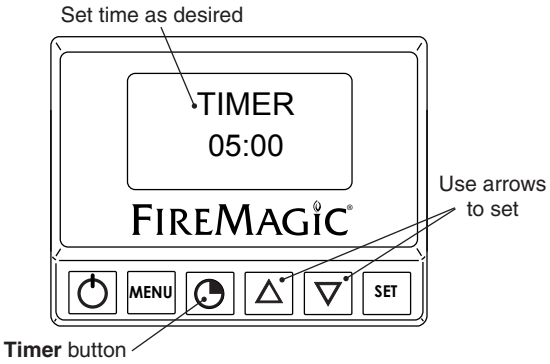


**Fig. 16-4** Timer screen

### Setting the Alarm (Oven Temp. or Meat Probe)

The alarm can be individually set (ON or OFF) for the meat probe and oven temp. The default setting has the alarm OFF for the meat probe and oven temp. The alarm always alerts for the TIMER.

1. Under the menu screen select ALARM. Press **SET**.
2. Use the up/down arrow to select the desired alarm, and press the power button to turn the alarm ON/OFF.
3. Press **SET** to return to the menu screen.
4. Press **MENU** to return to default screen.

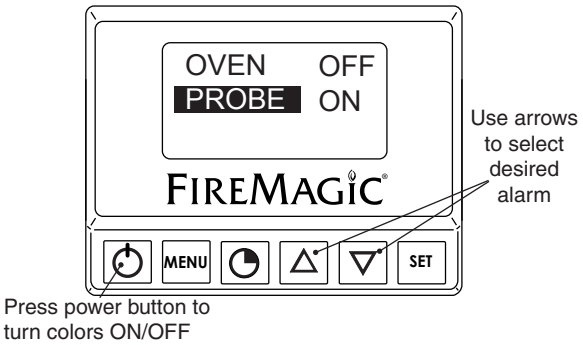


**Fig. 17-1** Alarm screen

### Setting the Thermometer Backlight

The default color for the thermometer backlight is blue. The color may be changed as desired by turning the three base colors ON/OFF. Various combinations will result in different colors.

1. Under the menu screen select BACKLIGHT. Press **SET**.
2. Use the up/down arrow to select the desired color, and press the power button to turn the color ON/OFF.
3. Press **SET** to return to the menu screen. The new color will now show.
4. Press **MENU** to return to default screen.

**Note:** Turning all colors OFF will result in no backlight.

**Important:** **Turn on no more than 2 colors at a time.**

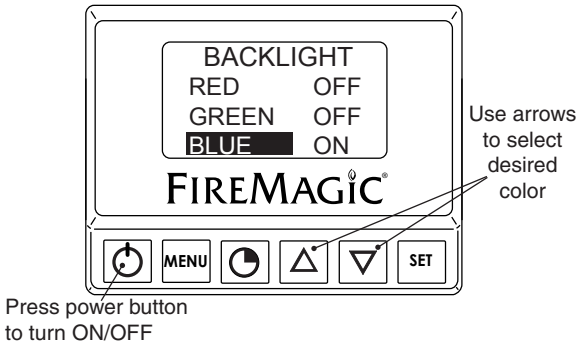


**Fig. 17-2** Backlight screen

### Changing Temperature Scale (°C/°F)

1. Under the menu screen select SETUP. Press **SET**.
2. Press **SET** to select **SETUP FC**.
3. Select as desired and press **SET** to return to the menu screen.
4. Press **MENU** to return to the default screen.

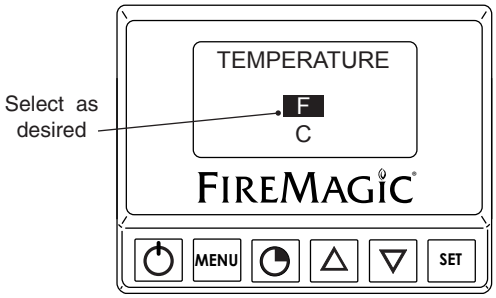


**Fig. 17-3** Temperature scale screen

## COOKING ELEMENT

The cooking element may be adjusted between two different heights. Be sure the grill is off and completely cool before making any adjustments.

1. Remove the warming rack and cooking grids.
2. Grasp the cool cooking element, lift upwards and apply pressure towards the right of the grill. Once it clears the tab, raise or lower it to the desired height. (See Fig. 18-1.) Be sure it securely rests in position.
3. Replace the cooking grids and warming rack.

**Important:** To prevent overheating, the cooking element must not come in contact with the thermocouple. A nominal clearance of 1/8" must be maintained at all times. (See Fig. 18-2.)

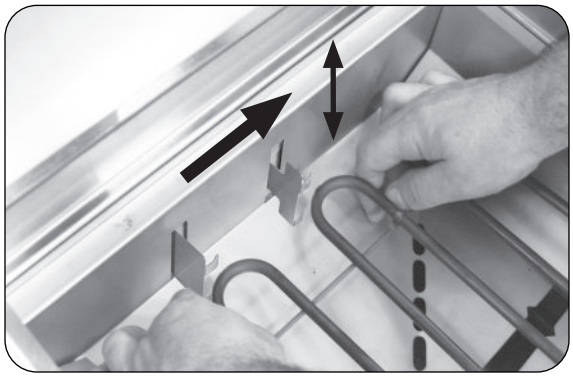

**Fig. 18-1** Adjust cooking element

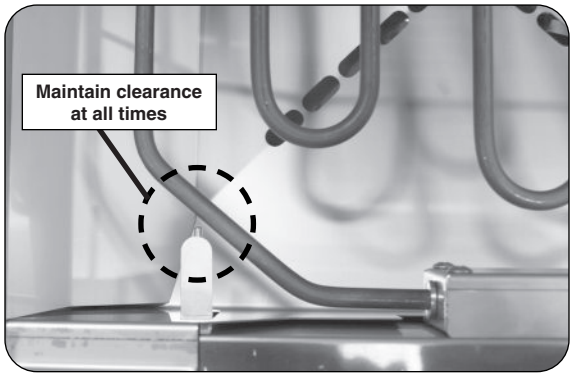


**Fig. 18-2** Thermocouple clearance

## ROTISSERIE (IF EQUIPPED)

Be sure the grill is off and completely cool before beginning rotisserie set up.

1. Remove the warming rack and cooking grids.
2. Adjust the cooking element to the lowest position (if necessary). See COOKING ELEMENT section above for details.
3. Slide the rotisserie motor fully onto the motor bracket located on the left side of the grill (Fig. 18-3).
4. Slide right meat holder into position on rotisserie rod as shown in Fig. 18-4 and tighten screw.
5. Slide meat onto rod and into holder (Figs. 18-4).

   **Note:** To allow proper operation, meat diameters should not exceed 8 inches.
6. Slide left meat holder onto rod and into meat (Fig. 18-4). Tighten thumb screw.
7. Support both ends of the rod so it spins freely. If meat weight is distributed unevenly, the rod will rotate until the heavy side of the meat points downward.
8. Insert the pointed end of the rod into the motor drive socket, and the groove next to the knob into the notch on the right side of the grill.
9. Plug in the rotisserie motor and press the switch to start.

**CAUTION:** **<u>WHEN USING THE ROTISSERIE, KEEP THE OVEN LID CLOSED</u> TO PREVENT HEAT LOSS, PROVIDE PROPER CONVECTION, AND PROVIDE PROPER VENTING. THIS WILL ENSURE EVEN COOKING TEMPERATURES.**

**<u>DO NOT KEEP YOUR OVEN LID OPEN DURING ROTISSING</u>, AS THIS MAY CAUSE PERSONAL INJURY, OR IN SOME CASES, IN WINDY CONDITIONS, DAMAGE TO THE GRILL.**

Reference the DIGITAL THERMOMETER/THERMOSTAT section to begin cooking.

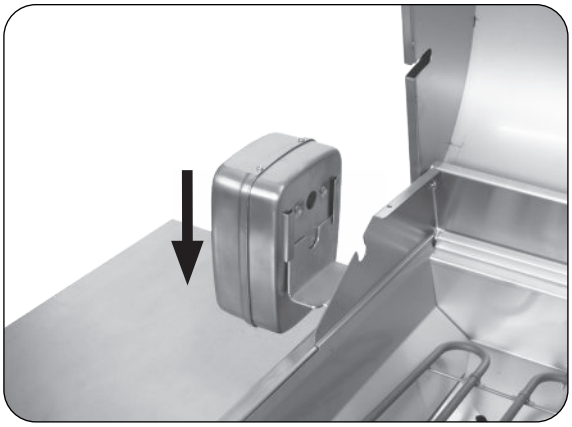

**Fig. 18-3** Install rotisserie motor

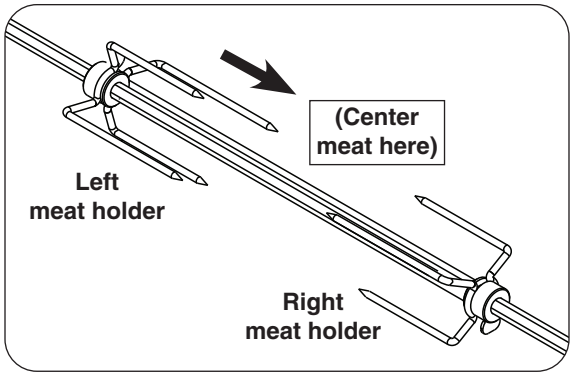


**Fig. 18-4** Install meat holders

**DROP DOWN SHELVES (if applicable)**

1. To lower the shelf, grab the middle of the shelf on both sides and lift upward (see Fig. 19-1). Then allow the end of the shelf to rotate down as pictured in Fig. 19-2 and Fig. 19-3.
2. To raise the shelf, grab the middle of the shelf on both sides and raise it to the horizontal position. Lift slightly upward, and lock the shelf safely into position.

**CAUTION:** Do **NOT** place fingers near hinge when closing.

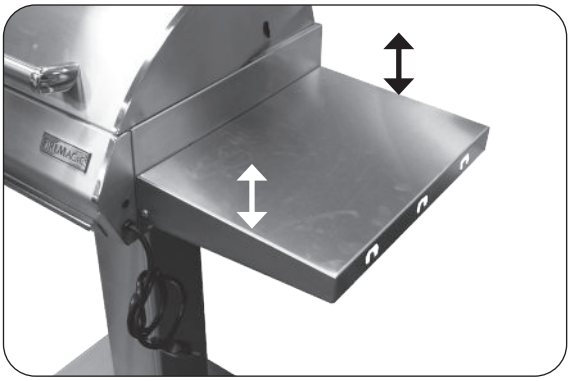

**Fig. 19-1** Shelf up and locked

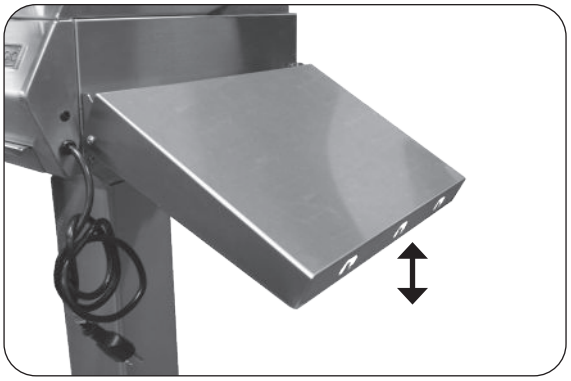

**Fig. 19-2** Being lowered or raised

**Fig. 19-3** Shelf down

# SERVICING AND CLEANING

**Your electric grill requires regular cleaning and maintenance.** Refer to these instructions for details. Performing these procedures will ensure proper operation, appearance, and safety.

**WARNINGS**

- Prior to servicing or cleaning make sure the unit is completely cool, the unit is off, and the power supply is disconnected (as applicable and unless otherwise stated).
- Wear appropriate gloves and safety glasses during any servicing or cleaning.
- DO NOT spray any cleaner or liquids on the unit when hot.
- The unit MUST be cleaned regularly to prevent grease build-up and other food deposits. A clean and well maintained unit prevents the risk of grease build-up and grease fires.
- Verify proper operation after servicing or deep cleaning.
- See IMPORTANT SAFEGUARDS section for additional related information.

## CLEANING YOUR ELECTRIC GRILL

### Before Each Use

1. **Inspect and clean the exterior surfaces of the unit:** With a cool grill, clean any dust, grease, splatter, or spills as needed with a damp clean cloth.

### After Each Use

1. **Clean the cooking grids:** Use a grill brush to clean the cooking grids of all residue. Use long-handled insulated BBQ tools and wear an insulated glove / oven mitt.

**Important:** The cooking element is self-cleaning (it does not require manual cleaning).

2. **Check and clean your drip tray:** When the unit is cool, carefully remove the drip tray and dispose of contents appropriately. If tray is equipped with a liner, dispose of the liner. Clean tray in a soapy water solution if needed. For tough deposits, a copper pad can be used. Rinse and dry completely. Replace a new liner and insert the tray back into the electric grill. Order more drip tray liners through your dealer.
3. **Cover your grill:** Once the unit is dry and cool, cover your grill with a Fire Magic protective cover (not included).

### Twice A Year (or as needed) - Deep Clean

1. **Interior of grill:** In addition to cleaning the cooking grids and drip tray, a deep clean of the interior and all components MUST be performed twice a year (or as needed depending on use). Follow the steps below.
   - **a.** With a cool unit, open the oven lid and remove the cooking grids and inner liners. Clean all components in a soapy water solution, rinse, dry, and set aside. For tough deposits, a copper pad can be used. The components can also be cleaned in a dishwasher.

     **Note:** Refer to the parts list and INNER LINER REMOVAL section as needed.
   - **b.** Grill inner walls: use a grill cleaner and a copper pad to scrub the inner walls. Fire Magic grill cleaner is recommended. Follow instructions provided with the grill cleaner.

     Wipe down the entire surface of the inner walls with a wet, clean, heavy-duty rag. Remove all cleaner.
   - **c.** Re-install all components removed during this process.
2. **Exterior of grill:** With a cool grill, use a grill cleaner (or a soapy water solution) and a clean cloth to remove grease and dirt from the grill exterior. For tough deposits, a copper pad can be used. Always wipe with the grain. Rinse and dry completely. Then follow up with a stainless steel cleaner and a clean cloth.

   If this routine cleaning is not performed, the stainless steel may become dull and develop surface rust (due to use and atmospheric conditions). If left uncleaned, significant damage and pitting may occur.

**Fig. 20-1** Wipe with grain

**Important:** DO NOT use steel wool, any other metal tools, or any other cleaners/chemicals to clean the exterior other than recommended above. Such items promote rust.

**Note:** Due to the nature of stainless steel, temperatures produced by the cooking process will cause discoloration. This can be reduced by routine cleaning.

## For Environments High In Salt, Chloride, Or Other Corrosive Chemicals

**When this grill is installed in a corrosive environment such as near the ocean (salt air), poolside (chlorine and/or pool chemicals) or any other location with exposure to high salt/chloride content or corrosive chemicals/solutions, it will be more susceptible to corrosion and MUST be maintained/cleaned more frequently.**

- DO NOT store any corrosive chemicals (chlorine, hydrochloric acid, fertilizer, etc.) near your stainless steel unit.
- DO NOT allow any corrosive materials (masonry dust, debris, etc.) to settle on your stainless steel unit.
- These environments, chemicals, and materials may cause the 304 stainless steel to develop surface rust and consequently pitting. Under these conditions the unit exterior MUST be cleaned at least monthly. Inspect your grill often and clean accordingly.

## Protecting Your Electric Grill

An optional Fire Magic protective cover will protect your grill when not in use. Install the cover on a cool and dry unit. DO NOT cover a damp grill. During high humidity or after rainy conditions, remove the cover to dry trapped moisture if present. (If the cover is installed over a damp unit it can cause surface rust.)

Ensure that the INSIDE of the cover is DRY before putting it back on the grill.

## CONTROL PANEL REMOVAL

1. **Ensure the grill is completely cool and the power supply is disconnected.**
2. Remove the cooking grids and warming rack.
3. Partially slide the drip tray out (to support the control panel when removed).
4. Loosen the nuts underneath the control panel with a 11/32" wrench, then lift the panel until it is freed from the screws. Carefully rest the panel on the drip tray. Reference Fig. 22-1.

**Important:** When opening, take caution to not damage any wiring.

5. If wire disconnections are required, reference the wire diagram in the MODEL SPECIFICATIONS section in this instruction manual or the wire diagram label affixed to the inside of the control panel.

**Note:** Secure any disconnected wires (coming from the inside of the unit) to prevent them from falling in.

**Note:** Whenever reconnecting any wires, apply a small amount of dielectric grease to the male connector, then make the connection. This will ensure conductivity and prevent moisture from affecting the contact.

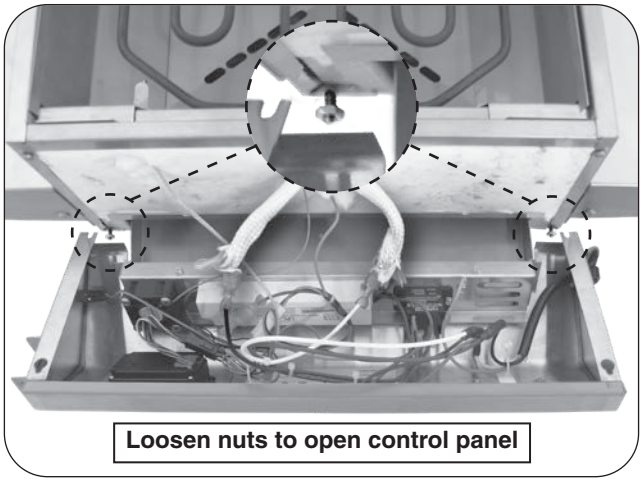


**Fig. 22-1** Remove control panel

## INNER LINER REMOVAL

1. **Ensure the grill is completely cool and the power supply is disconnected.**
2. Remove the warming rack and cooking grids.
3. Grasp the cool cooking element, lift upward and apply pressure towards the right of the grill. Once it clears the support tab, completely raise it up (Fig. 22-2).
4. Lift the two side liners up and out (Fig. 22-3).
5. Lift the rear liner slightly up to clear the support tab, then forward and out (Fig. 22-4).
6. Move the front liner slightly toward the back of the grill, then lift up and out (Fig. 22-5).

To reinstall, reverse the steps above.

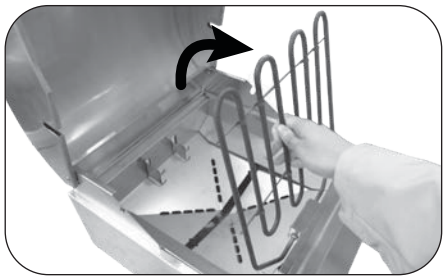

**Fig. 22-2** Raise element upward

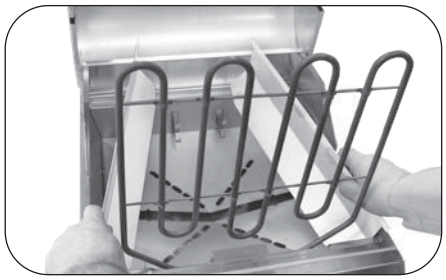

**Fig. 22-3** Remove side liners

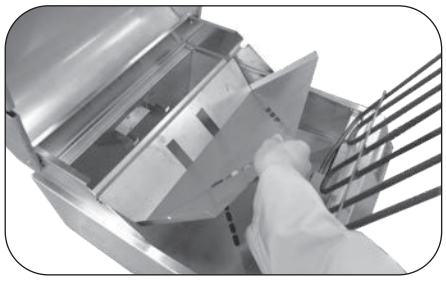

**Fig. 22-4** Remove rear liner

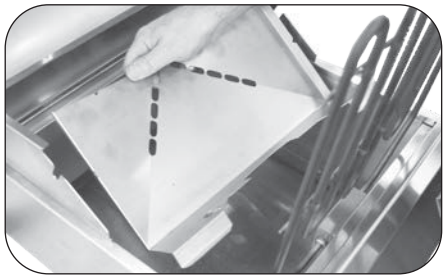

**Fig. 22-5** Remove front liner

# TROUBLESHOOTING

If you have trouble with the unit, please use this list to identify the problem. By trying one or more of the solutions to the possible cause, you should be able to solve the problem. If this list does not cover your present problem, or if you have other technical difficulties with the unit, please contact your local dealer.

| PROBLEM | POSSIBLE CAUSE | CORRECTION |
|---|---|---|
| **Grill does not work** | 1. Power failure<br>2. Power not plugged correctly<br>3. GFCI plug may be tripped | 1. Check if power is available.<br>2. Make sure the power cord plug is properly inserted into the receptacle.<br>3. Reset switches on the GFCI receptacle. |
| **Thermometer does not work** | 1. No power to unit<br>2. Faulty component | 1. Ensure power is available.<br>2. Contact your dealer. |
| **Cooking element does not work** | 1. No power to unit<br>2. Bad element | 1. Ensure power is available.<br>2. Contact your dealer. |

# WARRANTY

## PETERSON FIRE MAGIC GRILLS AND ACCESSORIES

### LIMITED WARRANTY

Robert H. Peterson Co. ("RHP") warrants your Fire Magic® grill to be free from defects in material and workmanship.

Fire Magic® cast stainless-steel gas burners, Choice stainless steel U-shaped burners, cooking grids, and stainless steel housings are warranted as long as you own your Fire Magic® grill **-- LIFETIME**. (Except as described below.)

Fire Magic® valves, manifold assemblies, inner liners, porcelain housings (including ovens and barbecue faces), and **backburner assemblies** (except ignition parts) are warranted for **FIFTEEN (15) YEARS**.

Fire Magic® Electric Grill stainless steel cooking grids and stainless steel housings are warranted for **TEN (10) YEARS**.

Fire Magic® built-in and portable griddles (except ignition system) are warranted for **TEN (10) YEARS**. (Except as described below.)

Fire Magic® Infra-red burners, flavor grids, and charcoal stainless steel grills are warranted for **FIVE (5) YEARS**; except for the charcoal pan, charcoal grid, thermometer, and ash catch tray, which are warranted for **ONE (1) YEAR**.

Fire Magic® sideburners, exterior Glass Fiber Reinforced Concrete (GFRC) grill island systems, and all other grill components (except ignition systems and electronic parts) are warranted for **THREE (3) YEARS**.

Fire Magic® grill and griddle ignition systems (excluding batteries), electronic components (including lights and thermometers), and grill accessories are warranted for **ONE (1) YEAR**.

**A COPY OF YOUR SALES SLIP FOR PROOF OF PURCHASE IS REQUIRED**

This warranty applies to the original purchaser for products which are installed in the United States or Canada and which are operated and maintained as intended for single family residential usage. This warranty is valid only with proof of purchase, commence on the date of purchase, and terminates (both as to original and any replacement products) on the anniversary date of the original purchase of the product per the above schedules.

This warranty covers defects in material and workmanship. This warranty **does not** cover parts which become defective as a result of negligence, misuse, use not in compliance with the Installation and Owner's Manual, accidental damage, improper handling, improper storage, improper installation, **lack of required routine maintenance** (as specified in the Installation and Owner's Manual), or electrical damage. Product must be installed as specified in the Installation and Owner's Manual by a **qualified professional installer**. Modifications to products which are not specifically authorized will void this warranty. Accessories, parts, valves, remotes, etc. when used must be Peterson products or this warranty is void. Warrantied items will be repaired or replaced at Peterson's sole discretion. This warranty **does not** apply to rust, corrosion, oxidation, or discoloration unless the affected part becomes inoperable.

This warranty **does not** cover labor or labor related charges, except as provided by separate specific written programs from the Peterson Co. All repair work must be performed by a qualified professional service person and requires prior approval of Peterson.

Peterson may require the defective product or part to be returned to the factory to determine the cause of failure. Peterson will pay freight charges if the product or part is determined to be defective. This warranty does not cover breakage in shipment from our (Independent) distributor to its customer if the damage is determined to have occurred during that shipment.

This warranty specifically excludes liability for **indirect**, **incidental**, or consequential damages. Some states and provinces do not allow the exclusion or limitation of incidental or consequential damages, so the above exclusion may not apply to you. This warranty gives you specified legal rights, and you may have other rights that vary from state to state or province.

For additional information regarding this warranty, or to place a warranty claim, contact the R. H. Peterson dealer where the product was purchased.

When contacting your Peterson dealer or the R. H. Peterson Co., please provide the following information:

- Your name, address, telephone number, e-mail
- Sales receipt showing where purchased and date purchased
- Model number, serial number of product, date code
- Relevant information: installer, additions, repairs, when defect was first noted

**TO REGISTER YOUR PRODUCT ONLINE GO TO: WWW.RHPETERSON.COM, AND CLICK ON PRODUCT REGISTRATION. THANK YOU FOR YOUR PURCHASE.**

| **Quality Check** | **Date:**_____ | | |
|---|---|---|---|
| **Electrical Leak Test:** | _____ | **Burn Test:** | _____ |
| **Model#:** | _____ | **Serial#:** | _____ |
| **Inspector:** | _____ | | |