FIREMAGIC

GFRC ISLAND (STANDARD MODELS)

Model #s: I(D,H)430-XX(R,D)-75XX

ASSEMBLY INSTRUCTIONS AND OWNER'S MANUAL

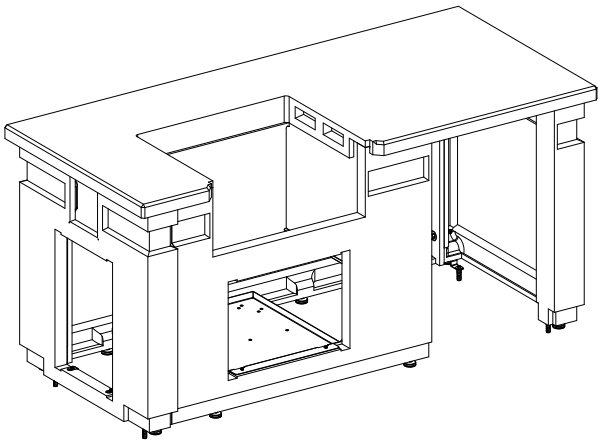

ID430 model shown

INSTALLER: Leave these instructions with consumer.
CONSUMER: Retain for future reference.

IMPORTANT: READ THESE INSTRUCTIONS CAREFULLY BEFORE STARTING INSTALLATION OR USE.

- Only Fire Magic/A.O.G. grills and accessories can be used with this island.
- Fire Magic/A.O.G. grill and accessories are not included. Contact your dealer for ordering information.
- When installing an L.P. cylinder within this island, it must be installed with a Fire Magic Door w/ Tank Tray and Louvers:
  Model #s (2,3)3820-TS(L,R), 53820(H)SC-T(L,R), 23920-1T-S
- **Follow all instructions included with the grill and accessories to be installed into this island.**
- This island design provides all necessary ventilation.
- Adapter kits are available to accommodate additional grills. Contact your dealer for ordering information.

SPECIFICATIONS AND DIMENSIONS

Description	Dimension
	I(D,H)430
Height	36"
Width	76 1/4"
Depth	34 3/4"

Table 1 - Overall Island Dimensions

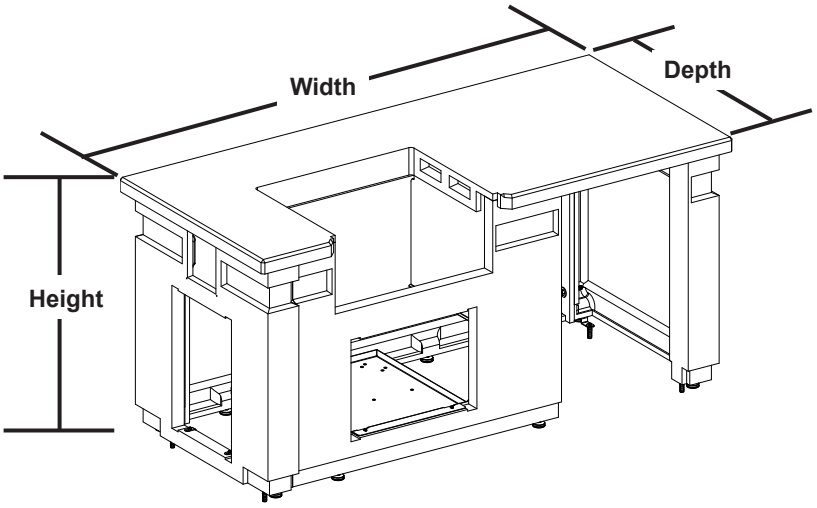

ID430-XXR model shown

SPECIFICATIONS AND DIMENSIONS (Cont.)

Only Fire Magic/A.O.G. grills and accessories can be used with this island**. Below is a list of the options available for each island model. Contact your local dealer for ordering information.**

Item		Option(s)
		I(D,H)430
1.	Grill	A430i, C430i, 24(N,P)B (w/ AD-24D adapter kit)
2. or	Double Drawers Refrigerator	33802, 53802(H)SC 3598, 3598(H)-D(L,R), REF-21
3.	End Panel Door	23820-S, 23920-S, 23920-1-S, 23920-1T-S, 33820-S(L,R), 53820(H)SC-(L,R), 33820-TS(L,R), 53820(H)SC-T(L,R), 33920-S(L,R), 53920(H)SC-(L,R), 33920-1-S(L,R)
4.	Under Grill Access Door	23914-S, 53914SC-(L,R), 33914-S(L,R)
5.	Grill Adapter Kit †	AD-24D [for 24(N,P)B grill]
6.	Stainless Steel Gas Timer Box	5520-11T, 5520-13T

† not shown

Table 2 - Island Options

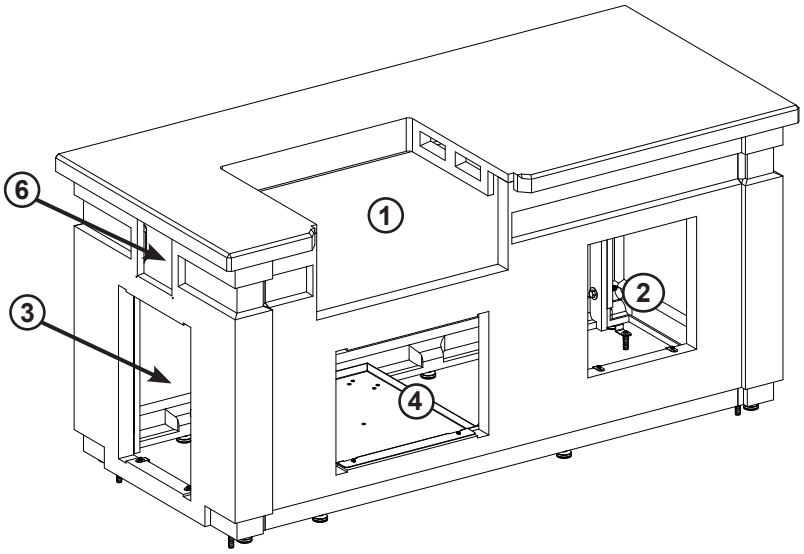

ID430-XXD model shown

PARTS LIST

Item	Description	I(D,H)430-XXD Qty.	I(D,H)430-XXR Qty.
1.	Left side wall (A)	1	1
2.	Rear wall (B)	1	1
3.	Right side wall (C)	1	1
4.	Front wall (D)	1	1
5.	Duplex outlet box assy.	2	2
6.	Heat shield	n/a	1
7.	Countertop	1	1
8.	Floor pan	1	1
9.	Power supply box bracket (w/ Phillips screws)	1	1
10.	Outlet bracket *	1	1
11.	Door bracket (w/ hex screw)	12	8
12.	Leveler bolts	8	8
13.	Floor mounting brackets (w/ hardware)	4	4
14.	Hardware kit A * †	8	6
15.	Timer box screws *	4	4

* not shown
† each kit contains: (1) 1/2"-13 x 3" bolt, (1) nut, (2) washers

- Your island is packaged onto 1 pallet.
- The main pieces are labeled (alphabetically) to assist in identification and assembly.
- Select model is illustrated (your model may vary)

IMPORTANT

Remove all packing material (including any protective coatings) and discard prior to use.

COMPONENTS ARE HEAVY HANDLE WITH CARE

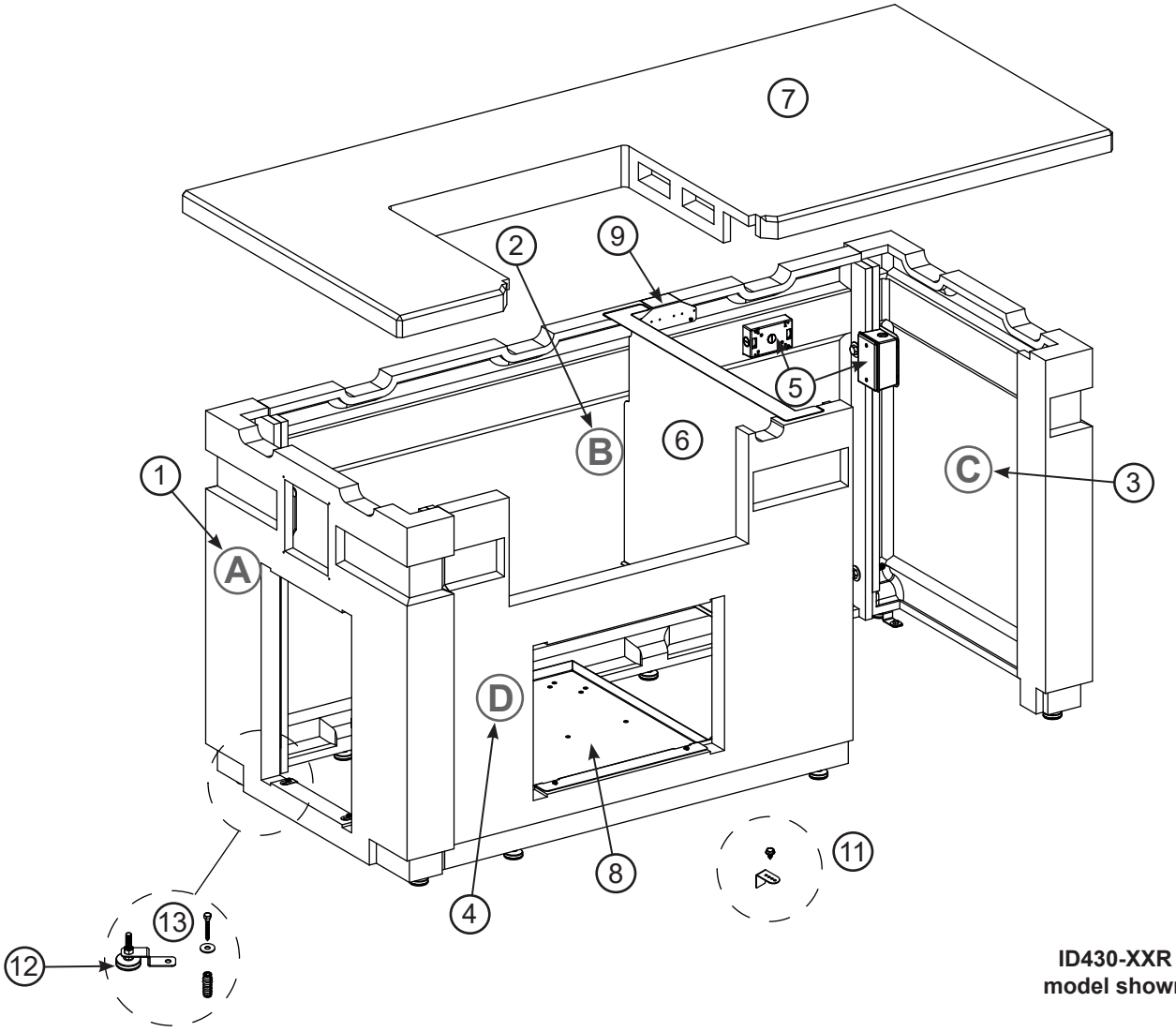

ID430-XXR model shown

ASSEMBLY AND INSTALLATION

WARNING: Failure to position the parts in accordance with these diagrams or failure to use only parts specifically approved with this unit may result in property damage or personal injury.

TOOLS REQUIRED

- $^{7}/_{16}$", $^{1}/_{2}$", $^{9}/_{16}$", $^{3}/_{4}$" open end wrenches
- Power drill with $^{5}/_{16}$" hex driver and #2 Phillips driver
- Level
- Flathead screwdriver

LOCATION

While following all requirements and safety information in the owner's manuals included with your products, determine and prepare the location of the island (a hard and level surface).

Note: A combustible surface is permitted.

Important: **The gas supply and electrical setup must be considered when determining the location of the island. Refer to all owner's manuals included with your products for details (as applicable).**

ASSEMBLY AND INSTALLATION REQUIRES TWO OR MORE PEOPLE. EXERCISE EXTREME CARE DURING ASSEMBLY AND INSTALLATION.

ASSEMBLY AND INSTALLATION OVERVIEW - REFRIGERATOR MODELS

CAUTION: Island components are heavy. CAREFULLY handle all components during assembly.

- Fig. 6-1 provides an overall orientation and bolt assembly detail for the island with refrigerator. (Assembly may slightly vary depending on island selected.)
- **This section is just an overview, refer to the following step-by-step section for complete assembly (and grill/ accessory installation) details.**

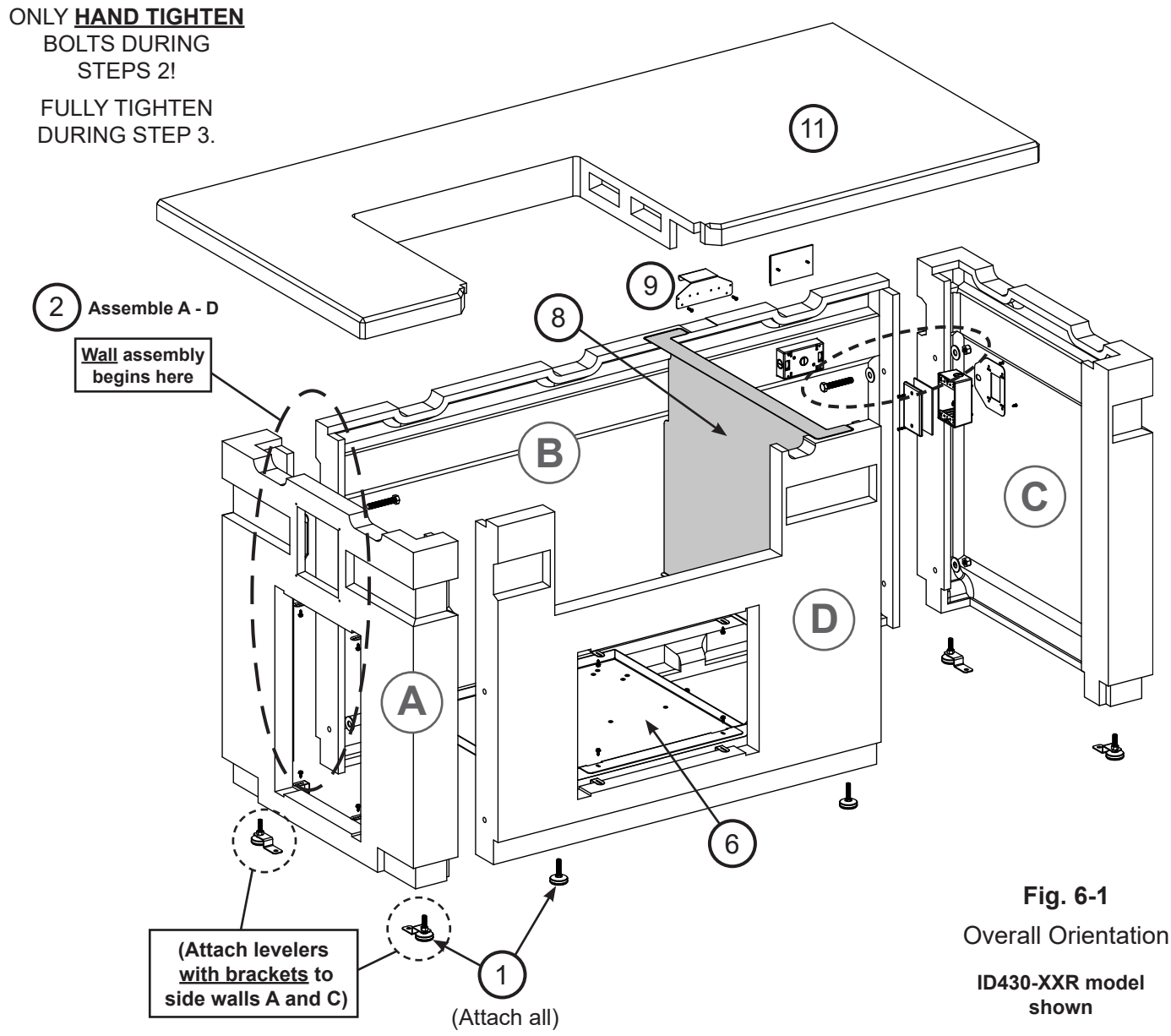

Fig. 6-1
Overall Orientation

ID430-XXR model shown

ASSEMBLY / INSTALL OVERVIEW

1. Attach all levelers
2. Assemble walls (A-D)

Note: *Install outlet box w/ C*

3. Adjust levelers to level top surfaces of unit evenly, ensure unit is square, then fully tighten all bolts *
4. Secure island to floor *
5. Install electrical *
6. Install floor pan
7. Install doors *
8. Place heat shield (if applicable)
9. Install power supply box (only bracket shown)
10. Install refrigerator *
11. Place countertop
12. Install grill and timer box *

*** not shown**

ASSEMBLY AND INSTALLATION OVERVIEW - DOUBLE DRAWER MODELS

CAUTION: Island components are heavy. CAREFULLY handle all components during assembly.

- Fig. 7-1 provides an overall orientation and bolt assembly detail for the island with double drawers. (Assembly may slightly vary depending on island selected.)
- **This section is just an overview, refer to the following step-by-step section for complete assembly (and grill/ accessory installation) details.**

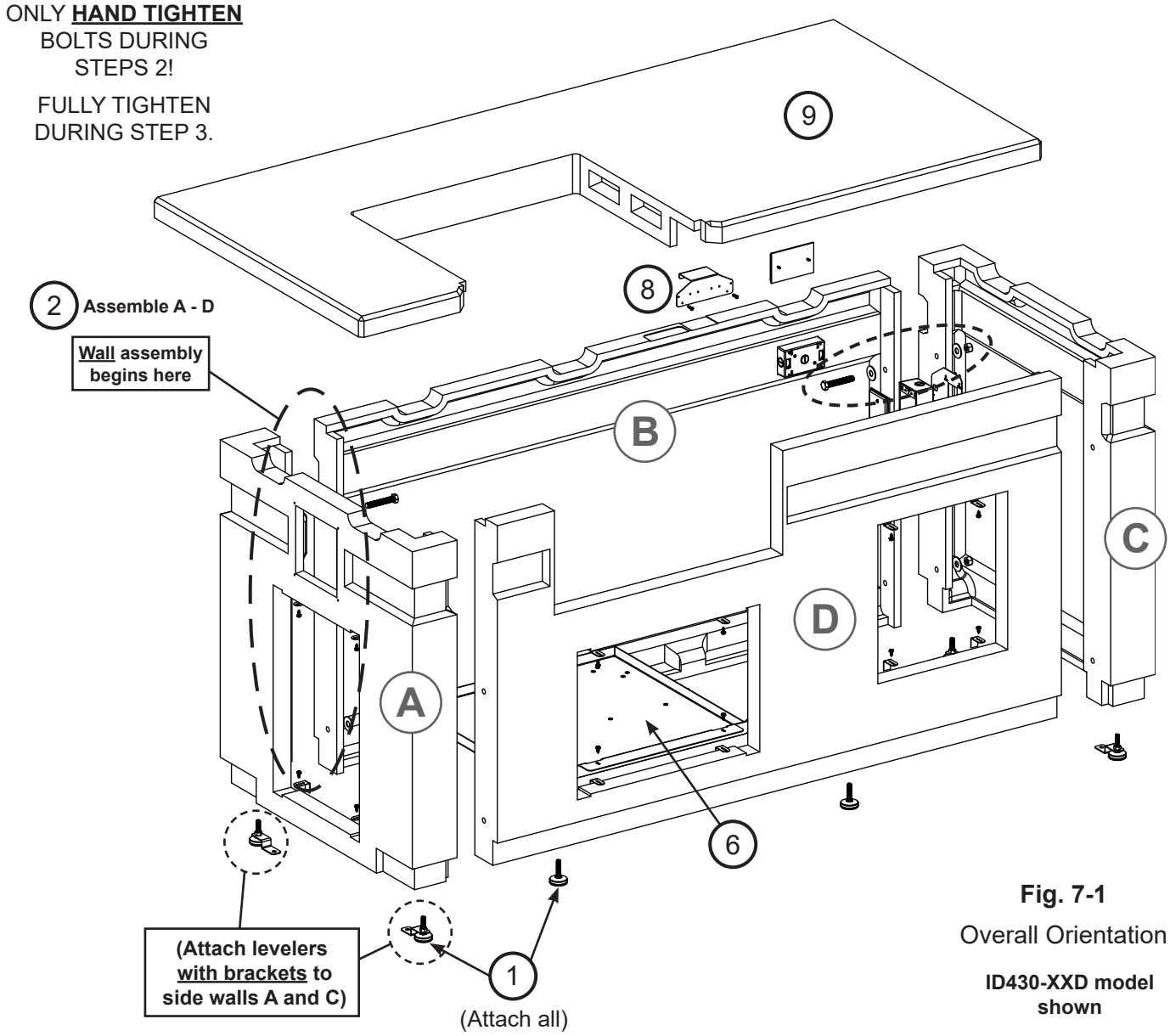

Fig. 7-1
Overall Orientation
ID430-XXD model shown

ASSEMBLY / INSTALL OVERVIEW

1. Attach all levelers
2. Assemble walls (A-D)
   Note: *Install outlet box w/ C*
3. Adjust levelers to level top surfaces of unit evenly, ensure unit is square, then fully tighten all bolts *
4. Secure island to floor *
5. Install electrical *
6. Install floor pan
7. Install drawer and doors *
8. Install power supply box (only bracket shown)
9. Place countertop
10. Install grill and timer box *

*** not shown**

ASSEMBLY AND INSTALLATION - STEP BY STEP

CAUTION: **Island components are heavy. CAREFULLY handle all components during assembly.**

Important: **DO NOT fully tighten any bolts until the island base is leveled and squared. Hand tighten until instructed to fully tighten.**

Note: Various ID430 models are depicted here. Your assembly may slightly vary depending on model selected.

Note: The main pieces are labeled (alphabetically) to assist in identification and assembly.

Attach Levelers

1. Locate the island pieces in an appropriate location (refer back to the LOCATION section if needed).
2. Carefully lay down all pieces that make up the island base and attach the levelers (see Fig. 8-1).

Note: 4 of the levelers have floor mounting brackets pre-installed. Use 2 on each side wall. See Fig. 8-1.

3. Attach the final 2 levelers to the bottom of the floor pan (for future installation).

Important: The levelers are required for ventilation and leveling purposes.

Assemble Left Side (A) and Rear Wall (B)

1. Orient the left side wall (A) and rear wall (B) as shown. Carefully align the pilot holes, and insert the hardware (hardware kit A) in the order shown. Hand tighten only. See Fig. 8-2.

Assemble Right Side Wall (C) and Install Outlet Box

1. Orient the right side wall (C) and repeat the hardware installation process (hardware kit A) for the bottom hardware first. Ensure the top pilot holes are also aligned. Hand tighten only. See Fig. 8-3, step 1.

   An outlet box assembly is provided and requires installation. Assemble the box as shown using a flathead screwdriver, then repeat the hardware installation process to secure both the top of the right wall and the outlet box in place. Hand tighten only. See Fig. 8-3, step 2 and Fig. 8-4.

Note: Covers are provided for any outlets that will not be used (if applicable).

Assemble Front Wall (D)

1. Orient the front wall (D) and repeat the hardware installation process (hardware kit A). Hand tighten only. See Fig. 8-5.

Installation continued on next page

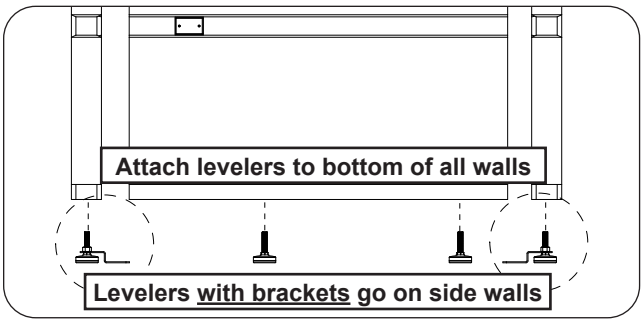

Fig. 8-1 Attach levelers

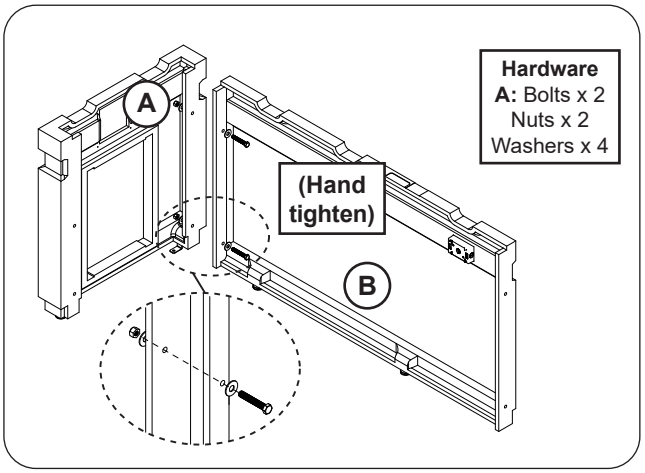

Fig. 8-2 Assemble left side and rear wall

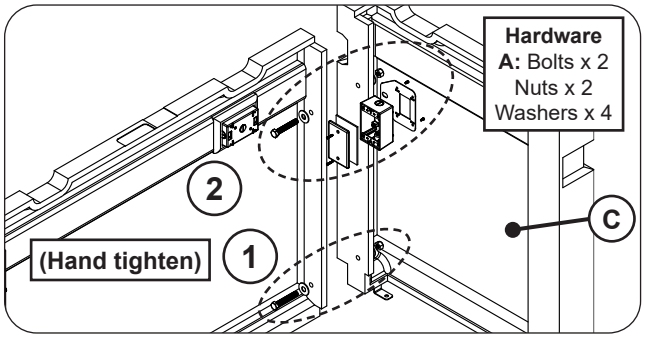

Fig. 8-3 Assemble right side wall and outlet box

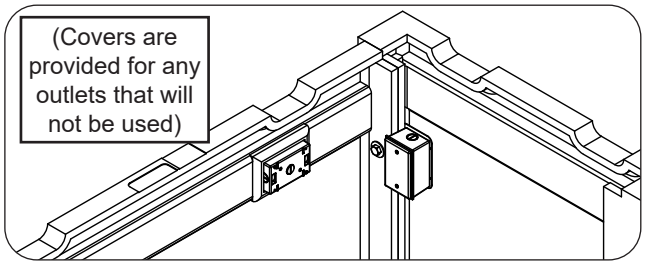

Fig. 8-4 Right side wall and outlet box installed

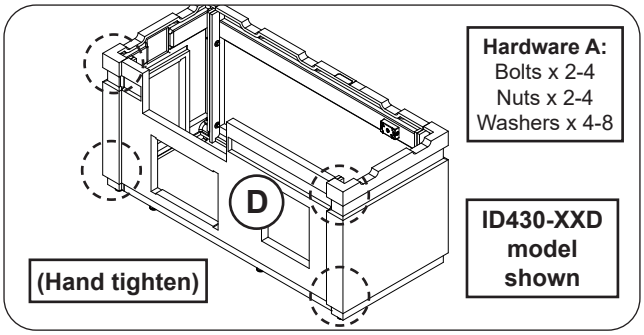

Fig. 8-5 Assemble front wall

Level, Square, & Fully Tighten Island Base

1. Use the level to ensure the top surfaces of the assembly are level. The levelers at the bottom of the island may be adjusted as needed with a ½" open end wrench. See Fig. 9-1.
2. Check for squareness of the island.
   - **a.** Measure the X outer dimension, see Fig. 9-2. It should be approximately 79 ¾".
   - **b.** Measure the Y outer dimension, see Fig. 9-2. Carefully adjust the side walls as needed to ensure the X & Y dimensions are equal. (The final dimension may slightly vary from that mentioned in step a.)
   - **c.** Measure the Z outer dimension, see Fig. 9-2. It should be approximately 30 ½".
3. **Once the assembly is <u>level and square</u>, use the two $^3/_4$" open end wrenches (or equivalent) to fully tighten all hardware. DO NOT OVERTIGHTEN.**

Note: Tightening of the hardware may slightly alter the setup. Check once more to ensure the island is level and square, and adjust if needed.

Secure Island to Floor

1. Secure the island to the floor using the 4 pre-installed mounting brackets. Use a $^7/_{16}$" open end wrench and the supplied mounting hardware as appropriate. See Fig. 9-3, A.

   Finish by tightening down the brackets. Hold a leveler in place (below bracket) with a $^1/_2$" open end wrench, and tighten the nut (above bracket) using a $^9/_{16}$" open end wrench. See Fig. 9-3, B.

Installation continued on next page

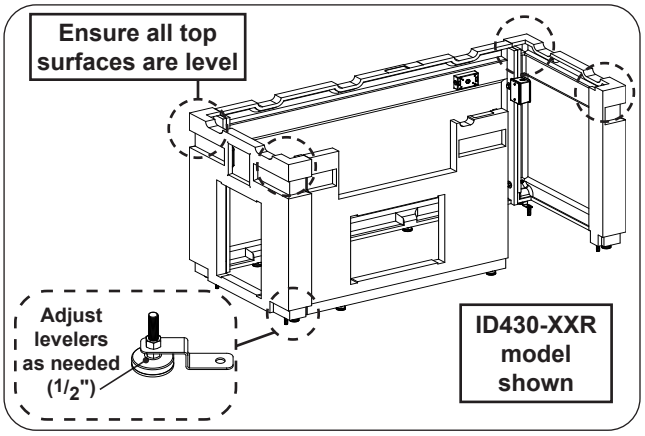

Fig. 9-1 Level assembly

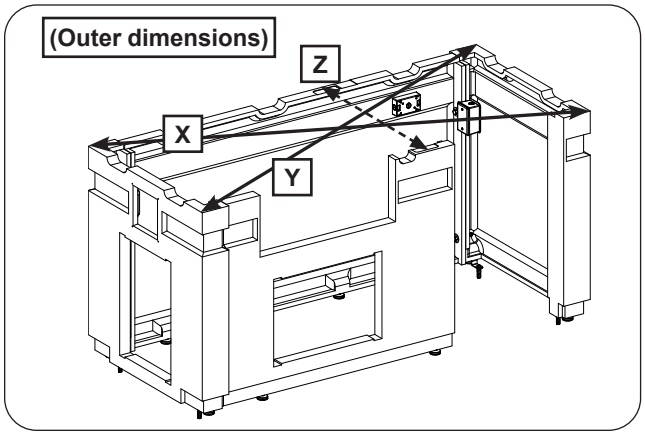

Fig. 9-2 Square unit (then tighten all bolts)

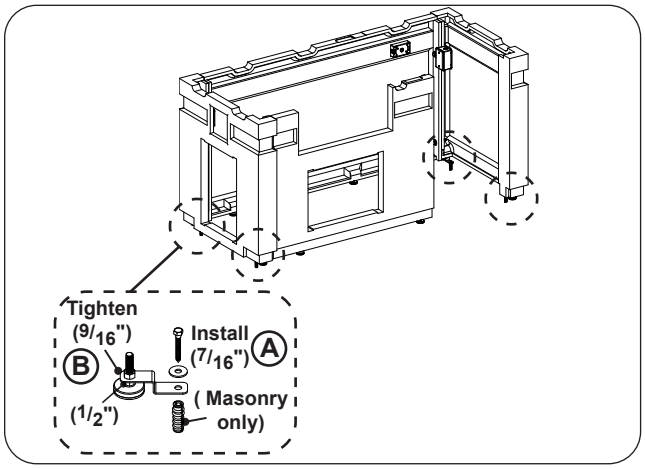

Fig. 9-3 Mount island

Install Electrical

Have a licensed electrician route the electrical setup for your island. Two outlet boxes are available. The primary box is located on the interior of the right wall. An additional box exists at the top of the rear wall. See Fig. 10-1.

Your installation may vary. **Follow all instructions included with the grill and accessories to be installed into this island. Observe the National Electric Code and all local codes.**

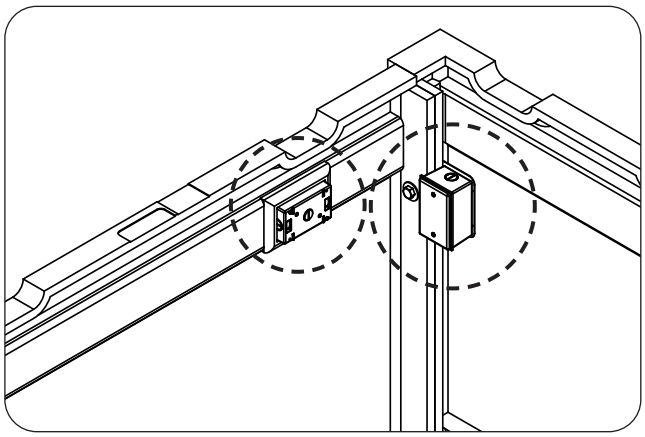

Fig. 10-1 Install electrical (as needed)

Install Floor Pan

1. Place floor pan into the access door cutout as shown (see Fig. 10-2).
2. Use a level to ensure the top of the pan is level. The levelers at the bottom of the pan may be adjusted as needed. The floor pan will be secured during access door installation.

Installation continued on next page

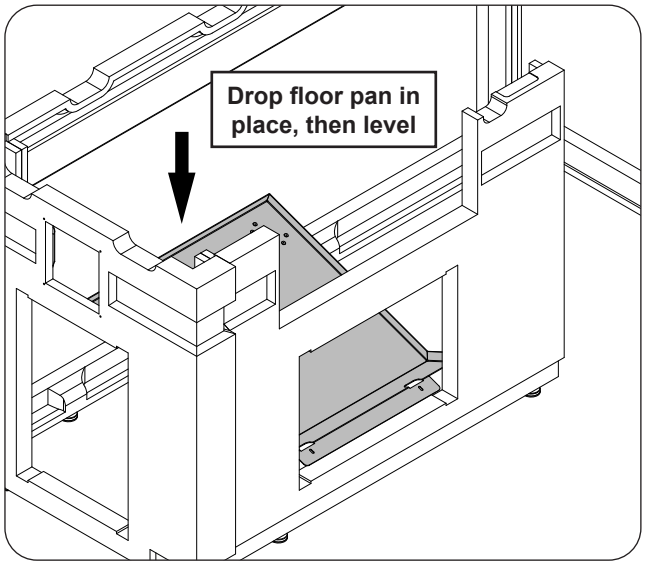

Fig. 10-2 Place floor pan

Install Drawers and/or Doors

The drawers/doors for your island are purchased separately. Review the instructions provided with your accessories.

Brackets are provided for ease of installation in this island. Follow the steps below.

1. Insert your unit completely into the appropriate opening. Ensure it is flush against the exterior wall (see Fig. 11-1 and Fig. 11-2, step 1).
2. The unit will have 2 oblong cutouts (or round holes) on both the top and bottom of its frame. Reach from within the island and insert a bracket where a cutout exists, **below the frame**. See Fig. 11-2, step 2.

Note: When installing the double door ensure the bracket is inserted **below the frame AND floor pan** (see Fig 11-3, step 2).

3. While squeezing the rear of the bracket and the front of the door frame **firmly** against the concrete wall, insert a hex screw and tighten with the power drill and 5/16" hex driver (see Fig. 11-2 or Fig 11-3, step 3). DO NOT OVERTIGHTEN.

Note: Certain models may require a second person to hold the bracket against the concrete wall from within the island enclosure.

4. Repeat this process for the remaining brackets and the remaining drawers/doors in the island.

Note: Only the cutouts in the top and bottom of the frames require brackets.

Installation continued on next page

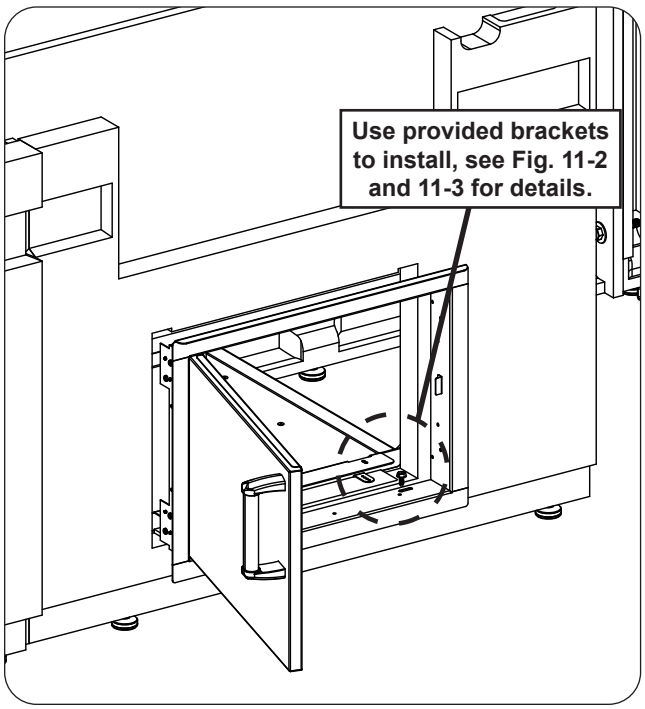

Fig. 11-1 Door / drawer install

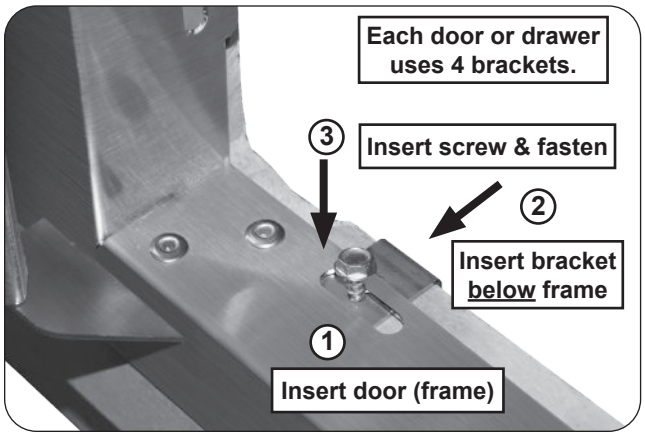

Fig. 11-2 Door / drawer install detail

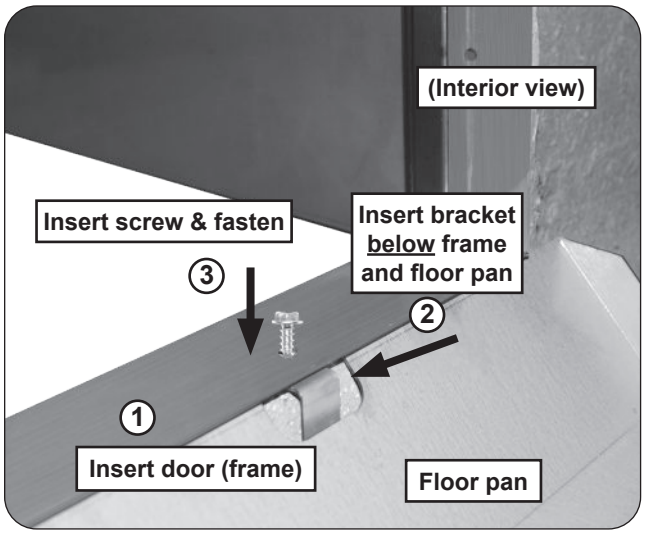

Fig. 11-3 Door / floor pan install detail

Place Heat Shield (if applicable)

Place the heat shield as shown in Fig. 12-1. It will need to be inserted at an angle to clear the island (step 1). Then turn it (within the island slots) until it is perpendicular with the front and rear walls (step 2). Locate the heat shield in place by using the grooves found on the top of the front and rear walls (step 3).

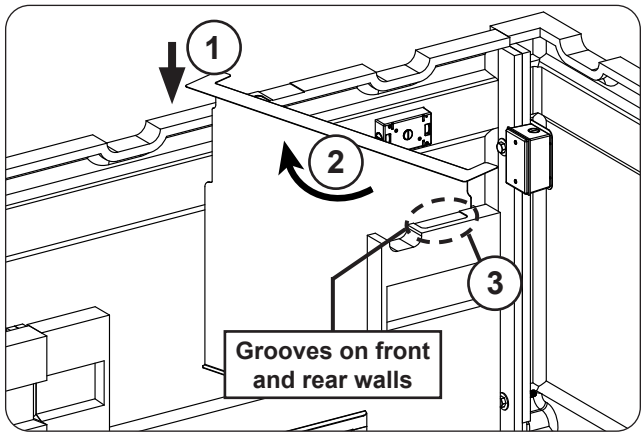

Fig. 12-1 Place heat shield (as applicable)

Install Power Supply Box

A power supply box is included with your grill and requires installation.

CAUTION: Refer to the grill owner's manual for all safety information regarding the power supply box.

A bracket is provided for installation in this island. Follow the steps below.

1. **First** place the power supply box bracket over the rear wall, in the groove just to the left of the outlet box (see Fig. 12-2).
2. Disconnect the power supply harness extension from the grill, then align the pilot holes on the power supply box with the holes on the bracket, then insert the two Phillips screws and tighten with the power drill and #2 Phillips driver (see Fig. 12-2). DO NOT OVERTIGHTEN.

Note: Power supply box design may vary.

3. Once the power supply box is installed, locate the power supply harness extension that is attached to the power supply and route it along the heat shield (if applicable) and into the grill area (for future grill installation). See Fig 12-3.

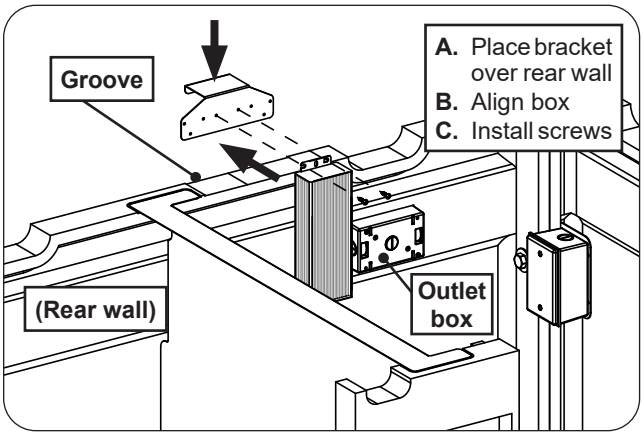

Fig. 12-2 Install power supply box

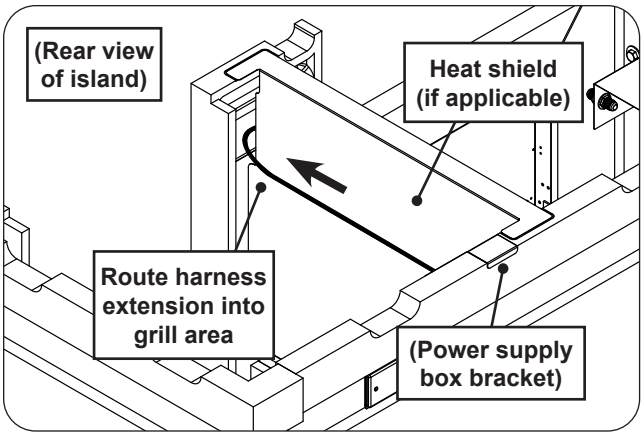

Fig. 12-3 Route power supply box wire

Install Refrigerator (if applicable)

The refrigerator for your island is purchased separately. Follow all instructions provided with your accessory.

In addition to all information found in the owner's manual, simply slide the refrigerator and plug it into the island electrical outlet (see Fig. 12-4).

Installation continued on next page

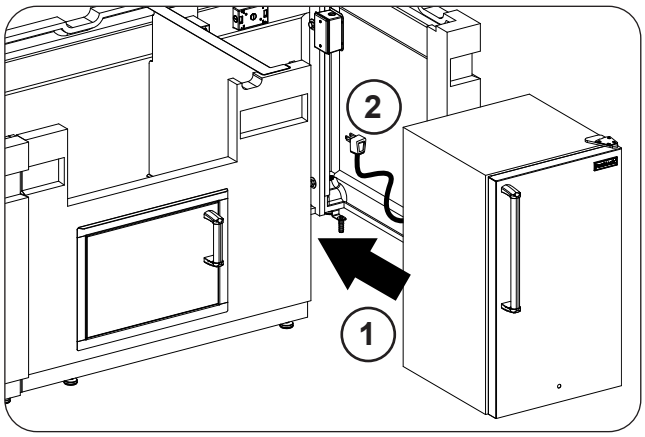

Fig. 12-4 Install refrigerator (as applicable)

Place Countertop

1. Apply silicone along the top of the island (see Fig. 13-1, step 1).
2. Place the countertop onto the island as shown in Fig. 13-1, step 2. (Be sure to align the cutout in the countertop with the opening in the front wall.)

Install Grill and Timer Box (as applicable)

The grill and timer box for your island are purchased separately. Follow all instructions provided with your grill and timer box for installation. See Fig. 13-2 for install locations.

Note: When installing the timer box, use the screws provided with the island.

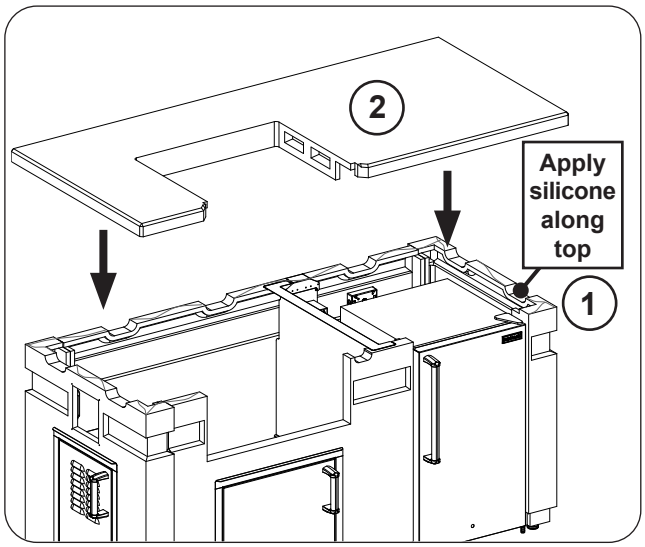

Fig. 13-1 Place countertop

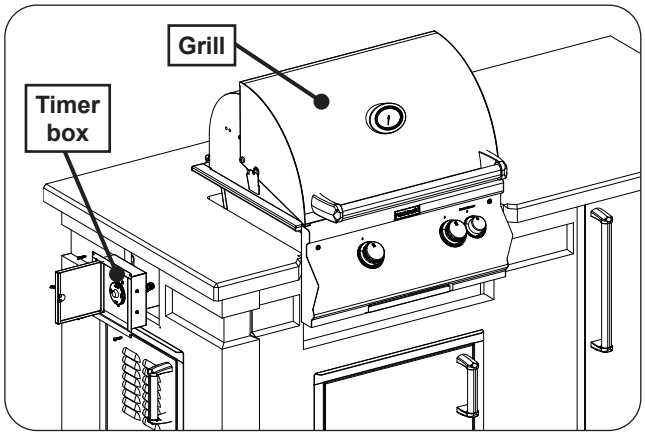

Fig. 13-2 Install grill and timer box

CARE AND CLEANING

- **Keep the vent openings and surrounding area of the of the unit clean and free at all times.**
- For grill and accessory care and cleaning, refer to the owner's manuals provided with the units.

CONCRETE COMPONENTS

As with any surface, concrete components require regular maintenance and care. Certain guidelines must be followed to preserve the concrete's appearance and structural integrity.

- Use trivets to protect your countertop from high-heat.
- **Scratches may occur due to usage.** To minimize, avoid striking or dragging heavy, rough, or sharp objects across the countertop. Use a cutting board when using knives.
- **Spotting and hairline cracks may occur due to the nature of the product and are not considered a manufacturing defect.**
- **Concrete products are porous and susceptible to discoloration from liquids (especially oils and acidic substances).** During use, clean up any spills immediately to prevent any possible staining or damage to the finish. Avoid allowing water (or any liquid / substance) to stand on the surface. Using coasters for drinks is highly recommended.
- After each use, clean up any food particles or debris.
- **To clean the concrete, first wash with a mild soap and water solution. For stubborn stains, a vinyl brush may be used. Allow to dry. Annually, follow up with a masonry sealer in order to preserve the finish.**
- It should be noted that, like natural stone, concrete products will develop a patina when left outside. No two concrete products are identically the same and the finish will vary.