FIREMAGIC

AURORA

STAND-ALONE POST OUTDOOR GAS GRILLS

A430s (IN-GROUND AND PATIO MOUNT)

INSTALLATION AND OWNER'S MANUAL

A430s Patio mount model shown

INSTALLER: Leave these instructions with consumer.
CONSUMER: Retain for future reference.

IMPORTANT: READ THESE INSTRUCTIONS CAREFULLY BEFORE STARTING INSTALLATION OR USE.

SAFETY AND WARNING CODES

⚠ DANGER:

IF YOU SMELL GAS:

1. Shut off the gas to the appliance.
2. Extinguish any open flame.
3. Open lid.
4. If odor continues, keep away from the appliance and ***immediately*** call your gas supplier or the fire department.

ONLY TO BE USED OUTDOORS

CODE AND SUPPLY REQUIREMENTS: This grill must be installed in accordance with local codes and ordinances, or, in the absence of local codes, with either the latest *National Fuel Gas Code (ANSI Z223.1/NFPA 54),* and *Natural Gas and Propane Storage and Handling Installation Code (CSA-B149.1).*

This appliance and its dedicated manual shutoff valve must be disconnected from the gas-supply piping system when testing the system at pressures in excess of ½ psig (3.5 kPa).

This appliance must be isolated from the gas-supply piping system by closing its dedicated manual shutoff valve during any pressure testing of the gas-supply system at pressures up to and including ½ psig (3.5 kPa).

Proper operation of your grill requires prompt and periodic maintenance. See the SERVICING AND CLEANING section for details.

⚠ WARNING:

1. Do not store or use gasoline or other flammable vapors and liquids in the vicinity of this or any other appliance.
2. An LP cylinder not connected for use shall not be stored in the vicinity of this or any other appliance.

⚠ WARNING:

Improper installation, adjustment, alteration, service, or maintenance can cause injury or property damage. For proper installation, refer to the installation instructions. For assistance or additional information, consult a qualified professional service technician, service agency, or the gas supplier.

This appliance is designed as an <u>attended appliance</u>. <u>DO NOT</u> leave this appliance burning when unattended.

All electrical outlets in the vicinity of the grill must be properly grounded in accordance with local codes, or, in the absence of local codes, with the *National Electrical Code, ANSI/NFPA 70,* or the *Canadian Electrical Code, CSA C22.1,* whichever is applicable.

Keep all electrical-supply cords and fuel-supply hoses away from any heated surface.

Cooking Grid U.S. Patent Nos. D857,453 D862,984

PFS C US

Certified to: ANSI Z21.58 CSA 1.6

INSTALLATION INSTRUCTIONS ET MANUEL DU PROPRIÉTAIRE

GRIL EXTÉRIEUR DE GAZ

IMPORTANT: LISEZ CES INSTRUCTIONS SOIGNEUSEMENT AVANT DE COMMENCER L'INSTALLATION OU L'UTILISATION

SÛRETÉ ET CODES D'AVERTISSEMENT

⚠ DANGER:

SI VOUS SENTEZ LE GAZ :

1. Coupez le gaz à l'appareil.
2. Éteignez-vous n'importe quelle flamme nue.
3. Ouvrez le couvercle si équipé d'un four.
4. Si l'odeur continue, gardez loin de l'appareil et appelez immédiatement votre département de fournisseur ou de feu de gaz.

⚠ AVERTISSEMENT:

1. Ne stockez pas ou n'employez pas l'essence ou d'autres vapeurs et liquides inflammables à proximité de ceci ou d'aucun autre appareil.
2. Un cylindre de propane non relié pour l'usage ne sera pas stocké à proximité de ceci ou d'aucun autre appareil.

À UTILISER UNIQUEMENT À L'EXTÉRIEUR

CONDITIONS DE CODE ET D'APPROVISIONNEMENT: Ce gril doit être installé selon des codes et des ordonnances locaux, ou, en l'absence des codes locaux, avec l'un ou l'autre le plus défunt *Code national de gaz de carburant* (norme ANSI Z223.1/NFPA 54), et *Stockage de gaz naturel et de propane et manipulation du code d'installation* (CSA-B149.1).

Cet appareil et ses différents robinets d'isolement doivent être démontés du gaz-fournissent le système sifflant en examinant le système aux pressions au-dessus du ½ psig (kPa 3.5).

Cet appareil doit être isolé dans gaz-fournissent le système sifflant par fermeture que ses différents robinets d'isolement manuels pendant tous les essais sous pression du gaz-fournissent le système aux pressions jusques et y compris le ½ psig (kPa 3.5).

- Ce gril est pour ultilisation à l'extérieur seulement. Si l'appareil est entreposé à l'intérieur, enlever les bouteilles et les laisser à l'extérieur.
- Ne pas ranger le gril immédiatement aprés l'avoir utilisé. le laisser refroidir avant de le déplacer ou de la ranger. Le non respect de cette mesure de sécurité pourrait entraîner un incendie causant des dommages à la propriété, des blessures ou la mort.
- Ne pas utiliser cet appareil sous une surface combustible.
- Ne pas utiliser cet appareil sous un auvent. Le non respect de cette mesure de sécurité pourrait entraîner un incendie ou des blessures.
- Dégagement minimal entre les parois latérales et l'arriére de l'appareil et la construction combustible (45.7 cm à partir des parois latérales et 45.7cm à partir de l'arriére).
- Le régulareur de pression de gaz prévu avec cet appareil de cuisson à gaz pour l'extérieur doit être utilisé. Ce régulateur est réglé pour une pression de sortie de 5 pouces de colonne de l'eau pour le gaz naturel, et 10 pouces pour le propane.
- LE RÉGULATEUR INCLUS D'APPAREILS EST ÉVALUÉ POUR LE MAXIMUM DE 1/2 (LIVRES PAR POUCE CARRÉ). SI VOTRE OFFRE DE GAZ EST 1/2 PLUS GRAND QUE (LIVRES PAR POUCE CARRÉ), UN RÉGULATEUR ADDITIONNEL DOIT ÊTRE INSTALLÉ AVANT LE GRIL. VOIR LA SECTION DE CONDITIONS D'OFFRE DE GAZ POUR LA PRESSION APPROPRIÉE D'OFFRE DE GAZ.

⚠ AVERTISSEMENT:

L'installation inexacte, l'ajustement, le changement, le service, ou l'entretien peuvent causer des dommages ou des dégats matériels. Référez-vous à ce manuel. Pour de l'aide ou des renseignements supplémentaires, consulter un technicien professionnel qualifié de service, une agence de service ou le fournisseur de gaz.

- Ne couvrez jamais la surface entière de cuisine ou de gril de gauffreuses ou de casseroles. La surchauffe se produira et les brûleurs ne seront pas très performants quand la chaleur de combustion est emprisonnée au-dessous de la surface à cuire.
- Ne pulvérisez jamais l'eau sur une unité chaude de gaz, comme ceci peut endommager des composants de porcelaine ou de fer de fonte.
- Une fuite de GPL peut causer une incendie ou une explosion si enflammée entraînant des blessures corporelles graves ou la mort.
- Communiquez avec le fournisseur de GPL pour les réparations ou pour disposer de qules bouteille ou du GPL non utilisé.

Cet appareil est conçu comme un <u>appareil surveillé</u>. <u>NE laissez PAS</u> cet appareil brûler sans surveillance.

Toutes les sorties électriques à proximité du gril doivent être correctement fondues selon des codes locaux, ou en l'absence de local code, avec le code électrique national, ANSI/NFPA 70, ou le code électrique canadien, CSA C22.1, celui qui est applicable.

Maintenez tout électrique-fournissent des cordes et carburant-fournissent des tuyaux partis de n'importe quelle surface de chauffage.

Certifié à la norme: ANSI Z21.58 / CSA 1.6

Grille de cuisson Numéros de brevets américains:
D857,453 D862,984

INSTALLATEUR : Laissez ces instructions avec le consommateur.
CONSOMMATEUR : Maintenez pour la future référence.

CONTENTS

GETTING STARTED

INSTALLATION, OPERATION, AND SAFETY INFORMATION 4
ELECTRICAL CONNECTIONS 4
GAS SAFETY INFORMATION 5
WARNING 5
WHEN USING PROPANE GAS 5
WHEN USING NATURAL GAS 5
INSTALLATION SAFETY GUIDELINES 5
OPERATING THE UNIT SAFELY AND CORRECTLY 5
SAFE USE & MAINTENANCE OF PROPANE GAS CYLINDERS 7
INSTALLATION REQUIREMENTS 8
OVERHEAD CONSTRUCTION AND EXHAUST HOOD REQUIREMENTS 8
REAR WALL CLEARANCES 9
SIDE WALL / CORNER WALL CLEARANCES (if applicable) 9
COMBUSTION AIR AND COOLING AIRFLOW 10
GAS-SUPPLY PLUMBING REQUIREMENTS 10
ELECTRICAL SAFETY 11
MODEL SPECIFICATIONS 12
POST GRILL WIRING DIAGRAM 12
AURORA GRILL REPLACEMENT PARTS LIST 15

INSTALLATION

PATIO MOUNT INSTALLATION 17
IN-GROUND POST INSTALLATION 20
INSTALL THE FLAVOR GRIDS 24
INSTALL THE COOKING GRIDS 24
INSTALL THE DRIP TRAY 24
INSTALL THE RIGID SHELVES 25

USE, CARE, & SERVICE

IDENTIFICATION OF GRILL CONTROLS 26
USING THE GRILL 27
LIGHTING (IGNITION) INSTRUCTIONS 29
ELECTRONIC LIGHTING 29
SETTING THE TIMER 29
MANUAL LIGHTING 29
SHUTTING OFF THE UNIT 29
OPTIONAL ROTISSERIE INSTRUCTIONS 30
OPTIONAL INFRARED BURNER OPERATION 31
SERVICING AND CLEANING 32
CLEANING YOUR GRILL 32
REPLACING HALOGEN BULBS 34
CONTROL PANEL REMOVAL 35
SYSTEM RESET 36
MAIN BURNER REMOVAL 36
INFRARED BURNER REMOVAL (if equipped) 36
CONVERT GAS TYPE / CHECK BURNER ORIFICES 37
AIR SHUTTER ADJUSTMENT / BURNER FLAME INSPECTION 39
VALVE "LOW" SETTING ADJUSTMENT 41
NOTES PAGE 42
TROUBLESHOOTING 43
WARRANTY 44
COMMONWEALTH OF MASSACHUSETTS REQUIREMENTS 44

INSTALLATION, OPERATION, AND SAFETY INFORMATION

1. The outdoor appliance and surrounding area MUST remain clear of flammable substances such as gasoline, yard debris, wood, etc. Maintain a minimum horizontal clearance of 18" (in all directions) from combustible materials/items.
2. Do not block the 1" front air inlet along the bottom of the control panel. See the COMBUSTION AIR AND COOLING AIRFLOW section under INSTALLATION REQUIREMENTS for details.
3. **This unit must be installed so that the vent openings and surrounding area of the grill remain clear and free at all times. See the GAS SAFETY INFORMATION section.**
4. **When using propane gas: the propane cylinder, regulator, and rubber hose must be in a location not subject to temperatures above 125° F (51° C).**
5. The back burner cover or infrared burner cover (if equipped) must be removed before using the burner.
6. The flames on each burner burn evenly along the entire burner with a steady flame (mostly blue). If burner flames are not normal, check and clean the orifice and burner/venturi tubes for insects and insect nests. A clogged tube can lead to a fire beneath the unit. A proper flame pattern will ensure safe operation and optimal performance. Adjust the air shutter as needed (see AIR SHUTTER ADJUSTMENT section).
7. The in-line gas valve or gas cylinder valve must always be shut OFF when the unit is not in use.
8. The drip collector holes and air baffle(s) must be clear and unobstructed. Excessive grease deposits can result in a grease fire.

   If lining the interior firebox with aluminum foil (not recommended), DO NOT block the drip collector holes, air baffle(s), or any ventilation louvers as this will cause a grease fire and/or cause the unit to over heat.
9. Whenever reconnecting any wires, apply a small amount of dielectric grease to the male connector, then make the connection. This will ensure conductivity and prevent moisture from affecting the contact.
10. Wear gloves and use extreme caution whenever installing and handling this product and its accessories as certain components have sharp edges that can cause personal injury.
11. **Adults MUST be present when this gas appliance is operating. This appliance MUST NOT be left burning when unattended.**

IMPORTANT

IN THE EVENT OF A GREASE FIRE, IMMEDIATELY SHUT OFF THE MAIN GAS VALVE TO THE UNIT. KEEP THE LID OPEN AND ALLOW THE FIRE TO EXTINGUISH ITSELF. KEEP AT A SAFE DISTANCE. A THOROUGH INSPECTION BY A QUALIFIED PROFESSIONAL SERVICE TECHNICIAN SHOULD BE CONDUCTED BEFORE FUTURE USE OF YOUR UNIT. THE SERVICE TECHNICIAN WILL CHECK THE SYSTEM FOR GAS LEAKS AND WILL CHECK ALL ELECTRICAL WIRING FOR DAMAGE. ALL GAS LEAKS AND WIRING MUST BE REPAIRED PRIOR TO FUTURE USE.

WARNING: NEVER cover more than 75% of the cooking or grill surface with griddles or pans. Overheating will occur, and burners will not perform properly when combustion heat is trapped below the cooking surface.

The unit serial number tag can be found affixed to the grill body behind the control panel (on an aluminum tag) and on the underside of the drip tray handle (on a thermal label). It is recommended that the drip tray first be removed and cleaned / emptied of its contents, then turned over to view. The unit rating label is located inside of the control panel.

ELECTRICAL CONNECTIONS

A **120VAC (15 AMP minimum) GFCI GROUNDED 3-wire receptacle** (not included) is required within the vicinity of the unit to provide power to it. The GFCI receptacle must be a WEATHER-PROOF IN-USE COVERED RECEPTACLE.

- **Observe the National Electric Code and all local codes.**
- **Verify proper polarity of the receptacle.**
- **If an extension cord is used, ensure it is a 3-wire GROUNDED cord that is rated for the power of the equipment, and is approved for outdoor use with a W-A marking. DO NOT use 2-prong adapters.**
- **DO NOT TAMPER WITH THE EXTENSION CORD OR THE UNIT POWER-SUPPLY CORD.**

Important: ONLY REPLACE THE INTERIOR OVEN LIGHTS WITH 12V / 10 WATT HALOGEN BULB(S).

GAS SAFETY INFORMATION

WHEN OPERATING THIS GAS APPLIANCE, ALL INSTRUCTIONS AND WARNINGS MUST BE OBSERVED. FAILURE TO DO SO MAY RESULT IN A FIRE OR EXPLOSION CAUSING PROPERTY DAMAGE, BODILY INJURY, OR DEATH.

WARNING

This appliance MUST be installed and operated according to the information below.

FAILURE TO PROPERLY VENT THE PROPANE TANK MAY RESULT IN A FIRE OR EXPLOSION CAUSING PROPERTY DAMAGE, BODILY INJURY, OR DEATH.

A leaking gas connection or valve unintentionally left open will create a hazard.

WHEN USING PROPANE GAS

- **Propane gas** (also known as **L.P. gas**) is heavier than air and will accumulate or pool in an inadequately vented area or recessed area.
- If a pool of **propane gas** is ignited, an explosion will occur. Adequate venting at the floor level of the propane tank eliminates this danger.
- DO NOT store a spare propane-gas cylinder near the unit.

WHEN USING NATURAL GAS

- **Natural gas** is lighter than air and will accumulate at the top of an inadequately vented area.
- If an accumulation of **natural gas** is ignited, an explosion will occur. Adequate venting will eliminate this danger.

INSTALLATION SAFETY GUIDELINES

THIS UNIT MUST BE INSTALLED SO THAT THE AREA AROUND THE UNIT AND PROPANE TANK REMAIN CLEAR AND FREE AT ALL TIMES.

The gas cylinder, regulator, and rubber hose must be in a location not subject to temperatures above 125° F (51° C).

IF A PROPANE CYLINDER IS INSTALLED, THE GUIDELINES FOUND IN THE **SAFE USE & MAINTENANCE OF PROPANE GAS CYLINDERS** SECTION MUST BE FOLLOWED.

OPERATING THE UNIT SAFELY AND CORRECTLY

Every time you use the unit, **make sure that:**

1. The area around the unit is clear and free from combustible materials, gasoline and flammable vapors/liquids.
2. There is no blockage of the airflow around the unit and propane tank.
3. The hose is inspected (if applicable). See SAFE USE & MAINTENANCE OF PROPANE-GAS CYLINDERS section.

DO NOT store any combustible materials, gasoline, and any other flammable vapors/liquids in the vicinity of the unit. Provide adequate clearance for servicing and operation.

UTILISATION SÛRE ET ENTRETIEN DES CYLINDRES DE GAZ DE PROPANE

IMPORTANT POUR VOTRE SÛRETÉ

LISEZ ET SUIVEZ TOUS LES AVERTISSEMENTS ÉQUIPÉS DE VOTRE CYLINDRE DE GAZ DE PROPANE.

En actionnant cet appareil avec un cylindre de gaz de propane ON DOIT observer ces instructions et avertissements.

LE MANQUE DE FAIRE AINSI PEUT AVOIR COMME CONSÉQUENCE UNE INCENDIE OU UNE EXPLOSION SÉRIEUSE.

CYLINDRE ET CONDITIONS ET CARACTÉRISTIQUES DE CONNECTEUR

a. Les bouteilles, les vannes et les tuyaux de propane doivent être entretenus et inspectés avant chaque utilisation. Ils doivent être remplacés en cas de dommages visibles. Si le tuyau est coupé ou présente des signes d'abrasion ou d'usure, il doit être remplacé avant utilisation (**voir e.**).

b. Cette unité, lorsqu'elle est utilisée avec une bouteille, doit être connectée à une bouteille standard de gaz propane de 5 gallons (20 lb) équipée d'un dispositif anti-débordement répertorié. L'appareil est obligatoire sur toutes les bouteilles vendues depuis le 1er octobre 1998 afin d'empêcher tout remplissage excessif.

c. Les dimensions du cylindre doivent être d'environ 12 "(30,5 cm) de diamètre et 18" (45,7 cm) de hauteur. Les bouteilles doivent être construites et marquées conformément aux spécifications du ministère des Transports (DOT) pour les bouteilles à gaz LP ou à la norme relative aux bouteilles, sphères et tubes pour le transport des marchandises dangereuses et à la Commission, CAN / CSA-B339, selon le cas.

d. Le cylindre doit inclure un collier pour protéger la valve de cylindre et le circuit d'alimentation de cylindre doit être assuré le retrait de vapeur.

e. Le régulateur de pression et l'ensemble de tuyau utilisé doivent assortir les spécifications pour le type I par ANSI Z 21.58/CGA 1.6 (voir la figue. 6-1).

f. La valve de cylindre de gaz de propane doit être équipée d'un dispositif d'accouplement de raccordement de cylindre, décrit comme type I dans la norme définie dans le e. de paragraphe ci-dessus. Ce dispositif est généralement décrit comme coupleur de fil de point culminant.

g. Si votre cylindre de gaz de propane vient avec une prise de la poussière, placez le bouchon anti-poussière sur la sortie de valve de cylindre toutes les fois que le cylindre n'est pas en service.

OPÉRATION DE COUPLEUR

Pour relier le regulator/hose à l'ajustage de précision de valve de cylindre de gaz de propane: Serrez l'écrou de main sur le régulateur au-dessus de l'ajustage de précision de fil de point culminant sur la valve de cylindre. Tournez l'écrou de main dans le sens des aiguilles d'une montre pour engager les fils et pour serrer jusqu'à ce que douillettement. L'utilisation des pinces ou de la clé ne devrait pas être nécessaire. Seulement le propane marqué par cylindres doit être employé.

Pour débrancher: Tournez l'écrou de main dans le sens contraire des aiguilles d'une montre jusqu'à isolé (fig. 6-1).

Important: Avant d'employer le unité, et ensuite chaque fois que le cylindre est enlevé et rattaché, examinez tous les raccordements pour déceler les fuites. Arrêtez les valves de unité et ouvrez la valve principale de cylindre, puis vérifiez les raccordements avec de l'eau savonneux. Réparez toutes les fuites avant d'allumer le unité.

ATTENTION: Tournez toujours la valve principale de cylindre de propane au loin après chaque utilisation, et avant de déplacer le unité et le cylindre, ou débrancher l'accouplement. Cette valve doit rester fermée et le cylindre a débranché alors que l'appareil n'est pas en service, quoique l'écoulement de gaz soit arrêté par un dispositif de sûreté quand le coupleur est débranché.

Inspectez soigneusement l'ensemble de tuyau chaque fois avant que le gaz soit allumé. Un tuyau fissuré ou effiloché doit être immédiatement remplacé.

Si l'appareil est stocké à l'intérieur, le cylindre doit être disconnected et a enlevé. Des cylindres Disconnected doivent être stockés dehors, hors de la portée des enfants, avec les prises de valve filetées étroitement installées, et ne doivent pas être stockés dans un bâtiment, le garage, ou n'importe quel autre secteur inclus.

POUR VOTRE SÛRETÉ

a. Ne stockez pas un cylindre de gaz disponible de propane dessous ou ne vous approchez pas de cet appareil.

b. Ne remplissez jamais cylindre au delà de 80 pour cent de plein.

c. SI L'INFORMATION DANS "A" ET "B" N'EST PAS SUIVIE EXACTEMENT, UN FEU CAUSANT LA MORT OU DES DOMMAGES SÉRIEUX PEUT SE PRODUIRE.

Fig. 6-1 type coupleur de fil de point culminant d'l

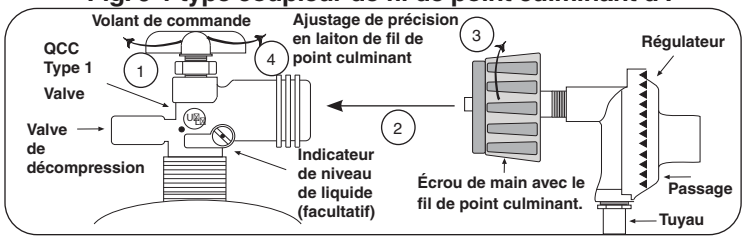

SAFE USE & MAINTENANCE OF PROPANE GAS CYLINDERS

IMPORTANT FOR YOUR SAFETY

READ AND FOLLOW ALL WARNINGS PROVIDED WITH THE PROPANE-GAS CYLINDER.

When operating this appliance with a propane-gas cylinder, these instructions and warnings **MUST** be observed.

FAILURE TO DO SO MAY RESULT IN A SERIOUS FIRE OR EXPLOSION.

CYLINDER/CONNECTOR REQUIREMENTS

a. Propane-gas cylinders, valves, and hoses must be maintained in good condition and inspected before each use of appliance. They must be replaced if there is any visible damage. If hose is cut or shows excessive abrasion or wear, it must be replaced before using appliance (see **e**.).

b. This unit, when used with a cylinder, should be connected to a standard 5-gallon (20 lb.) propane-gas cylinder equipped with a listed overfilling prevention device. The device has been required on all cylinders sold since October 1,1998, to prevent overfilling.

c. Cylinder dimensions should be approximately 12" (30.5 cm) in diameter and 18" (45.7 cm) high. Cylinders must be constructed and marked in accordance with the U.S. Department of Transportation (D.O.T.) *Specifications for LP-Gas Cylinders,* or the Standard for *Cylinders, Spheres, and Tubes for Transportation of Dangerous Goods and Commission,* CAN/CSA-B339, as applicable.

d. The cylinder used must include a collar to protect the cylinder valve, and the cylinder supply system must be arranged for vapor withdrawal.

e. The pressure regulator and hose assembly used must match the specification for Type I by *ANSI Z 21.58/CGA 1.6* (see Fig. 7-1).

f. The propane-gas cylinder valve must be equipped with a cylinder connection device, described as Type I in the standard defined in paragraph **e**. above. This device is commonly described as an Acme thread coupler.

g. If the propane-gas cylinder comes with a dust plug, place the dust cap on the cylinder valve outlet whenever the cylinder is not in use.

COUPLER OPERATION

To connect the regulator/hose assembly to the propane-gas cylinder valve fitting: Press the hand nut on the regulator over the Acme thread fitting on the cylinder valve. Turn the hand nut clockwise to engage the threads and tighten until snug. The use of pliers or a wrench should not be necessary. Only cylinders marked “propane” may be used.

To disconnect: Turn the hand nut counterclockwise until detached (Fig. 7-1).

Important: Before using the unit, and after each time the cylinder is removed and reattached, check the hose for wear (see **a**.) and check all connections for leaks. Turn off the unit valves and open the main cylinder valve, then check connections with soapy water. Repair any leaks before lighting the unit.

CAUTION: Always turn the propane cylinder main valve off after each use, and before moving the unit and cylinder or disconnecting the coupling. This valve must remain closed and the cylinder disconnected while the appliance is not in use, even though the gas flow is stopped by a safety feature when the coupler is disconnected.

Carefully inspect the hose assembly each time before the gas is turned on. A cracked or frayed hose must be replaced immediately.

If the appliance is stored indoors, the cylinder must be disconnected and removed. Disconnected cylinders must be stored outdoors, out of the reach of children, with threaded valve plugs tightly installed, and must not be stored in a building, garage, or any other enclosed area.

FOR YOUR SAFETY

a. DO NOT store a spare propane-gas cylinder under or near this appliance.

b. NEVER fill the cylinder beyond 80-percent full.

c. IF THE INFORMATION IN **a.** AND **b.** IS NOT FOLLOWED EXACTLY, A FIRE CAUSING DEATH OR SERIOUS INJURY MAY OCCUR.

Fig. 7-1 Type I Acme thread coupler

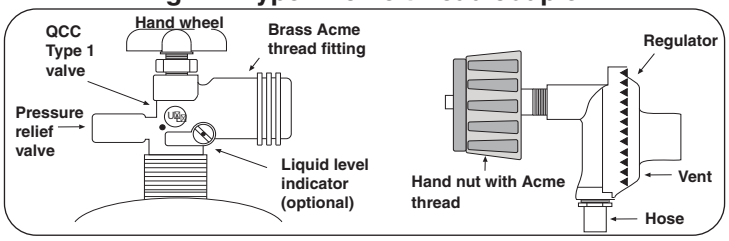

Installation must be performed by a qualified professional service technician.

This unit is designed for outdoor use only. **DO NOT** use this unit inside a building, garage, or enclosed area. **DO NOT** use this unit in or on a recreational vehicle or boat.

OVERHEAD CONSTRUCTION AND EXHAUST HOOD REQUIREMENTS

A minimum 5 foot clearance is required between the cooking surface and the overhead construction.

When installed under combustible overhead construction, the area above the cooking surface of the unit **must** be covered with an exhaust hood. The exhaust hood provides the protection for the combustible overhead construction. See exhaust hood information below and Fig. 8-1.

Important: **DO NOT** use this appliance under **unprotected** combustible overhead construction.

When installed under overhead non-combustible construction, an exhaust hood is highly recommended; see exhaust hood information below and Fig. 8-1.

Exhaust Hood

When using an exhaust hood, the area above the cooking surface of the grill must be covered with a hood larger than the cooking area of the grill, and with a minimum of 1200 CFM (cubic feet per minute) rated exhaust fan for proper outdoor application.

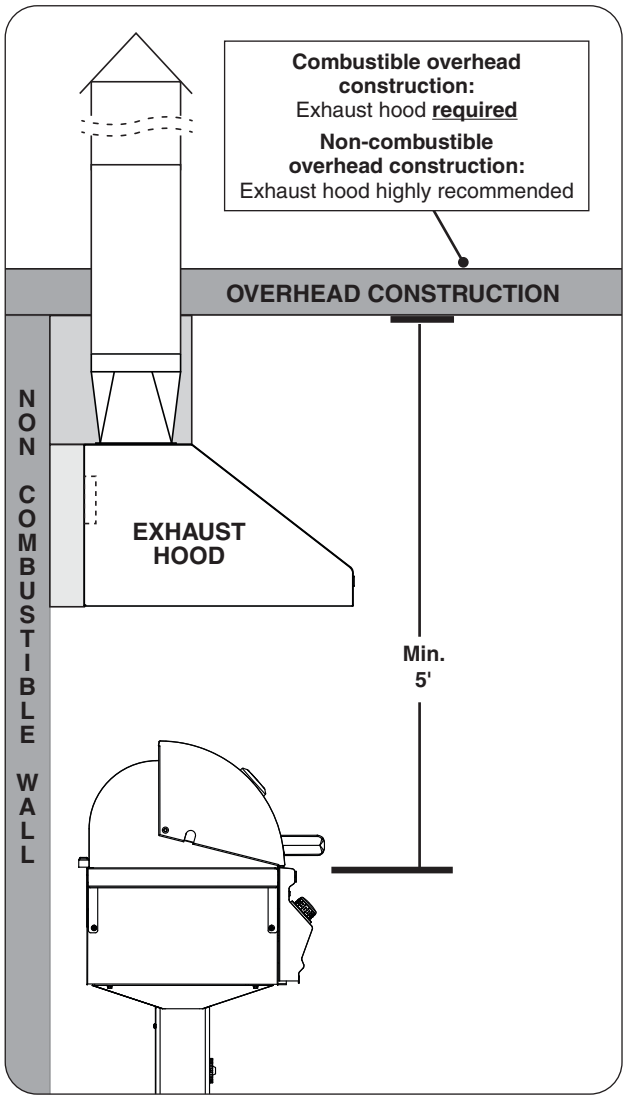

Fig. 8-1 Overhead requirements

REAR WALL CLEARANCES

For the minimum clearances between the unit and rear walls, your setup must fall within one (or more) of the following:

A. Clearance between unit and strictly non-combustible rear wall

(*i.e. brick wall, see Fig. 9-1*)

- The unit must have a minimum clearance of 4" from the non-combustible rear wall.

  (To allow for proper ventilation and prevent dangerous overheating.)

B. Clearance between unit and a protected combustible rear wall

(i.e. a non-combustible wall in front of a combustible wall to serve as a barrier. This can be accomplished by brick, or a metal stud finished with non-combustible substrate, see Fig. 9-2)

- The unit must have a minimum clearance of 14" from the protected combustible rear wall.

  (The 4" non-combustible material plus an additional 10" clearance between the unit and protected rear wall.)

C. Clearance between unit and combustible rear wall

- The unit must have a minimum clearance of 18" from the combustible rear wall (see Fig. 9-3).

SIDE WALL / CORNER WALL CLEARANCES (if applicable)

The unit must have a minimum clearance of 24" from any side walls (to account for variables in airflow that could affect performance). See Fig. 9-4.

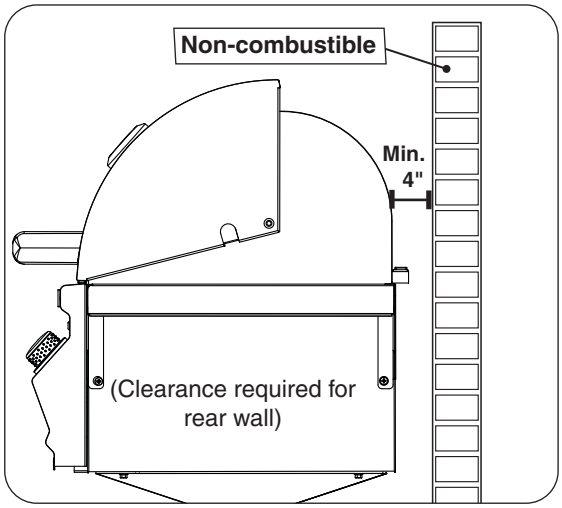

Fig. 9-1 Clearance '**A**' Diagram

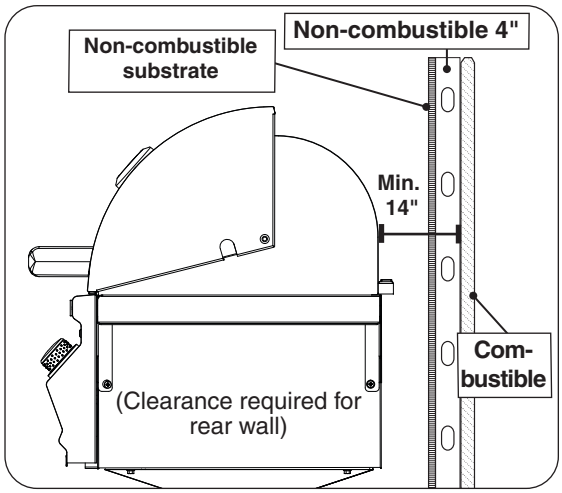

Fig. 9-2 Clearance '**B**' Diagram

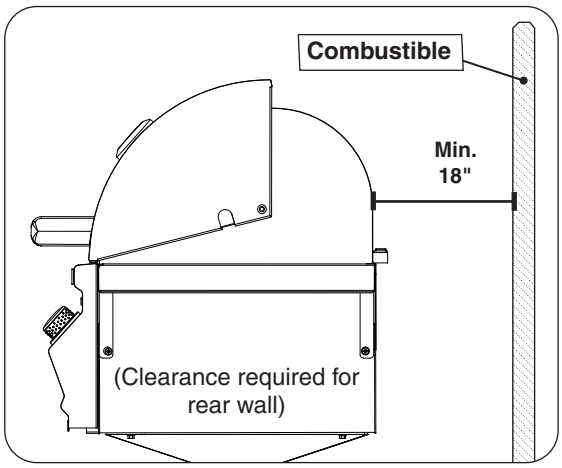

Fig. 9-3 Clearance '**B**' Diagram

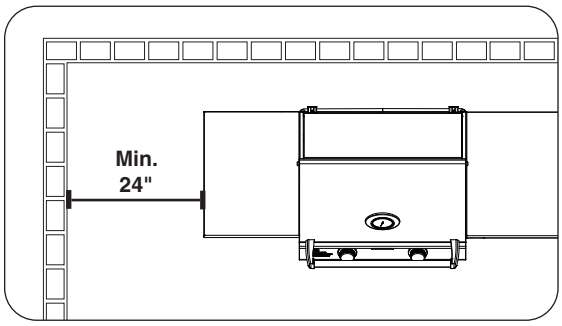

Fig. 9-4 Side/corner wall clearance

The control panel MUST remain removable for servicing (see CONTROL PANEL REMOVAL section).

COMBUSTION AIR AND COOLING AIRFLOW

Proper airflow (front-to-back, Fig. 10-1) MUST be maintained for the unit to perform as it was designed. If airflow is blocked, overheating and poor combustion will result. Do not block the 1" front air inlet along the bottom of the control panel.

CAUTION: Wind blowing into or across the rear oven lid vent (Fig. 10-3) can cause poor performance and/or dangerous overheating. Install the grill so that the prevailing wind blows toward the front of the grill (Fig. 10-2). **A wind deflector is available for purchase to assist in proper airflow during windy conditions.** See Table 1 for model numbers. Follow the instructions included with the wind deflector for installation.

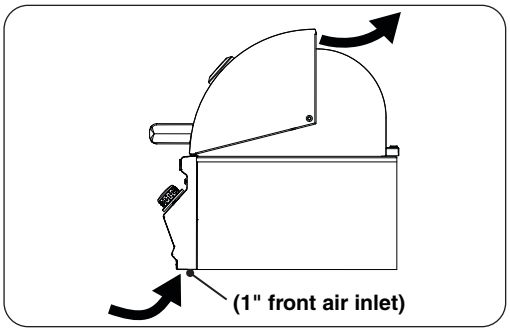

Fig. 10-1 Airflow diagram

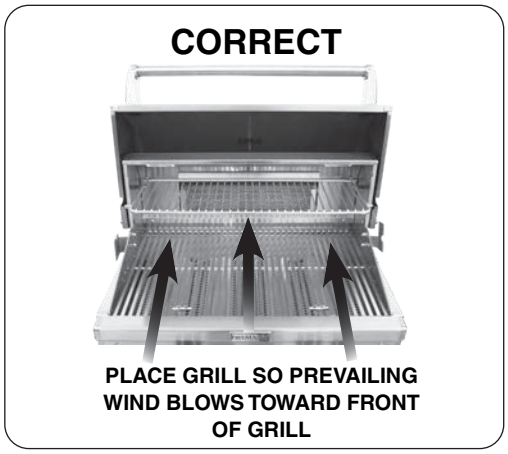

Fig. 10-2 Airflow direction - CORRECT

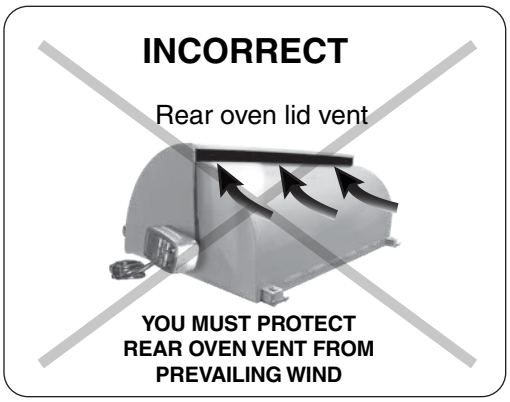

Fig. 10-3 Airflow direction - INCORRECT

GAS-SUPPLY PLUMBING REQUIREMENTS

The gas supply is to be routed and connected to the flex connector from behind the post, from beneath the post, or within the post from underground. Your individual installation may vary. **Observe the National Fuel Gas Code and all local codes. Leak test at all connections.**

The gas supply must be sized to provide minimum inlet pressure at the maximum flow rate (BTU/hr). Undue pressure loss will occur if the pipe is too small, or the run is too long. Gas supply pipe must be ½" minimum interior diameter. If the gas line is longer than 20', a larger diameter line may be necessary. Refer to the NFPA 54 guidelines for further details.

A C.S.A. approved stainless steel flex connector is included and pre-installed to the timer valve (inside of post), and routes to the gas supply. A flare-to-NPT adapter is provided for 1/2" pipe.

Use a pipe joint compound resistant to all gasses on all NPT pipe fittings. Make sure to tighten every fitting securely. **Do not use pipe joint compound to connect flare fittings.**

Important: **A shut-off valve (not included) in the gas supply line is required.** It provides for safety when the unit is not in use and for convenient maintenance and repair. It must be installed within 6 feet of the unit and must be easily accessible. Use a pipe joint compound resistant to all gasses on all NPT pipe fittings **except flare fittings**.

GAS SUPPLY AND MANIFOLD PRESSURES:
For **natural gas** - normal 7" water column (w.c.), minimum 5", maximum 10 1/2". For **propane gas** - normal 11" w.c., minimum 10", maximum 13".

Note: An additional regulator may be needed to meet these requirements.

ELECTRICAL SAFETY

- To protect against electric shock, do not immerse cord or plugs in water or other liquid.
- Unplug from the outlet when not in use and before cleaning. Allow to cool before putting on or taking off parts.
- Do not operate any outdoor cooking gas appliance with a damaged cord, plug, or after the appliance malfunctions or has been damaged in any manner. Contact the manufacturer for repair.
- Do not let the cord hang over the edge of a table or touch hot surfaces.
- Do not use an outdoor cooking gas appliance for purposes other than intended.
- When connecting, first connect plug to the outdoor cooking gas appliance then plug appliance into the outlet.
- **Use only a properly wired and inspected 120VAC (15 AMP minimum) Ground Fault Circuit Interrupter (GFCI) GROUNDED 3-wire receptacle with this outdoor cooking gas appliance.**
- The GFCI receptacle must be a WEATHER-PROOF IN-USE COVERED RECEPTACLE.
- Never remove the grounding plug or use with an adapter of 2 prongs.
- Use only extension cords with a 3 prong grounding plug, rated for the power of the equipment, and approved for outdoor use with a W-A marking.
- **The provisions of the National Electric Code as well as any local codes must be observed when installing the product.**

MODEL SPECIFICATIONS

		A430s
Main burner	Quantity	2
	N/P orifice drill size	#42 / #54
	N/P air shutter opening †	3/16" / 3/16"
Backburner *	N/P orifice drill size	#52 / #59
	N/P air shutter opening †	5/8" / 5/16"
Infrared searing burner *	N/P orifice drill size	#49 / #56
Burner maintenance kit model # (not included)		MK-1
Grill complete maintenance kit model # (not included)		MCK-1
Wind deflector model # (not included)		23728-19
Input electrical requirements		100~240 VAC / 1.90A max. / 50/60 Hz / GFCI outlet
Appliance rating		13 VDC / 150 Watts
Oven lights rating		**12V / 10 watt** halogen bulb

* If equipped
† These are air shutter factory settings. These settings may require adjustment due to gas conversion, altitude, or other local conditions. See AIR SHUTTER ADJUSTMENT / BURNER FLAME INSPECTION section.

Table 1 - Product Specifications

POST GRILL WIRING DIAGRAM *

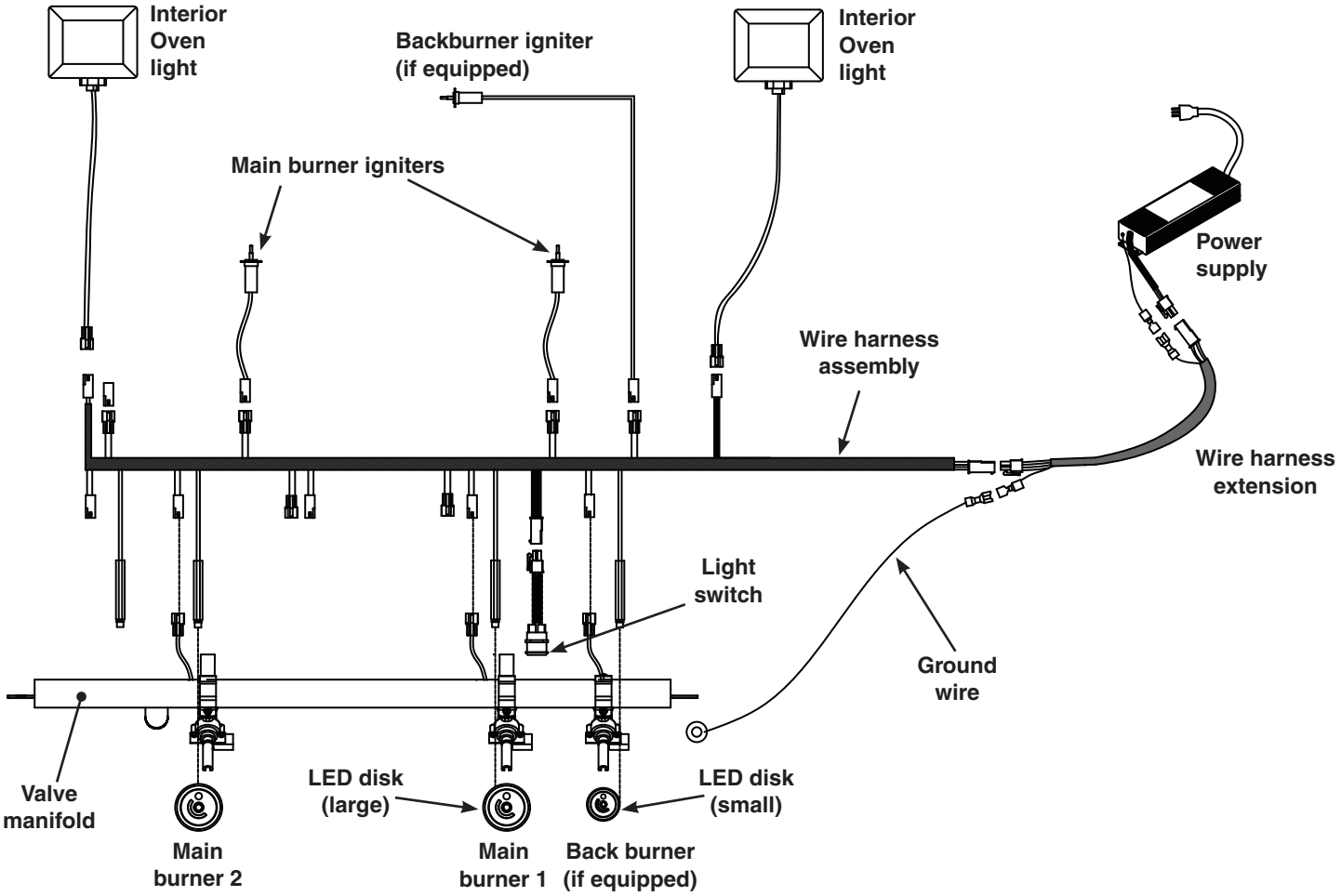

*** Model wire diagrams may vary.**

Note: In addition, a wire diagram specific to your unit can be found affixed to the inside of the control panel.

Height			Width		Depth	
Floor to top (with oven)		Floor to top of shelf **(C)**	Left to right		Front to back	
Open **(A)**	Closed **(B)**		Post base **(D)**	Shelves **(E)**	Post base **(F)**	Maximum outer **(G)**
57 1/8"	49 7/8"	37"	26"	56"	20 1/4"	26"

Table 2 - Post Patio Mount Grill Dimensions

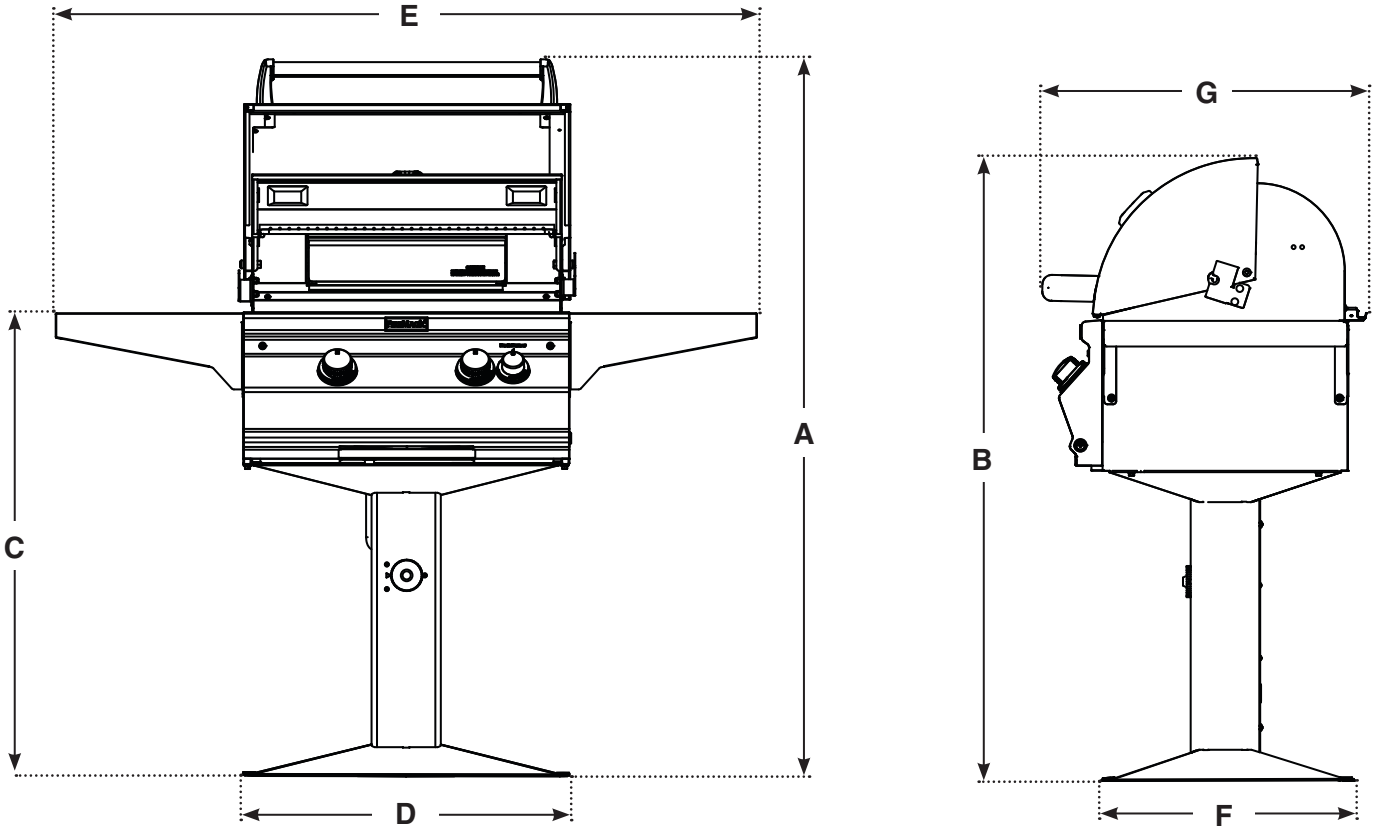

Fig. 13-1

Height*				Width		Depth	
Floor to top (with oven)		Floor to top of shelf **(J)**	Floor to bottom of extension below ground **(K)**	Left to right		Front to back	
Open **(H)**	Closed **(I)**			Post **(L)**	Shelves **(M)**	Post **(N)**	Maximum outer **(O)**
57 1/8"	49 7/8"	37”	18”	5 1/2”	56"	5 1/2”	26"
***Note:** Height dimensions are approximate from ground level once installed.							

Table 3 - In-Ground Post Grill Dimensions

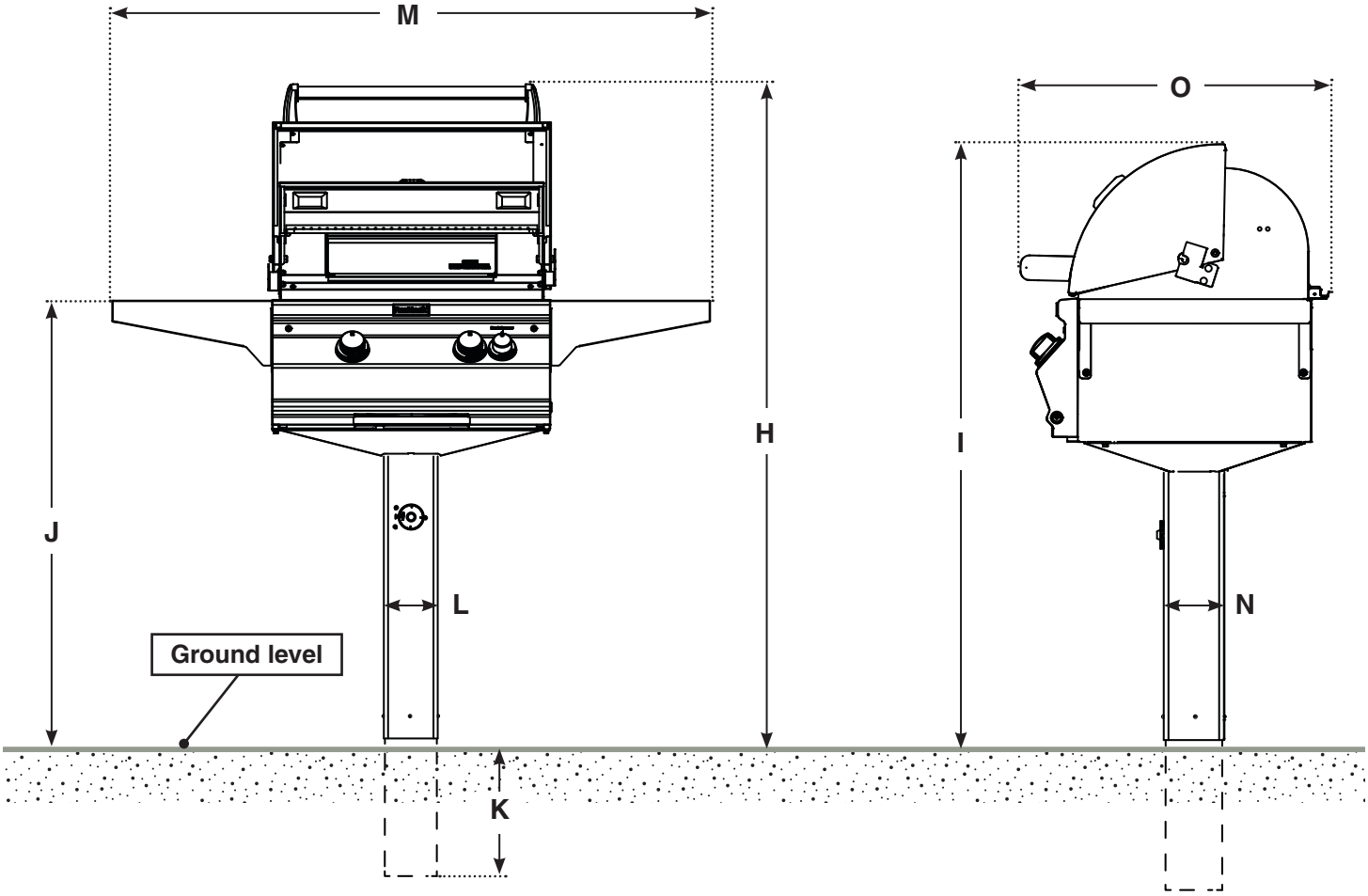

Fig. 14-1

AURORA GRILL REPLACEMENT PARTS LIST

IMPORTANT

Remove all packing material and discard prior to lighting.

To order replacement parts, contact your local Fire Magic® dealer.

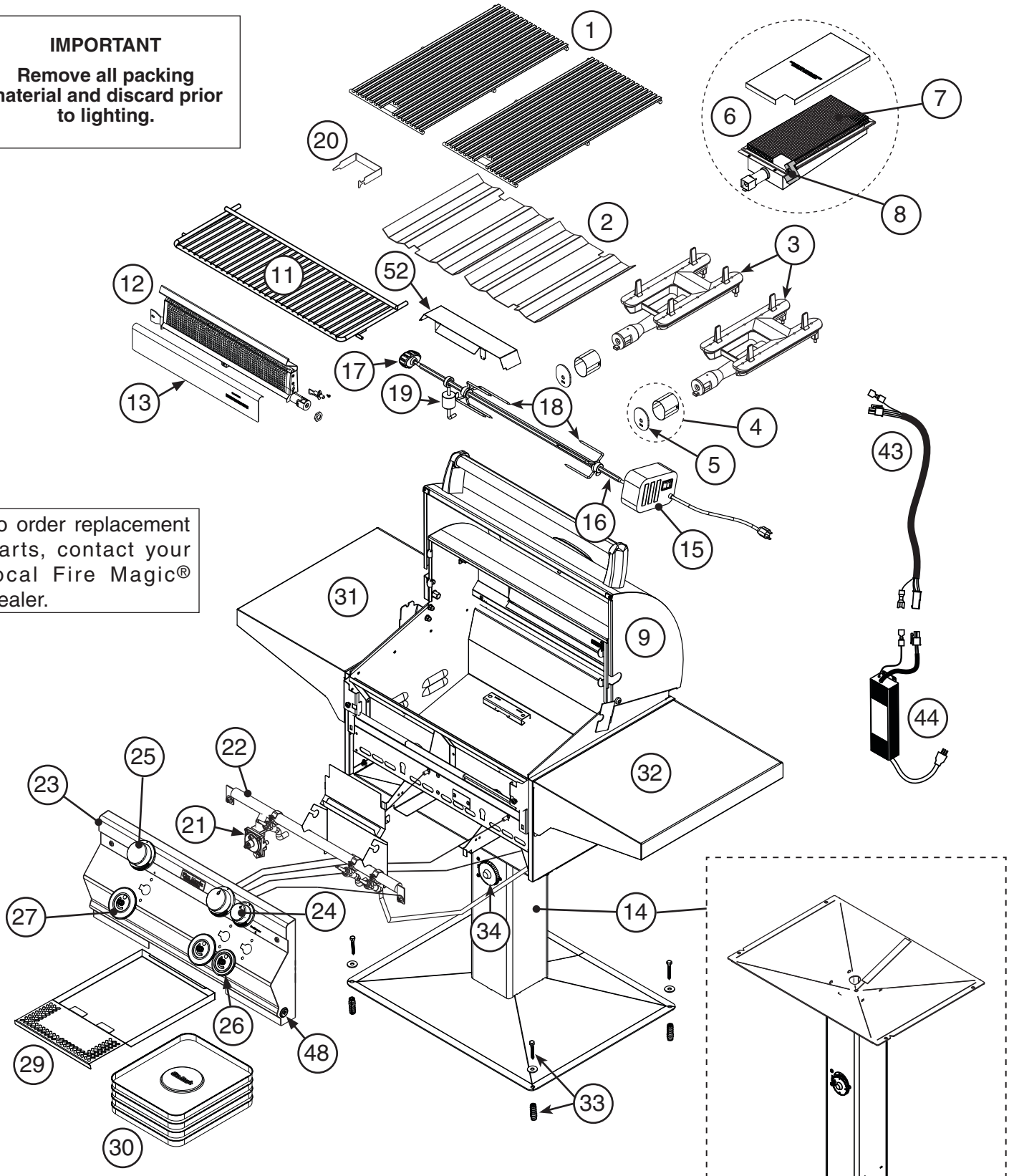

Some items shown are optional, or are not available for certain models. Your model may vary, refer to parts table.

AURORA GRILL REPLACEMENT PARTS LIST (cont.)

Item	Description	A430s Part No.	Qty.
1.	Stainless cooking grid (set of 2)	3542-DS-2	1
2.	Flavor grid (set of 2)	3063-S-2	1
3.	Main burner	3042-50	2
4.	Flame arrester kit	24177-05	2
5.	Silicone gasket	24177-06	2
6.	Infrared burner assembly *	3065A	1
7.	Infrared radiant protective screen *	3060-02A	1
8.	Infrared electrode assembly *	3199-80	1
9.	Oven lid w/ oven thermometer	23729-60	1
10.	Oven lid spring kit ‡	23729-72	1
11.	Warming rack	3672S-B	1
12.	Backburner*	24130-11H	1
13.	Backburner cover*	24148-010	1
14.	Patio base w/ hardware *†	24330-31	1
or	In-ground base w/ hardware *†	24330-32	1
15.	Heavy-duty rotisserie motor*	3600-02	1
16.	Heavy-duty rotisserie rod*	3603-30	1
17.	Rotisserie knob*	24187-16	1
18.	Meat holder (pair)*	3613	1
19.	Counterbalance*	3620E	1
20.	Grid lifter	3519	1
21.	Convertible regulator	PR-4	1
22.	Valve manifold w/ backburner	24130-22	1
or	Valve manifold w/o backburner	24130-28	1
23.	Control panel w/ backburner	24130-49	1
or	Control panel w/o backburner	24130-50	1
24.	Small knob *	24182-42	1
25.	Large knob	24182-41	2
26.	LED disk (small)*	24182-64	1
27.	LED disk (large)	24182-63	2

Item	Description	A430s Part No.	Qty.
28.	Oven lid thermometer w/ bezel ‡	23307	1
29.	Drip tray	3084	1
or	Drip tray w/ match holder	3085	1
30.	Drip tray liner (set of 4)	3557	1
31.	Rigid shelf (left)	24330-017L	1
32.	Rigid shelf (right)	24330-017R	1
33.	Patio mount hardware kit w/ lag shield and lag screw (if applicable)	24330-25	1
34.	Timer valve (1 hour)	3092B	1
35.	Propane regulator / hose assy. *‡	5110-07	1
or	Natural Gas QD hose *‡	5110-03	1
36.	Wire harness assembly‡	24177-29	1
37.	Backburner electrode*‡	4199-52	1
38.	Main burner electrode‡	3199-72	2
39.	Natural gas orifice(s)‡	3001-42-2	1
40.	Natural backburner gas orifice(s)‡	3001-52-1	1
41.	Propane gas orifice(s)‡	3001-54-2	1
42.	Propane backburner gas orifice(s)‡	3001-59-1	1
43.	Wire harness extension	24182-53	1
44.	Power supply box w/ cord	24182-18	1
45.	**12V / 10** watt halogen light bulb ‡	24187-15	2
46.	Light lens ‡	24187-26	2
47.	Lamp assembly ‡	24187-28	2
48.	Light switch	24182-48	1
49.	Backburner flex connector *‡	3030-01	1
50.	Lighting tube (left) ‡	24187-29	1
51.	Lighting tube (right) ‡	24187-35	1
52.	Air baffle	24194-40	1

* If equipped
† For replacement only (not conversion)
‡ Not shown

It is not required to remove the control panel or knobs to install this unit.

DO NOT lift the unit from the control panel when installing.

PREPARE FOR INSTALLATION

Consult a qualified professional installer.

The flex connector can be routed out the back of the post, under the post base, or inside the post. The power supply cord is to be routed out the back.

To gain access to the inside of the post, unscrew and carefully open the access plate on the rear of the post using a medium Phillips-head screwdriver. Retain the screws.

A power supply is pre-mounted to the access plate. For ease of installation, disconnect the power supply from the wire harness extension. Locate the wires coming from the inside of the post to the power supply and carefully disconnect (see Fig. 17-1 and 17-2).

Important: Pull from the connectors (not the wires).

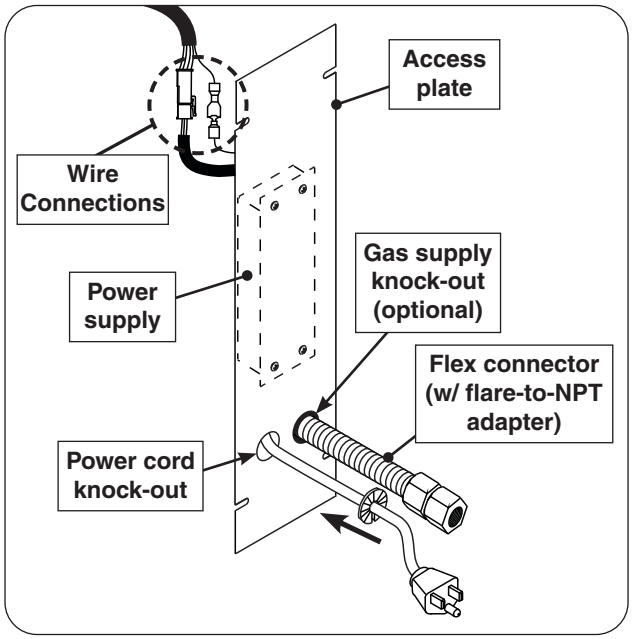

Fig. 17-1 Access plate view & install orientation

ROUTE POWER SUPPLY CORD

The power cord will need to be routed through the access plate for later connection to a **120VAC (15 AMP minimum) GFCI GROUNDED 3-wire receptacle**. The GFCI receptacle must be a WEATHER-PROOF IN-USE COVERED RECEPTACLE.

1. Remove the knock-out disc at the bottom left of the access plate with a large flathead screwdriver. (Insert the screwdriver into the notch provided in the center of the knock-out.)
2. Remove the plastic power cord bushing attached to the power cord.
3. Feed the power cord through the newly created hole.
4. Install the bushing onto the power cord and slide the bushing up against the access plate knock-out hole and snap into place. See Fig. 17-1.

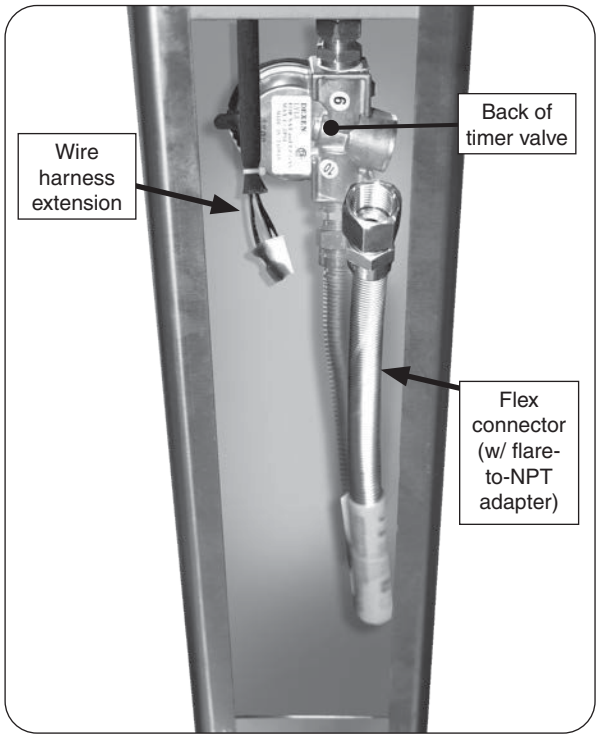

Fig. 17-2 Post interior detail

ROUTE FLEX CONNECTOR

The gas supply line will need to be run to the post install location as appropriate for the desired setup.

To route flex connector through rear of post:

1. Remove the knock-out disk at the bottom right of the access plate with a large flathead screwdriver. (Insert the screwdriver into the notch provided in the center of the knock-out.)
2. Remove the plastic grommet (attached to the flex connector) and insert it into the newly created opening. Then route the flex connector through the opening. See Fig. 17-1 and 17-2.

To route flex connector beneath post base:

Route the flex connector through the hole found beneath the center of the post base (see Fig. 17-3).

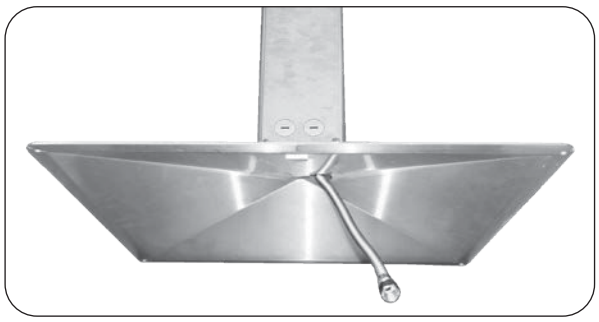

Fig. 17-3 Post base option

CONNECT THE GAS SUPPLY

To Connect To Propane Cylinder:

Read the safety warnings and follow the instructions in the section SAFE USE AND MAINTENANCE OF PROPANE GAS CYLINDERS.

- Only a C.S.A. listed stainless steel flex connector can be connected to the unit.
- The regulator/hose assembly coming from the cylinder can only be connected to the above mentioned flex connector. A 1/2" male-to-male flare adapter will be required (not included). **DO NOT connect the regulator/ hose assembly directly to the unit.**

To Connect To Natural Or Household Propane Gas Supply:

- Before connecting the gas supply to your appliance, pressures MUST be tested and MUST NOT exceed 10.5" w.c. for Nat. gas and 13" w.c. for L.P. gas. An additional regulator may be required.
- Refer to the GAS SUPPLY PLUMBING REQUIREMENTS section for all details on the gas supply and its setup.

1. **Turn OFF the gas supply at the source.**
2. Route the flex connector to the gas supply stub.
3. A shut-off valve is required within 6 feet of the unit and must be easily accessible.

   If shut-off valve is installed in-line:

   - Install the supplied flare-to-NPT adapter to the gas supply (NPT) using a pipe joint compound resistant to all gasses (see Fig. 18-2, A). Tighten securely.
   - Connect the flex connector to the adapter (see Fig. 18-2, A). Tighten securely.

   If shut-off valve is connected to end of gas supply stub:

   - Connect the flex connector to the shut-off valve (flare) (see Fig. 18-2, B). Tighten securely.

LEAK TEST

Turn all burner valves to the **OFF** position. Turn on the gas supply, and test at all connections for leaks using a soapy water solution. If bubbles appear, a leak is present. Turn off the gas and tighten at all connections. Repeat until no leaks are present. If a leak persists, turn off the gas supply and contact the local gas company or dealer. **NEVER USE A FLAME TO CHECK FOR LEAKS.**

Once the leak test is complete, turn off the gas supply and proceed.

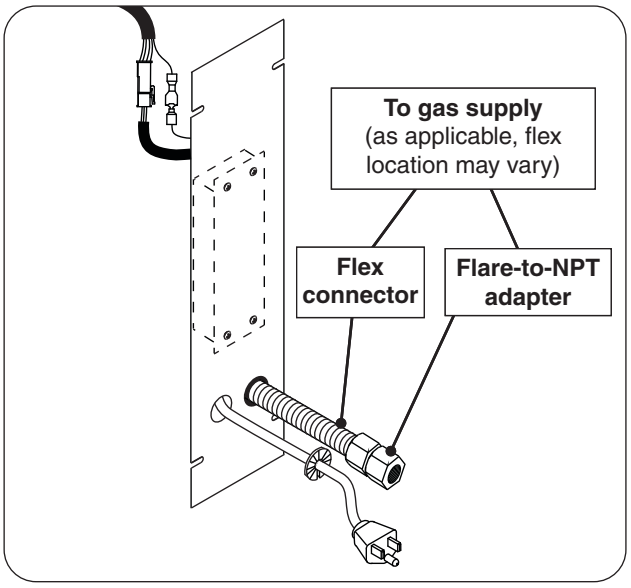

Fig. 18-1 Flex connector detail

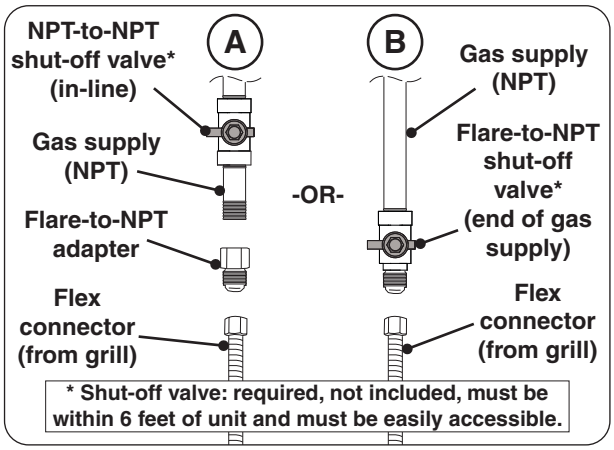

Fig. 18-2 Connecting to a gas line

RECONNECT POWER SUPPLY WIRES

CAUTION: IMPROPERLY CONNECTED WIRES WILL CAUSE DAMAGE TO THE GRILL AND MAY RESULT IN PROPERTY DAMAGE AND/OR PERSONAL INJURY.

To connect the power supply box, connect the wires coming from the power supply to the wire harness extension as shown in Fig. 19-1.

Important: Apply dielectric grease to the male connectors prior to making any wire connections.

RE-SECURE ACCESS PLATE

Carefully replace the access plate using the four screws, ensuring all interior components are properly oriented inside of the grill. Ensure the power supply cord (and flex connector if applicable) coming out of the rear of the post are properly situated and the plastic bushing/grommet pieces are secure in place.

CONNECT POWER CORD

Connect the cord coming from the rear access plate to a **120VAC (15 AMP minimum) GFCI GROUNDED 3-wire receptacle.** The GFCI receptacle must be a WEATHER-PROOF IN-USE COVERED RECEPTACLE.

WARNING

Electrical Grounding Instructions:
This appliance is equipped with a three-pronged (grounding) plug for your protection against shock hazard and should be plugged directly into a properly grounded three-prong receptacle. Do not cut or remove the grounding prong from this plug.

SECURING THE PATIO MOUNT GRILL

Important: **BEFORE USE**, the patio mount base must be securely fastened to a stable, level surface to ensure the grill remains fixed and upright at all times.

Locate the patio mount base in the planned grill location and mark the 4 holes. Drill the marked holes to a 1/2" diameter x 1 1/2" depth. Insert the lag shields (see PARTS LIST) into the holes, being sure that they are flush with the ground.

Align the holes on the patio mount base over the lag shields in the ground. Secure the base with the lag screws (see PARTS LIST) using a 7/16" nut driver.

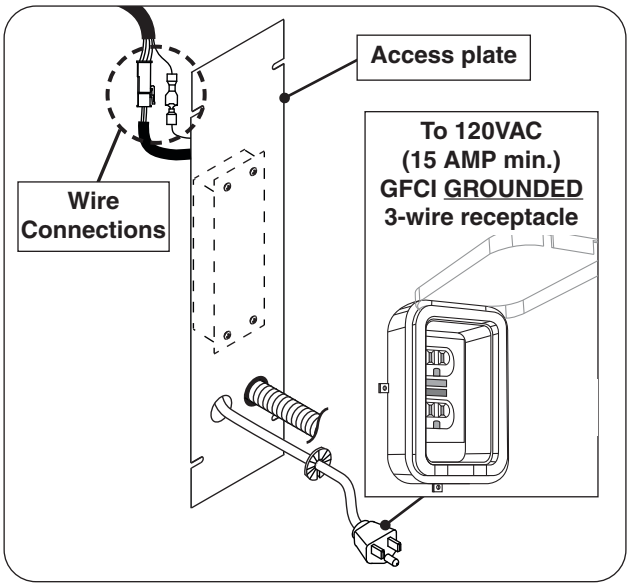

Fig. 19-1 Connect: Wires, Plate, Power

IN-GROUND POST INSTALLATION

It is not required to remove the control panel or knobs to install this unit. DO NOT lift the unit from the control panel when installing.

PREPARE FOR INSTALLATION

Consult a qualified professional installer / licensed contractor.

The in-ground post is designed primarily for installation with a permanent underground gas supply. The power supply cord is to be routed out the back.

To gain access to the inside of the post, unscrew and carefully open the access plate on the rear of the post using a medium Phillips-head screwdriver. Retain the screws.

A power supply is pre-mounted to the access plate. For ease of installation, disconnect the power supply from the wire harness extension. Locate the wires coming from the inside of the post to the power supply and carefully disconnect (see Fig. 20-1 and 20-2).

Important: Pull from the connectors (not the wires).

ROUTE POWER SUPPLY CORD

The power cord will need to be routed through the access plate for later connection to a **120VAC (15 AMP minimum) GFCI GROUNDED 3-wire receptacle.** The GFCI receptacle must be a WEATHER-PROOF IN-USE COVERED RECEPTACLE.

1. Remove the knock-out disc at the bottom left of the access plate with a large flathead screwdriver. (Insert the screwdriver into the notch provided in the center of the knock-out.)
2. Remove the plastic power cord bushing attached to the power cord.
3. Feed the power cord through the newly created hole.
4. Install the bushing onto the power cord and slide the bushing up against the access plate knock-out hole and snap into place. See Fig. 20-1.

ROUTE GAS SUPPLY (UNDERGROUND METHOD)

Note: This section addresses an underground gas supply setup. To connect through the rear of the post, reference the ROUTE FLEX CONNECTOR section of PATIO-MOUNT INSTALLATION, and do not perform the steps until after: attaching the extension post, and installing the post / pouring the concrete.

1. After running the underground gas supply (NPT) line to the planned grill location, dig a hole for the post and extension approximately 18" deep and 10-12" in diameter.

Note: Run the gas supply line up from the bottom of the hole (a little off center) so that it reaches to approximately 4" above ground level.

Note: The actual depth of the hole should be such that the shelf surface is approximately 36.5" above ground level.

2. Verify that the gas supply line fits through the gas line clearance hole in the bottom of the post (see Fig. 20-3). The clearance hole is the larger of the two holes in the bottom of the post and is off center.
3. Verify that the flex connector coming from the inside of the post will connect properly with the gas supply line.

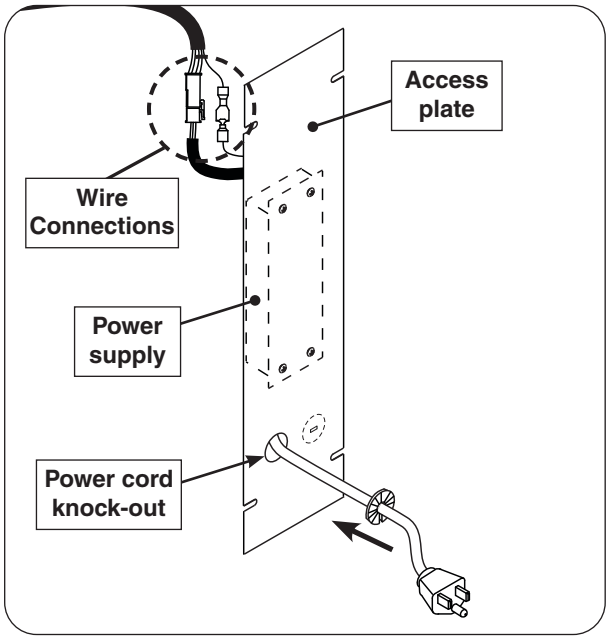

Fig. 20-1 Access plate view & orientation

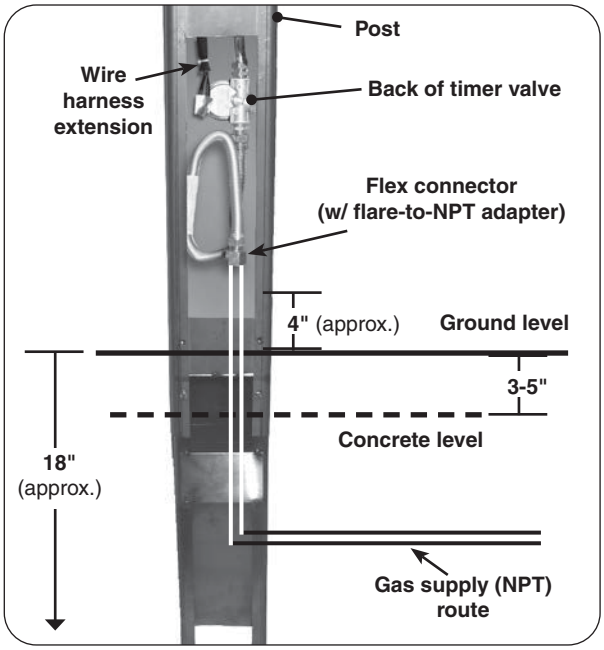

Fig. 20-2 In-ground install orientation

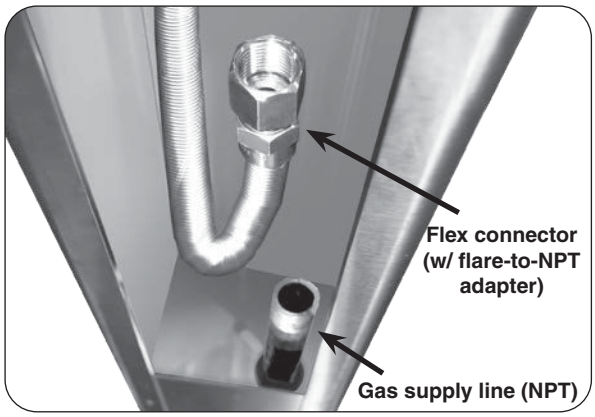

Fig. 20-3 Post interior detail

ATTACH POST EXTENSION

1. Attach the extension to the bottom of the grill post so that the open portion is toward the back of the grill and the five holes in the extension line up with the five (5) weld-nuts in the post (see Fig. 21-1).
2. From outside the joined post and extension, insert one of the 1/4 X 20"-5/8 bolts (supplied) into each of the five (5) bolt holes and tighten each using a 7/16" socket driver or wrench (see Fig. 21-2).

Note: There is one hole on each side of the post, except the back which has two holes located on either side of the extension opening.

PLACE POST IN-GROUND & POUR CONCRETE

1. Prepare the concrete to be used for the install.
2. Carefully orient the post over the gas supply line and into the installation hole.

Important: Verify that the gas supply line is running up through the post hole, just off center. It must extend high enough to reach the grill gas connection and remain safely above the level of the concrete when poured.

3. Remove the post, then cover the end of the gas supply line with a plastic bag and/or masking tape to avoid getting concrete or other debris in the supply line.
4. Pour the concrete into the hole 3-5" below ground level taking care to protect the gas supply line.
5. While the concrete is still wet, carefully lower the extended grill post into the hole so that the gas supply line slides through the clearance hole in the bottom of the post.
6. Orient the grill per plan, then level the grill and support it so that it remains in position while the concrete drys.

ROUTE FLEX CONNECTOR (ABOVE GROUND METHOD ONLY)

Note: This section addresses an above ground gas supply setup. If connecting underground, skip this section and continue with installation.

The gas supply line (NPT) will need to be run to the post install location as appropriate for the desired setup.

To route flex connector through rear of post:

1. Remove the knock-out disk at the bottom of the access plate with a large flathead screwdriver. (Insert the screwdriver into the notch provided in the center of the knock-out.)
2. Remove the plastic grommet (attached to the flex connector) and insert it into the newly created opening. Then route the flex connector through the opening. See Fig. 21-4.

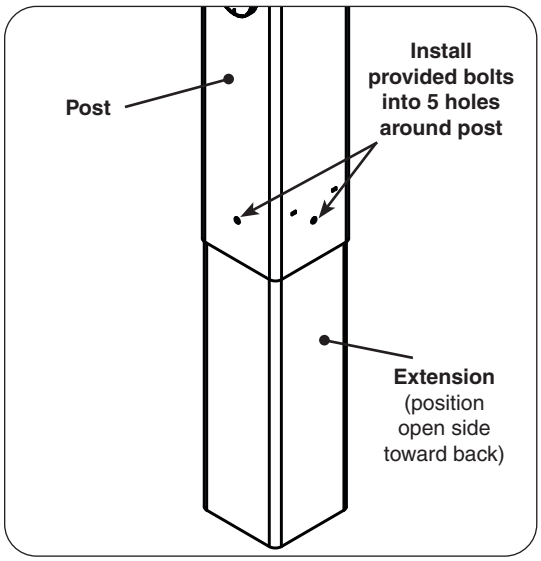

Fig. 21-1 Install extension to post

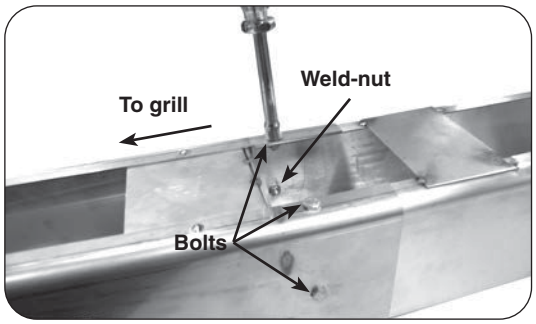

Fig. 21-2 Fasten extension to post

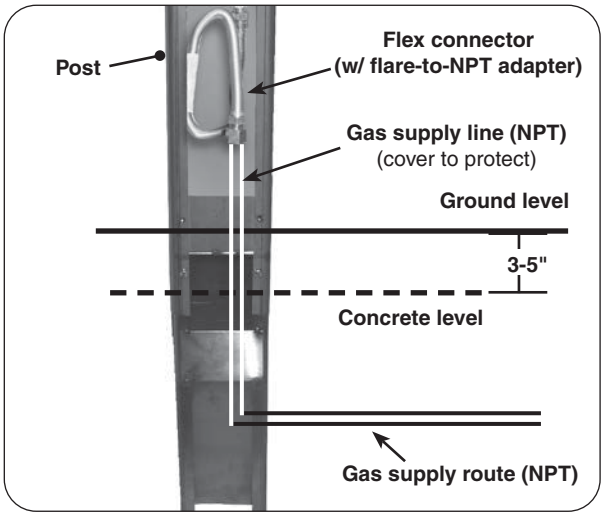

Fig. 21-3 Pour concrete & install post

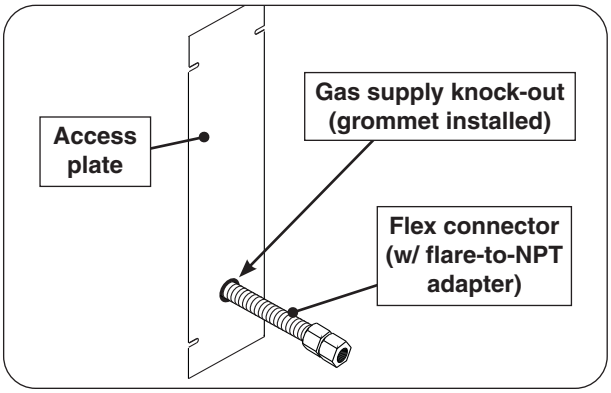

Fig. 21-4 Access plate view & install orientation

CONNECT THE GAS SUPPLY

To Connect To Propane Cylinder:

Read the safety warnings and follow the instructions in the section SAFE USE AND MAINTENANCE OF PROPANE GAS CYLINDERS.

- Only a C.S.A. listed stainless steel flex connector can be connected to the unit.
- The regulator/hose assembly coming from the cylinder can only be connected to the above mentioned flex connector. A 1/2" male-to-male flare adapter will be required (not included). **DO NOT connect the regulator/hose assembly directly to the unit.**

To Connect To Natural Or Household Propane Gas Supply:

- Before connecting the gas supply to your appliance, pressures MUST be tested and MUST NOT exceed 10.5” w.c. for Nat. gas and 13” w.c. for L.P. gas. An additional regulator may be required.
- Refer to the GAS SUPPLY PLUMBING REQUIREMENTS section for all details on the gas supply and its setup.

1. **Turn OFF the gas supply at the source.**
2. Route the flex connector to the gas supply stub.
3. A shut-off valve is required within 6 feet of the unit and must be easily accessible.

   If shut-off valve is installed in-line:

   - Install the supplied flare-to-NPT adapter to the gas supply (NPT) using a pipe joint compound resistant to all gasses (see Fig. 22-1, A). Tighten securely.
   - Connect the flex connector to the adapter (see Fig. 22-1, A). Tighten securely.

   If shut-off valve is connected to end of gas supply stub:

   - Connect the flex connector to the shut-off valve (flare) (see Fig. 22-1, B). Tighten securely.

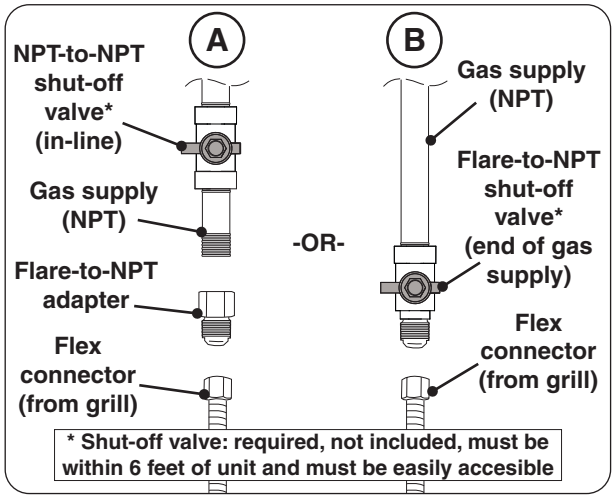

Fig. 22-1 Connecting to a gas line

LEAK TEST

Turn all burner valves to the **OFF** position. Turn on the gas supply, and test at all connections for leaks using a soapy water solution. If bubbles appear, a leak is present. Turn off the gas and tighten at all connections. Repeat until no leaks are present. If a leak persists, turn off the gas supply and contact the local gas company or dealer. **NEVER USE A FLAME TO CHECK FOR LEAKS.**

Once the leak test is complete, turn off the gas supply and proceed.

RECONNECT POWER SUPPLY WIRES

CAUTION: IMPROPERLY CONNECTED WIRES WILL CAUSE DAMAGE TO THE GRILL AND MAY RESULT IN PROPERTY DAMAGE AND/OR PERSONAL INJURY.

To connect the power supply box, connect the wires coming from the power supply to the wire harness extension as shown in Fig. 23-1.

Important: Apply dielectric grease to the male connectors prior to making any wire connections.

RE-SECURE ACCESS PLATE

Carefully replace the access plate using the four screws, ensuring all interior components are properly oriented inside of the grill. Ensure the power supply cord (and flex connector if applicable) coming out of the rear of the post are properly situated and the plastic bushing/grommet pieces are secure in place.

CONNECT POWER CORD

Connect the cord coming from the rear access plate to a **120VAC (15 AMP minimum) GFCI GROUNDED 3-wire receptacle.** The GFCI receptacle must be a WEATHER-PROOF IN-USE COVERED RECEPTACLE.

WARNING

Electrical Grounding Instructions: This appliance is equipped with a three-pronged (grounding) plug for your protection against shock hazard and should be plugged directly into a properly grounded three-prong receptacle. Do not cut or remove the grounding prong from this plug.

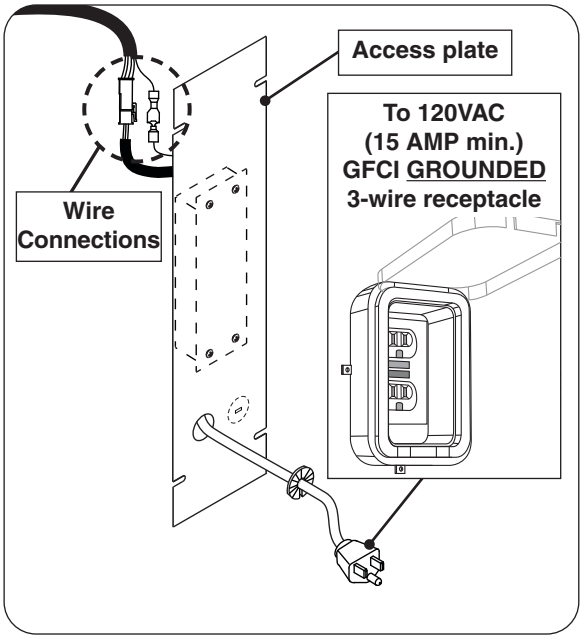

Fig. 23-1 Connect: Wires, Plate, Power

INSTALL THE FLAVOR GRIDS

Place the flavor grids directly onto the studs on the burners. Align the cutouts on the grids to the lighting tubes. See Fig. 24-1. The flavor grids allow heat from the burners to be evenly distributed throughout the cooking area.

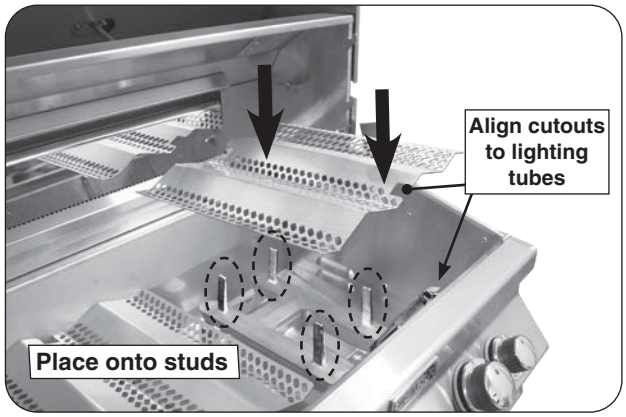

Fig. 24-1 Install flavor grids

INSTALL THE COOKING GRIDS

Note: Wear heat-resistant gloves if necessary.

Note: Do not leave the lifter on any hot surfaces.

1. With the prongs facing downward, insert the notched-end of the lifter between two grid rods, then rotate, as shown in Fig. 24-2, A & B.

Note: To balance, insert the notched-end of the lifter in the middle front half of the cooking grid.

2. Insert the rear pointed-end of the lifter between the same two rods (see Fig. 24-2, B) and carefully lift the cooking grid and place onto the front and rear grid rests of the grill (see Fig. 24-3). Repeat for all other cooking grids.

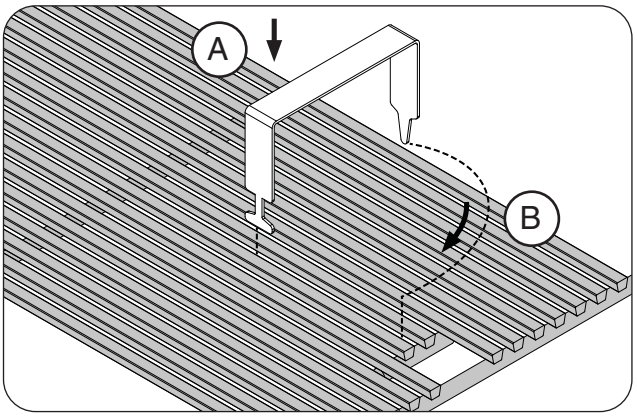

Fig. 24-2 Install cooking grids

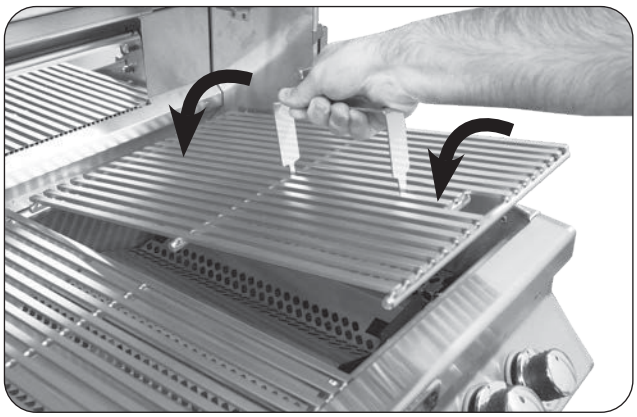

Fig. 24-3 Install cooking grids

INSTALL THE DRIP TRAY

Your grill includes a pack of four drip tray liners. Place a liner into the drip tray as shown in Fig. 24-4, and fully insert the drip tray into the bottom front of the control panel.

Note: The liner must fit under the rear lip and two front tabs found on the drip tray.

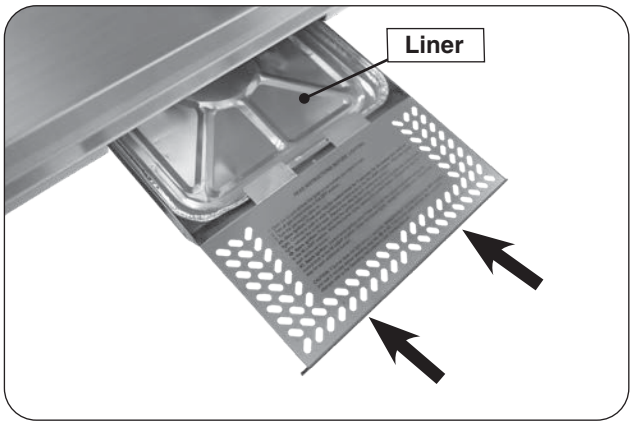

Fig. 24-4 Install drip tray

INSTALL THE WARMING RACK

Note: Wear heat-resistant gloves if necessary.

1. Locate the warming rack hooks and rear supports found on the upper portion of the grill oven (see Fig. 25-1).
2. With the warming oriented as shown, carefully rest the rear of the rack onto the rear support plates (see Fig. 25-2, A), then lower the warming rack arms onto the lower hooks for use (see Fig. 25-2, B).

   Use the top hooks for storage (see Fig. 25-1 and Fig. 25-3).

Note: Placing the warming rack in storage position or removing the warming rack before using the rotisserie will leave more clearance for the meat being cooked (if applicable)..

INSTALL THE RIGID SHELVES

This grill comes with two (2) rigid shelves that must be attached. These can be attached using the four support screws provided and a Phillips-head screw driver.

Important: Take caution to not cross-thread when tightening the screws.

1. Hold the shelf inverted so that one of the corner holes in the shelf lines up with the appropriate upper screw hole in the grill.
2. Insert the screw, but do not tighten all the way so that the shelf can be easily rotated around the first screw.
3. Line up the second corner hole in the shelf with the remaining upper screw hole in the grill. Insert a screw and tighten.

Note: You may lift the edge of the shelf upward to gain better access during much of the tightening of this screw.

4. Finally, insert the bottom screws on the left and right side of the shelf and securely tighten all screws.

To detach, reverse the process above.

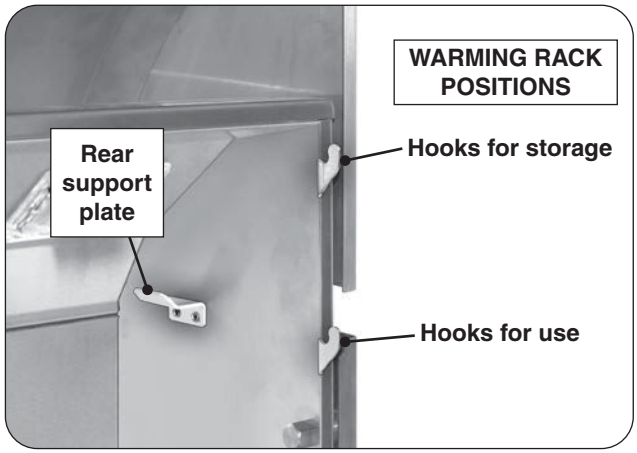

Fig. 25-1 Warming rack hooks

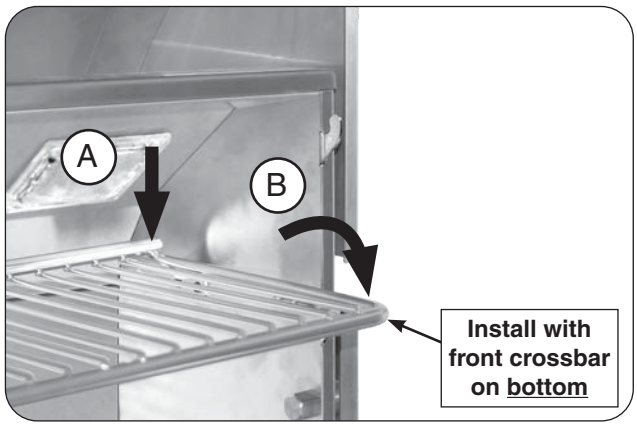

Fig. 25-2 Place warming rack for use

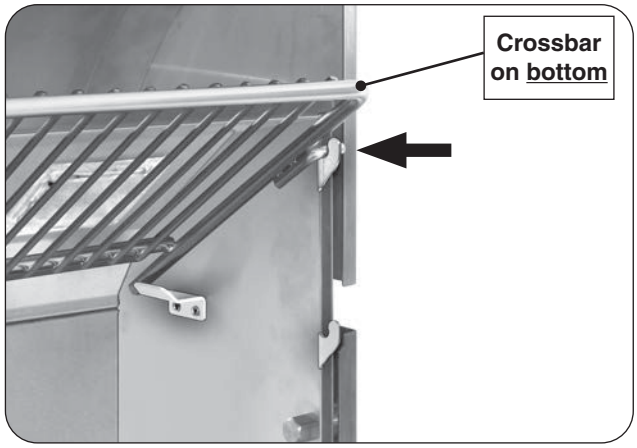

Fig. 25-3 Place warming rack in storage position

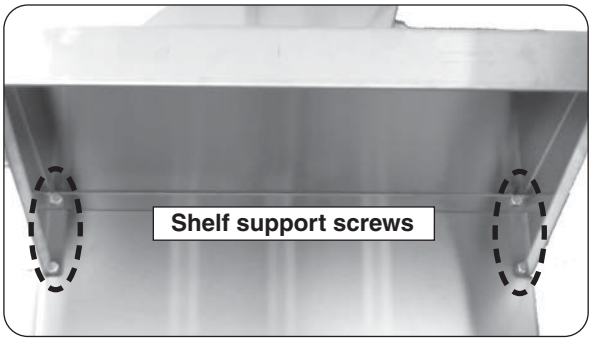

Fig. 25-4 View from under right shelf

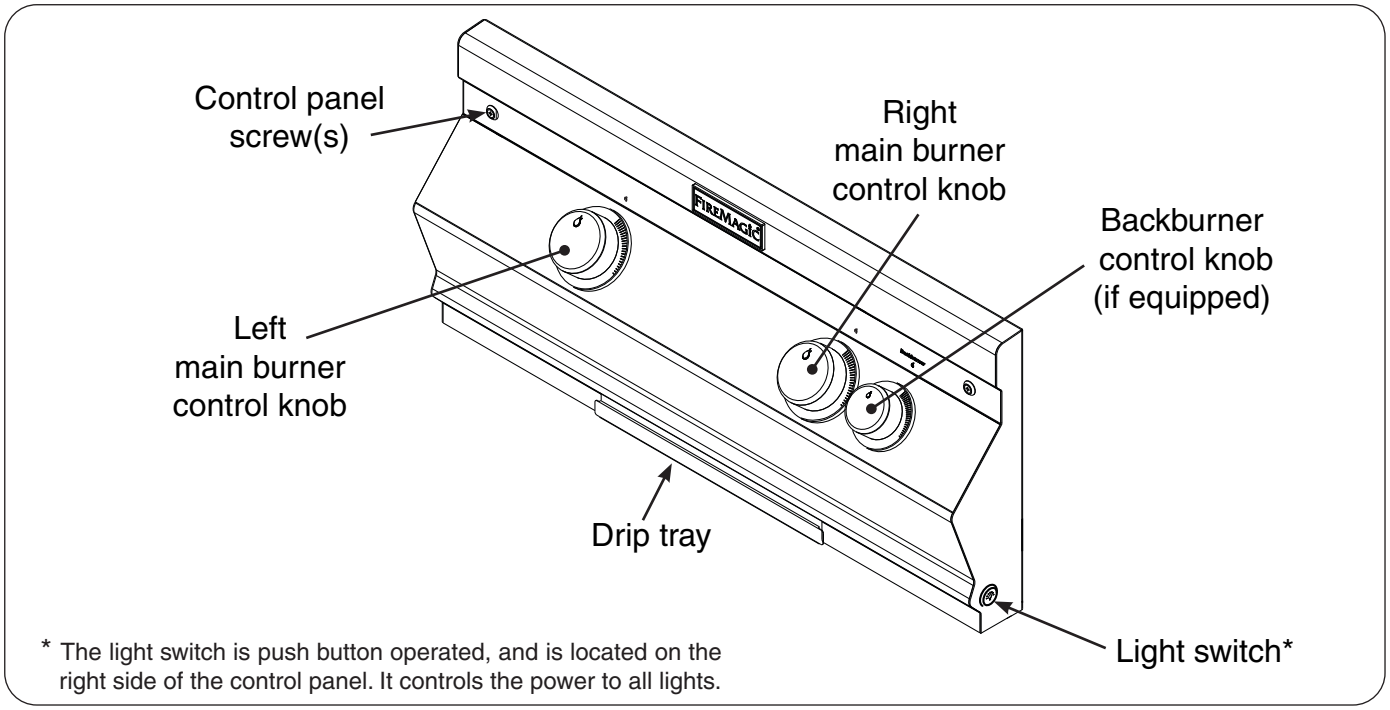

* The light switch is push button operated, and is located on the right side of the control panel. It controls the power to all lights.

Fig. 26-1 A430s controls

USING THE GRILL

BEFORE INITIAL USE

Ensure that:

- the unit has been properly installed and leak tested by a qualified professional service technician and as instructed in this manual.
- you have read and understand all of the information in this manual.

BEFORE EACH USE

Ensure that:

- you smell around the appliance area for gas. If you smell gas (and all control knobs are in the **OFF** position), immediately shut off the gas supply and contact a qualified professional service technician or the gas supplier for inspection.
- the vent openings and surrounding area of the unit are clear and free at all times.
- the cooking area and drip tray are clean, and the drip tray is properly installed.
- you inspect all piping and hoses for damage, cuts, wear, and tear. Replace any damaged components prior to use.

OPERATION

- **The unit becomes HOT during use. NEVER touch any part of the cooking area or surrounding hot surfaces with bare hands. Use long-handled insulated BBQ tools and wear an insulated glove / oven mitt.**
- **Always keep your face and body as far from the unit as possible during use. Avoid wearing loose-fitting clothing as they could ignite.**
- **This appliance is designed as an attended appliance. DO NOT leave this appliance burning when unattended.**
- **NEVER cover more than 75% of the cooking surface with griddles or pans to prevent overheating.**
- **After each use, turn the control knob(s) to the OFF position and turn off the gas supply to the unit.**

After reading and understanding all bullets above, follow these steps to light and use your grill:

1. Light the grill per the LIGHTING INSTRUCTIONS section.
2. Turn the control knobs to the HI-LIGHT position, close the hood, and allow the grill to preheat for 15 minutes or until desired cooking temperature is reached.
3. Place the food on the grill and cook as desired. Monitor the flames and the temperature, and adjust the heat setting if necessary. Ensure the timer on the unit remains on during cooking - see LIGHTING INSTRUCTIONS section.
4. See the sections below and the following pages for all other information regarding use.

WIND CONSIDERATIONS

Proper airflow (front-to-back, Fig. 27-1) MUST be maintained for the unit to perform as it was designed. See the INSTALLATION REQUIREMENTS section for details.

When using the unit in windy conditions, the wind can disrupt the airflow and cause overheating. To prevent overheating during windy conditions, do not leave the hood closed with the burners on high for more than 15 minutes.

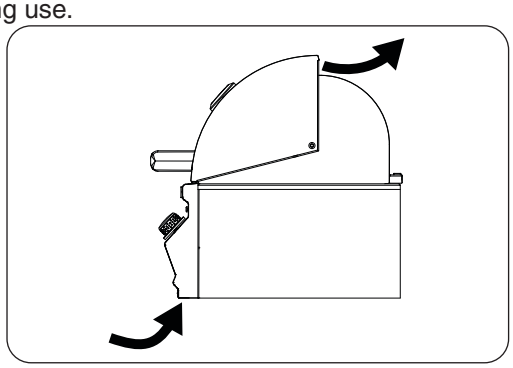

Fig. 27-1 Airflow diagram

WARMING RACK

The warming rack can be placed in two positions: the lower hooks are for use and the upper hooks are for storage. Refer to the INSTALLATION section for information on warming rack positioning.

AFTER EACH USE

1. Operate on high with hood closed for 10-15 minutes to burn off all grease.
2. Turn off the grill and brush the cooking grids to remove all residue.

CAUTION: Use long-handled insulated BBQ tools and wear an insulated glove / oven mitt.

3. When the grill is cool, check and clean the drip tray. Then cover the grill.

Note: For additional cleaning information, refer to the SERVICING AND CLEANING section.

ALLUMAGE DES INSTRUCTIONS (D'ALLUMAGE)

Lisez toutes les instructions avant l'allumage, et suivez ces instructions chaque fois vous lumière le unité.

ÉCLAIRAGE ÉLECTRONIQUE

Note: Le unité doit être relié à la puissance 120VAC pour l'éclairage électronique.

1. Ouvrez les couvercles ou enlevez les couvertures des brûleurs pour être Lit.
2. Tournez tous les boutons de commande de gaz à leurs positions de repos.
3. Allumez le gaz à sa source.

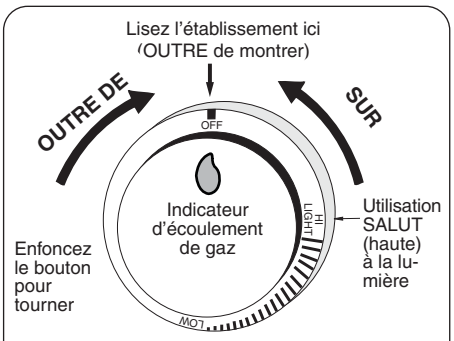

Fig. 28-1 - bouton de commande

Note: N'ouvrez pas plus d'une valve à la fois pour l'éclairage électronique ou manuel.

4. Placez le bouton de commande de temporisateur au temps de cuisson.
5. Appuyez sur le bouton de commande souhaité **pendant 5 secondes**. Assurez-vous que l'allumeur brille (à l'intérieur du tube d'éclairage), puis tout en appuyant, tournez le bouton dans le sens inverse des aiguilles d'une montre jusqu'à la position **HI LIGHT**. Une fois le brûleur allumé, relâchez le bouton.

ATTENTION : Si un brûleur ne s'allume pas dans cinq (5) secondes d'allumer le bouton de commande, enfoncez le bouton et tournez-le à la position de repos. ATTENDEZ CINQ (5) MINUTES avant de répéter l'étape 4. Si vous sentez le gaz, suivez les instructions sur la couverture de ce manuel. Si les brûleurs ne s'allument toujours pas après que plusieurs tentatives, se rapportent aux instructions pour l'éclairage manuel.

6. Répétez l'étape 5 pour que chaque brûleur additionnel soit Lit.

ÉTABLISSEMENT DU TEMPORISATEUR

Pour l'utiliser, placez le sélecteur (tourner dans le sens horaire) à l'heure souhaitée pour couper. Le cadran est marqué en 3 tranches d'une minute vingt (Toute position entre les deux est une estimation du fait que le temps). Le cadran de la minuterie rotation automatique (sens anti-horaire) et coupera l'alimentation en gaz lorsque la molette atteint **OFF** (le temps est terminé).

Important: Lorsque vous utilisez la minuterie pour des périodes de moins de vingt minutes, vous devez d'abord tourner le cadran au-delà de vingt minutes (pour l'activer), puis retour (sens anti-horaire) à la quantité désirée de temps. Cela permettra d'assurer le bon fonctionnement de la minuterie. Voir Fig. 28- 4.

ÉCLAIRAGE MANUEL

ATTENTION: Attendez toujours cinq (5) minutes le gaz pour se dégager après que n'importe quelle tentative non réussie d'éclairage.

1. Suivez les étapes 1 à 4 (à gauche).
2. Passez un allumeur brûlant de butane de long-baril ou une allumette brûlante de long-tige dans la grille à cuire s'ouvrant au dessus du tube d'éclairage. (Fig. 28-2). Pour les brûleurs de dos ou les brûleurs infrarouges, maintenez la flamme contre la surface du brûleur de brûleurs arrière / infrarouge.

   Les grils équipés d'un brûleur infrarouge comprennent un porte-allumette à rallonge métallique (fixé au plateau d'égouttage) pour faciliter l'éclairage manuel. (Fig. 28-3).
3. Tenez la flamme allumette / briquet en haut du tube d'éclairage **pendant 5 secondes** ou contre le brûleur arrière / infrarouge. Puis appuyer sur le bouton de contrôle approprié et en appuyant tourner dans le sens antihoraire à la position HI LIGHT. Retirez le briquet ou des allumettes quand le brûleur s'allume, puis relâchez le bouton de commande.
4. Si le brûleur ne se allume pas dans les cinq (5) secondes de tourner le bouton de commande, enfoncez immédiatement le bouton et tournez la valve à AU LOIN. ATTENDEZ CINQ (5) MINUTES avant de répéter les étapes 2 à 4 des instructions manuelles d'éclairage.

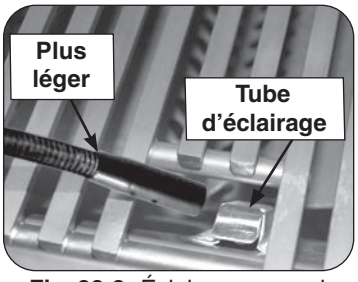

Fig. 28-2 Éclairage manuel via un tube d'éclairage

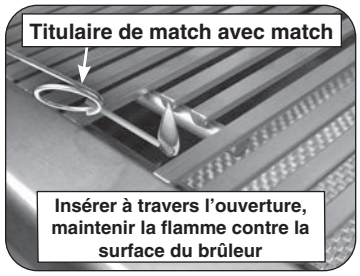

Fig. 28-3 Eclairage manuel via porte allumette

ARRÊT DU UNITÉ

Pour couper le unité, diminuez chaque bouton de commande de valve et tout en pressant tour il dans le sens des aiguilles d'une montre à la position de repos.

Fermez toujours la valve de la fourniture de gaz après chaque utilisation du unité.

Pour votre convenance et sûreté ; quand le bouton de commande est tourné a la position de fonctionnement, l'indicateur d'écoulement de gaz changera de bleu en le rouge. (Le rouge indique l'écoulement de gaz.) Voir la Fig. 28-1.

Fig. 28-4

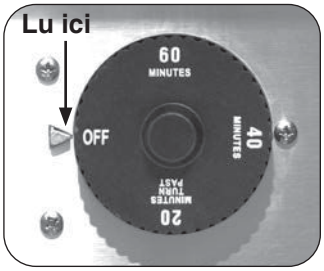

Bouton de temporisateur AU LOIN (temporisateur de 3 heures montré)

LIGHTING (IGNITION) INSTRUCTIONS

Read all instructions before lighting, and follow these instructions each time you light the unit.

ELECTRONIC LIGHTING

Note: This unit must be connected to 120VAC power for electronic lighting.

1. Open lid(s) or remove cover(s) from burner(s) to be lit.
2. Turn all gas control knob(s) to their **OFF** position(s).
3. Turn on the gas at its source.

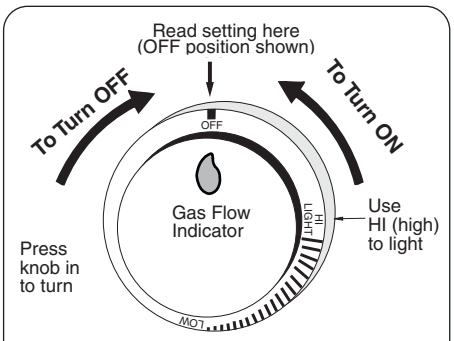

Fig. 29-1 Control knob

Note: DO NOT turn on more than one valve at a time for either electronic or manual lighting.

4. Set timer control knob to the desired cooking time.
5. Depress the desired control knob **for 5 seconds**. Ensure the igniter is glowing (inside of lighting tube), then, while pressing turn the knob counterclockwise to the **HI LIGHT** position. Once the burner lights, release the knob.

CAUTION: If a burner does not light within five (5) *seconds* of turning on the control knob, depress the knob and turn it to the **OFF** position. WAIT FIVE (5) *MINUTES* before repeating step 4. If you smell gas, follow the instructions on the cover of this manual. If the burners still do not light after several attempts, refer to the instructions for manual lighting.

6. Repeat step 5 for each additional burner to be lit.

SETTING THE TIMER

To use, set the dial (turn clockwise) to the desired time to shut off. The dial is marked in 3 twenty minute increments (any position in between is an estimate of that set time). The timer dial will auto rotate (counter-clockwise) and will shut off the gas supply when the dial reaches **OFF** (i.e. the time is completed).

Important: When using the timer for periods of less than twenty minutes, you must first turn the dial past twenty minutes (to activate), then return (counter-clockwise) to the desired amount of time. This will ensure proper timer operation. See Fig. 29-4.

MANUAL LIGHTING

CAUTION: Always wait five (5) minutes for gas to clear after any unsuccessful lighting attempt.

1. Follow steps 1 through 4 (left).
2. Insert either a burning long-barrel butane lighter or a burning long-stem match through the cooking grid opening to the top of the lighting tube (see Fig. 29-2). For backburners or infrared burners, hold the flame against the surface of the backburner/infrared burner. For sideburners, hold the flame against the burner.

   Grills equipped with an infrared burner include a wire extension match holder (attached to drip tray) to assist with manual lighting (see Fig. 29-3).
3. Hold the match / lighter flame at the top of the lighting tube **for 5 seconds**, or, against the backburner/infrared/sideburner. Then depress the appropriate control knob and while pressing turn it counterclockwise to the **HI LIGHT** position. Remove the lighter or match when the burner lights, and release the control knob.
4. If the burner does not light within five (5) seconds of turning the control knob, **immediately depress the knob and turn the valve to OFF**. WAIT FIVE (5) MINUTES before repeating steps 2 through 4 of the MANUAL LIGHTING instructions.

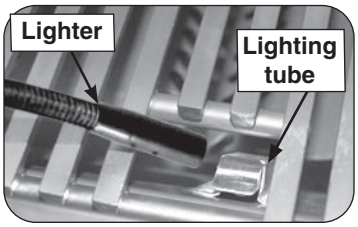

Fig. 29-2 Manual lighting via lighting tube

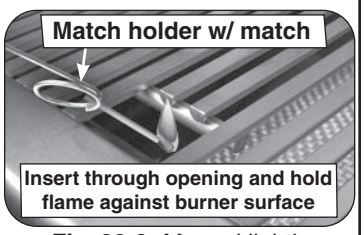

Fig. 29-3 Manual lighting via match holder

SHUTTING OFF THE UNIT

To shut off the unit, depress each valve control knob and while pressing turn it clockwise to the **OFF** position.

Always close the valve from the gas supply after each use of the unit.

For your convenience and safety; when the control knob is turned to the on position, the gas flow indicator will change from blue to red. (Red indicates gas flow.) See Fig. 29-1.

Fig. 29-4

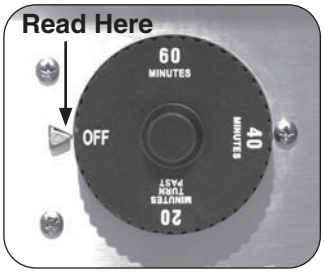

Timer knob in OFF position

OPTIONAL ROTISSERIE INSTRUCTIONS

CAUTION: **WHEN USING THE BACKBURNER; KEEP THE OVEN LID CLOSED TO PREVENT HEAT LOSS, PROVIDE PROPER CONVECTION, AND PROVIDE PROPER VENTING. THIS WILL ENSURE EVEN COOKING TEMPERATURES.**

DO NOT KEEP YOUR OVEN LID OPEN DURING ROTISSING, AS THIS MAY CAUSE PERSONAL INJURY, OR IN SOME CASES, IN WINDY CONDITIONS, DAMAGE TO THE GRILL.

DO NOT USE THE ROTISSERIE MOTOR IN THE RAIN. DO NOT LEAVE THE MOTOR ON THE GRILL WHEN NOT IN USE.

1. Set the warming rack to storage position, remove the backburner cover and cooking grids (see Fig. 30-1).

Note: Remove the flavor grids only if large meats require the clearance. The warming rack may also be removed if needed.

2. Slide the rotisserie motor fully onto the motor bracket located on the right side of the grill (see Fig. 30-2) and connect it to a power source (do not turn on).
3. Remove the rotisserie rod from the grill rear bracket and attach knob (if equipped). Clean the rod if needed.
4. Slide the left meat holder onto the rod and tighten (see Fig. 30-3, A).
5. Then slide meat onto the rod, followed by the right meat holder (see Fig. 30-3, B and C).
6. Slide the meat into the left holder, then the right holder into meat. Tighten the right meat holder. Be sure the meat is centered and balanced as well as possible, and the holders have a good grip on the meat.
7. Hold both ends of the rod so it settles freely (do not grip tightly). Allow the rod to rotate until the heavy side of the meat rests downward.
8. The counterbalance may then be attached to even weight distribution. Slide the counterbalance onto the rod next to the right meat holder (see Fig. 30-3, D). Loosen the arm and point it upward opposite the heavy side of the meat. Tighten the arm.
9. Slide the counterbalance weight up or down the arm until the rod rotates most evenly then tighten thumb screw (see Fig. 30-3, D).
10. Insert the pointed-end of the rod into the motor drive socket (see Fig. 30-4, E). Then rest rod groove (next to the knob) into the left support bracket (see Fig. 30-4, F).
11. To keep meat drippings off the burners and to simplify cleanup, place Fire Magic drip tray liners under the meat, if desired.
12. Press the motor power switch to start.
13. Light the backburner per the lighting instructions in this manual (or on drip tray handle) and close the oven lid.

Important: Turn the backburner to low or off when stopping the rotisserie to prevent overcooking.

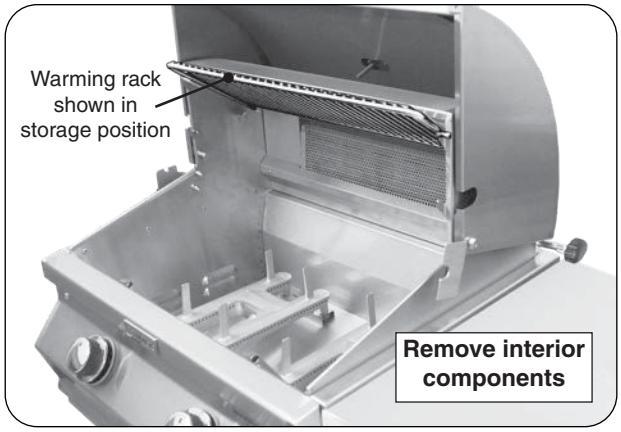

Fig. 30-1 Prepare grill for rotissing

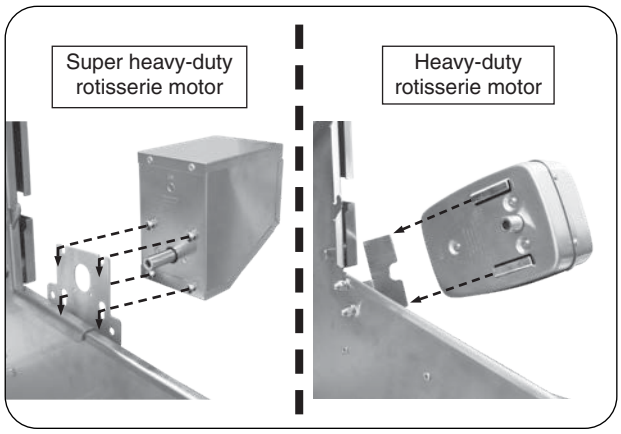

Fig. 30-2 Install rotisserie motor

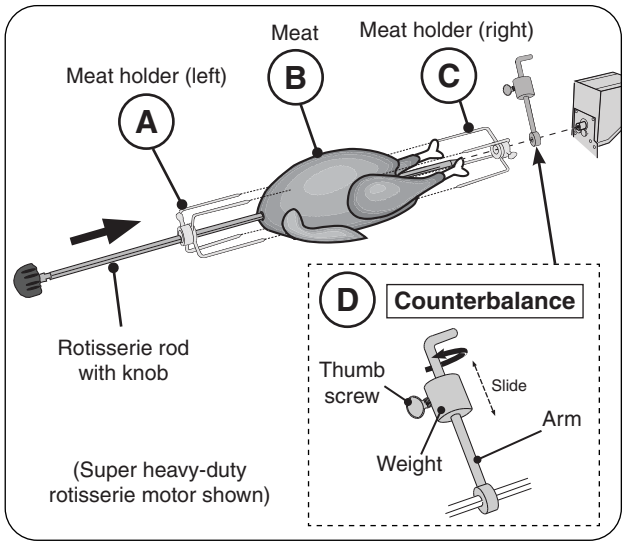

Fig. 30-3 Assemble rotisserie rod for cooking

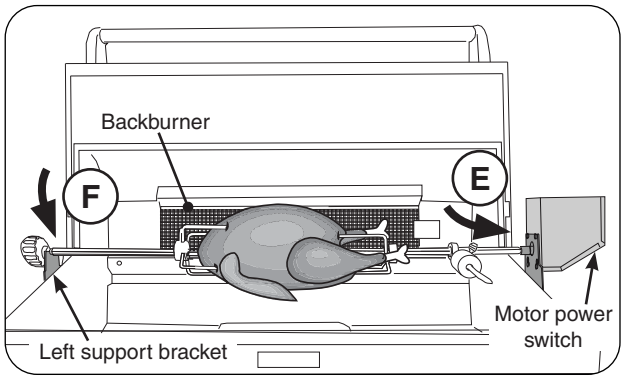

Fig. 30-4 Attach Rotisserie rod to motor

OPTIONAL INFRARED BURNER OPERATION

The infrared searing burner (optional) cooks with a powerful radiant heat.
Light the infrared burner following the LIGHTING INSTRUCTIONS found this manual or printed on the grill's drip tray. When lighting manually, use the wire extension match holder included with this kit to safely hold a lit match. Follow these guidelines when operating the Infrared burner:

- **DO NOT place food on the cooking grid until the infrared burner glows orange (Fig. 31-3).** Drippings are heated and evaporate instead of sticking to and impairing burner function.
- **Always leave your burner on (after cooking) for an additional 5 minutes, to allow for a burnoff period. This is important to keep your burner clean and operating properly.**
- Refer to the CARE, CLEANING, & MAINTENANCE GUIDE provided with your grill for details on deep cleaning.
- When not in use, **always** cover the infrared burner with the stainless-steel cover. This protects the burner from drippings (from other cooking), water, airborne particles, and foreign objects (Fig. 31-2).

Important: Clean burners allow the gas to circulate and burn over the entire heating surface for powerful and even cooking.

- Do not strike or scrape the ceramic portion of the burner as it may chip, crack, or break (Fig. 31-2).

Important: When grilling with the infrared burner, always place a cooking grid above it. The cooking grid must be removed for rotisserie cooking.

CAUTION: Never attempt to operate the infrared burner with the protective cover in place.

WARNING

Only handle the infrared burner cover when the unit is cold or with a well-insulated long-handled tool or heat resistant gloves.

Drips and particles evaporate before hitting infrared burner when cooking at the maximum setting.

Note: Flavor grids are not to be used with infrared burners.

To ensure proper operation, all infrared burners (back and main) must be operated on the HI setting for a minimum of 10 minutes. Thereafter, the flame may be lowered as desired.

CAUTION: Always monitor the infrared burner flame when operated on low, as it may blow out in high-wind conditions.

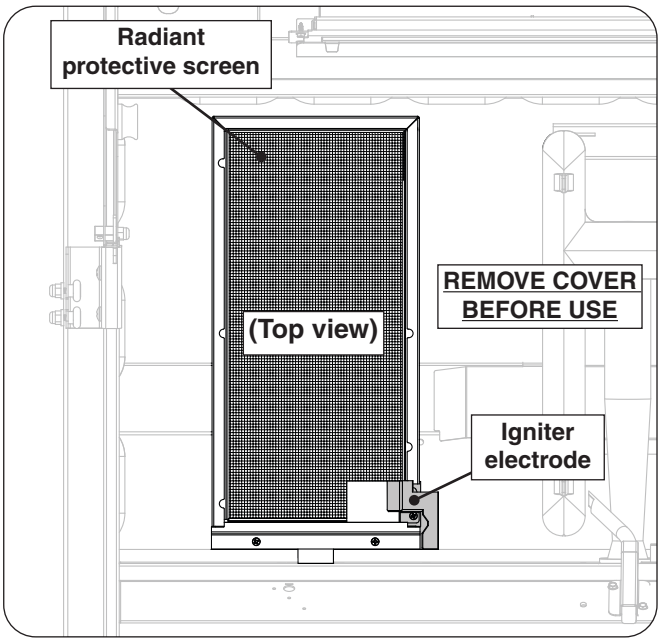

Fig. 31-1 Infrared burner overview

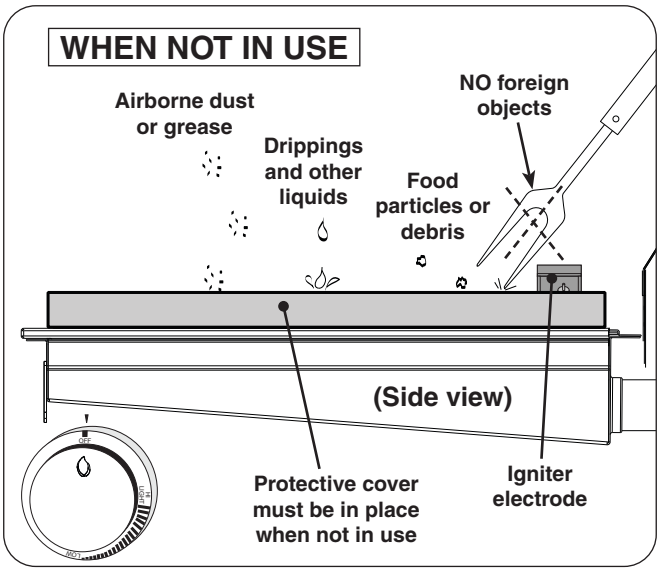

Fig. 31-2 Infrared burner - WHEN NOT IN USE

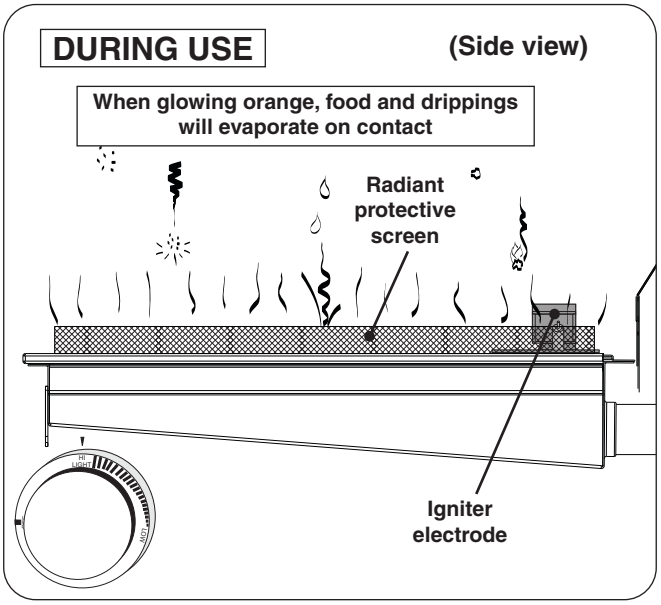

Fig. 31-3 Infrared burner - DURING USE

SERVICING AND CLEANING

Your grill requires regular cleaning and maintenance. Refer to these instructions for details. Performing these procedures will ensure proper operation, appearance, and safety.

WARNINGS

- Prior to servicing or cleaning make sure the unit is completely cool, the control knobs are turned to the OFF position, the gas supply is shut off, the light switch is off, and the power supply is disconnected (as applicable and unless otherwise stated).
- Wear appropriate gloves and safety glasses during any servicing or cleaning.
- DO NOT spray any cleaner or liquids on the grill when hot.
- The grill MUST be cleaned regularly to prevent grease build-up and other food deposits. A clean and well maintained grill prevents the risk of grease build-up and grease fires.
- Verify proper operation after servicing or deep cleaning.
- See INSTALLATION, OPERATION, AND SAFETY INFORMATION section for additional related information.

CLEANING YOUR GRILL

Before Each Use

1. **Inspect and clean the exterior surfaces of the unit:** With a cool grill, clean any dust, grease, splatter, or spills as needed with a damp clean cloth.

After Each Use

1. **Perform a burn-off and clean the cooking grids:** Operate the grill on high with the hood closed for 15 minutes to burn-off food and grease and allow for an easier cooking grid clean. Then turn OFF the grill and use a grill brush to clean the cooking grids of all residue. Use long-handled insulated BBQ tools and wear an insulated glove / oven mitt.
2. **Check and clean your drip tray:** When the grill is cool, carefully remove the drip tray and dispose of contents appropriately. If tray is equipped with a liner, dispose of the liner. Clean tray in a soapy water solution if needed. For tough deposits, a copper pad can be used. Rinse and dry completely. Replace a new liner and insert the tray back into the grill. Order more drip tray liners through your local dealer.
3. **Cover your grill:** Once the grill is dry and cool, cover your grill with a Fire Magic protective cover (not included).

Twice A Year (or as needed) - Deep Clean

1. **Interior of grill:** In addition to cleaning the cooking grids and drip tray, a deep clean of the interior of the grill, burners, and all components MUST be performed twice year (or as needed depending on use). Refer to the CARE, CLEANING, & MAINTENANCE GUIDE provided with your grill, or simply scan the QR code on the right.

Important: The burner ports and carry-over ports/slots MUST be kept clean to ensure proper ignition and operation. The guide provides all details on cleaning.

2. **Exterior of grill:** With a cool grill, use a grill cleaner (or a soapy water solution) and a clean cloth to remove grease and dirt from the outside of the grill. For tough deposits, a copper pad can be used. Always wipe with the grain. Rinse and dry completely. Then follow up with a stainless steel cleaner and a clean cloth. To clean the magic view window (if equipped), use a quality brand glass cleaner. DO NOT use other cleaners or chemicals.

   If this routine cleaning is not performed, the stainless steel may become dull and develop surface rust (due to use and atmospheric conditions). If left uncleaned, significant damage and pitting may occur.

Fig. 32-1 Wipe with grain

Important: DO NOT use steel wool, any other metal tools, or any other cleaners/chemicals to clean the exterior other than recommended above. Such items promote rust.

Note: Due to the nature of stainless steel, temperatures produced by the grilling process will cause discoloration. This can be reduced by routine cleaning.

For Environments High In Salt, Chloride, Or Other Corrosive Chemicals

When this grill is installed in a corrosive environment such as near the ocean (salt air), poolside (chlorine and/or pool chemicals) or any other location with exposure to high salt/chloride content or corrosive chemicals/solutions, it will be more susceptible to corrosion and MUST be maintained/cleaned more frequently.

- DO NOT store any corrosive chemicals (chlorine, hydrochloric acid, fertilizer, etc.) near your stainless steel grill.
- DO NOT allow any corrosive materials (masonry dust, debris, etc.) to settle on your stainless steel grill.
- These environments, chemicals, and materials may cause the 304 stainless steel to develop surface rust and consequently pitting. Under these conditions the grill exterior MUST be cleaned at least monthly. Inspect your grill often and clean accordingly.

Protecting Your Grill

An optional Fire Magic protective cover will protect your grill when not in use. Install the cover on a cool and dry grill. DO NOT cover a damp grill. During high humidity or after rainy conditions, remove the cover to dry trapped moisture if present. (If the cover is installed over a damp grill it can cause surface rust.)

Ensure that the INSIDE of the cover is DRY before putting it back on the grill.

REPLACING HALOGEN BULBS

Your grill is engineered with the conveniences of electrical power for illuminating and igniting the grill.

To replace any interior oven light, follow the instructions below.

Important: ONLY REPLACE WITH 12V / 10 WATT HALOGEN BULB(S).

WARNING

To protect from potentially sharp sheet metal and glass, wear gloves and safety glasses during this procedure.

1. Turn all burner control knobs to the **OFF** position and shut off the gas supply to the grill at the source (tank valve for propane units or gas line shut-off valve for natural gas units.)
2. Disconnect supply of external electrical power to the grill.

CAUTION: Wait for the grill, oven, lens, light bulb, and fixture to cool before proceeding to the next step.

3. Open the oven lid.

Important: Place one hand directly below the glass lens and prepare to catch it when it is detached.

4. Carefully insert a standard flat head screwdriver or thin plastic spatula between the glass lens and the stainless steel on which the light is mounted and gently pry the glass lens out in such a way that the stainless steel is not scratched (twisting the screwdriver handle, for instance). Catch the lens and set it safely aside.

Note: You may wish to take this opportunity to clean the lens with a standard household window cleaner and then dry it completely.

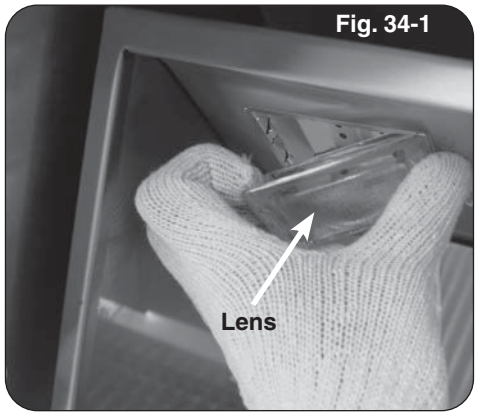

Fig. 34-1

5. Wearing a pair of gloves, reach into the fixture, gently grab the bulb, and pull it straight out of the fixture so that the two pins at the base of the bulb come all the way out.

Important: Bulb is halogen. DO NOT TOUCH with bare hands. Oils from hands drastically reduce bulb life.

Note: It may be helpful to rock the bulb gently backward and forward while pulling it out.

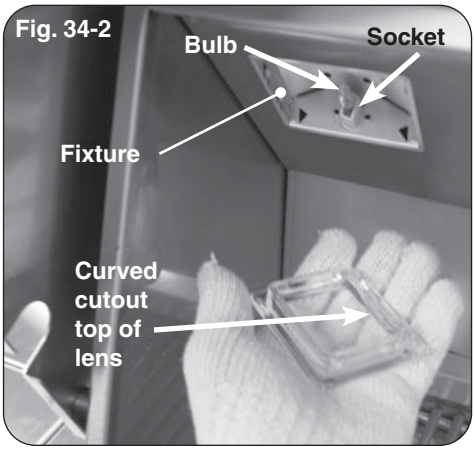

Fig. 34-2

6. Inspect the old bulb for broken glass or filament.

Note: It may be beneficial to test a suspect bulb in one of the other light fixtures known to be working and turn the power back on to be certain the bulb is actually not working.

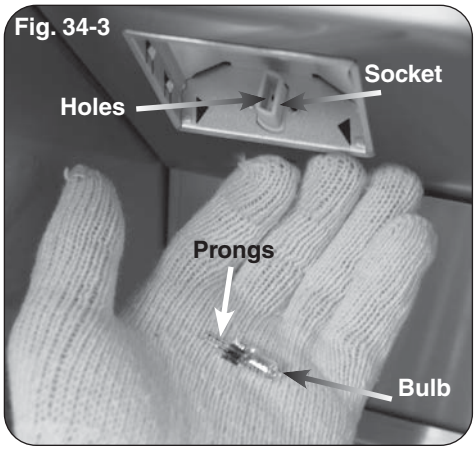

Fig. 34-3

7. Insert the new **12V / 10 watt** halogen bulb into the socket so that both pins slide all the way into the two holes in the bottom of the socket.
8. Place the lens back into the fixture opening with the curved cutout on the bottom and snap it back into place.

CONTROL PANEL REMOVAL

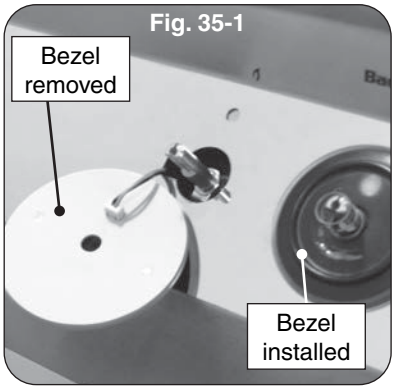

Fig. 35-1

1. **Turn the control knob(s) to the OFF position and turn off the gas supply to the unit.**
2. Turn off the light switch and disconnect the power supply from the power source.
3. Pull the control knob(s) from the stems and set aside.
4. Slowly lift the lighted bezels to clear the valve stems, and let rest as shown in Fig. 35-1.
5. Remove the drip tray.
6. Using a Phillips screwdriver, unscrew and remove the control panel fastener screws and washers (located on the left and right front face of the control panel). Retain the screws for later re-installation.
7. Carefully open the control panel by lifting and pulling the control panel from the frame, allowing it to rest on the internal chain(s).

Important: When opening, take caution to not damage any wiring.

8. If wire disconnections are required, reference the wire diagram in the MODEL SPECIFICATIONS section in this instruction manual or the wire diagram label affixed to the inside of the control panel.

Note: Secure any disconnected wires (coming from the inside of the unit) to prevent them from falling in.

Note: Whenever reconnecting <u>any wires</u>, apply a small amount of dielectric grease to the <u>male</u> connector, then make the connection. This will ensure conductivity and prevent moisture from affecting the contact.

Important: During reinstallation; prior to opening the gas shut-off valve, be sure the control knob(s) are in the OFF position.

SYSTEM RESET

If the unit is connected to the power supply but the ignition system and grill components are not functioning, the power supply is likely to be in "protection mode" and a system reset will need to be performed.

1. **Ensure the knobs are in the OFF position, the gas supply is turned off, and the light switch is off.**
2. Disconnect the harness from the power supply (see Fig. 36-1, A).
3. Disconnect the power supply from the power source. (see Fig. 36-1, B).
4. Check/replace any harnesses as needed.
5. Ensure the power GFCI breaker is reset.
6. Reconnect the power supply to the power source, then connect the harness to the power supply.
7. Test all components.

Note: The green LED light on the power supply indicates it is working properly.

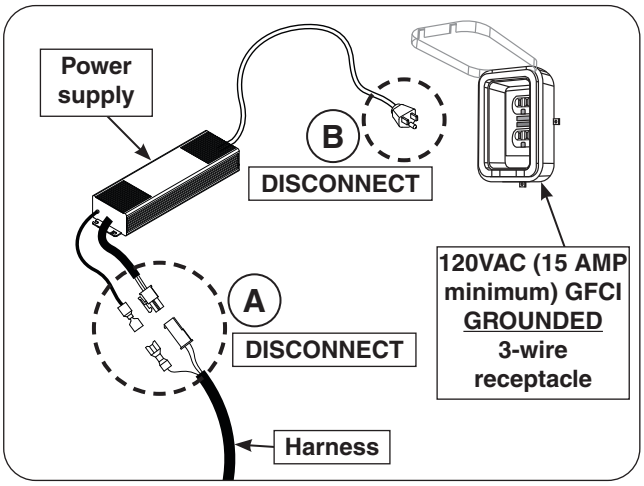

Fig. 36-1 Perform system reset

MAIN BURNER REMOVAL

1. Remove the cooking grid and flavor grid from above the burner that is to be removed and set them aside.
2. Locate and remove the cotter pin from the left or right rear burner anchoring peg by pulling it straight out of the cotter pin hole using fingers or needle-nose pliers. See Fig. 36-2.
3. Carefully lift the burner from the burner support and out from the hole in the forward fire wall. See Fig. 36-3.
4. To replace the burner, slide the open cylindrical end of the burner around the orifice, enveloping it and centering on it. Then lower the back end anchor pegs into the burner support anchor peg holes.

Note: It is critical to the continued safe functioning of the burners that the orifices are centered and completely inside the burner gas inlets.

5. Re-install the cotter pin into the rear burner anchor peg using fingers or needle-nose pliers.
6. Replace the flavor grid and cooking grid.
7. Repeat these steps for the other burner(s), if needed.

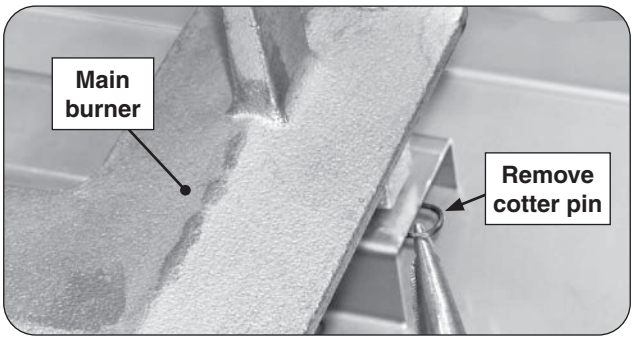

Fig. 36-2 Remove cotter pin

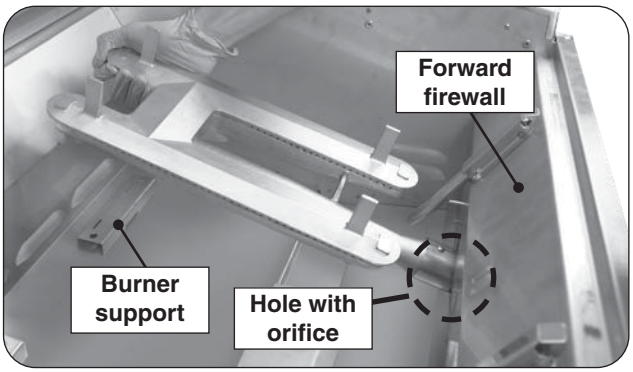

Fig. 36-3 Remove main burner

INFRARED BURNER REMOVAL (if equipped)

To completely remove the infrared burner, follow the steps above for the main burner removal with the addition of disconnecting the infrared electrode assembly prior to lifting the burner. See Fig. 36-4.

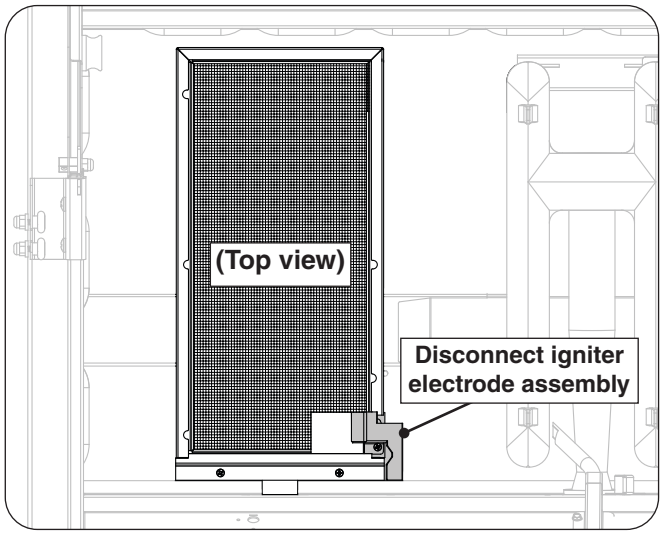

Fig. 36-4 Infrared burner removal

CONVERT GAS TYPE / CHECK BURNER ORIFICES

CAUTION: Make sure the grill is at a safe temperature and isolated from gas and electrical supplies before beginning.

For your safety, exercise caution, and make sure you have adequate hand protection, such as gloves, when handling metal parts.

Apply Conversion Label

This grill comes from the factory configured for one type of gas as marked on the label behind the control panel.

When the grill is converted, the label for the new gas (included at original shipping) MUST be filled out and applied next to the existing label mentioned above.

Convert Regulator

The gas regulator, located behind the control panel, must be set for the type of gas used to fuel the grill. To check the regulator setting, remove the cap in the center of the regulator (Fig. 37-1, A). Holding the cap vertical (see Fig. 37-1, B), the letters at the bottom of the plastic stalk indicate the gas type for which the regulator is currently configured.

If the text on the bottom of the regulator stalk does not match the gas type connected to the grill, remove the stalk from the cap, invert, and replace into center of cap. Replace cap on the regulator, screwing down until snug.

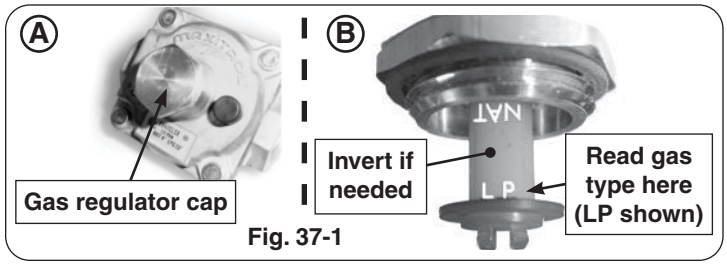

Fig. 37-1

Convert Gas Orifices

When converting the grill to a different gas type, each burner's orifice must be replaced with the corresponding orifice for the new gas.

See Table 1 to determine the proper orifice sizes for each burner.

See the following sections for details on orifice conversion.

Important: It is critical to the operation of each burner that its orifice be fully inserted into the center of its orifice opening.

WARNING

HAZARDOUS OVERHEATING WILL OCCUR IF A NATURAL-GAS ORIFICE IS USED WITH PROPANE GAS.

Connect To New Gas Supply

Plumb the unit as appropriate for the new gas supply. (Additional components may be needed for your specific setup.) **Be sure to leak test at all connections.**

Convert/Check Main Burner Orifices

1. Remove the cooking grids and flavor grids and set them aside.
2. Remove the burners (see the BURNER REMOVAL section for step-by-step instructions).
3. Use a $^3/_8$" hex nut driver to remove the exposed orifices (Fig. 37-3). Check orifices. If needed, replace them with the correct orifices for the new gas.
4. Replace the burners (see the BURNER REMOVAL section).

Note: It is critical to the continued safe functioning of the burners that the orifices are centered and completely inside the burner gas inlets.

5. Replace the flavor grids and the cooking grids.

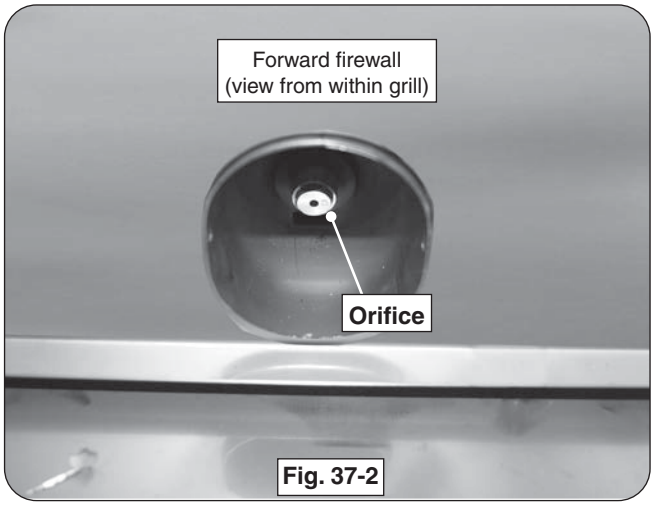

Fig. 37-2

Convert/Check Backburner Orifice (if equipped)

1. Remove the cooking grids and warming rack if installed and set them aside.
2. Remove the backburner cover.
3. Unscrew all backburner access plate screws using a Phillips-head screwdriver and set them aside.

4. Remove the access plate by pulling the bottom toward the front of the grill and rotating it upward and outward until the two top tabs attached to back wall of the oven can be removed from the slots in the top of the plate.
5. Remove the backburner assembly retaining screw on the lower left of the backburner using a Phillips-head screwdriver and set it aside.
6. Pull out the wire from the igniter electrode (Fig. 38-2), then carefully remove the backburner by slightly sliding it to the left.

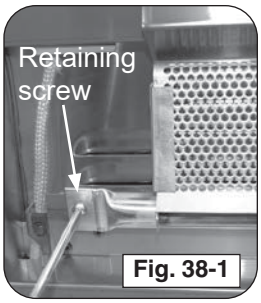

Fig. 38-1

CAUTION: Be careful not to damage the wires connected to the backburner assembly.

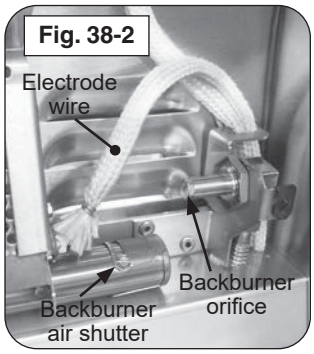

Fig. 38-2

7. Use a $^3/_8$" hex nut driver to remove the exposed orifice. Check orifice. If needed, replace it with the correct orifice for the new gas.
8. Replace the backburner assembly and reinsert the retaining screw. Center the backburner assembly so that the backburner plate will fit over it. Tighten the retaining screw using a Phillips-head screwdriver.
9. Replace the access plate by first inserting the tabs above into the slots in the top of the plate and then rotating the bottom downward and inward.
10. Replace all the access plate screws using a Phillips-head screwdriver.
11. Replace the cooking grids and warming rack.

Convert/Check Infrared Burner Orifice (if equipped)

1. Remove the cooking grid from above the burner.
2. Using a Phillips-head screwdriver, unscrew and detach the electrode assembly from the infrared burner body.
3. Remove the infrared burner by lifting the back of the burner up so that both tabs are freed from their slots, then lift the burner toward the back of the fire box and upward. Set the burner aside.
4. Use a $^3/_8$" hex nut driver to remove the exposed orifice. Check orifice. If needed, replace it with the correct orifice for the new gas.
5. Replace the infrared burner by first sliding it over the orifice, then lowering the two tabs under the back of the burner into the slots in the back burner rest.
6. Reattach the electrode assembly and replace the grid so that the cutout section is in front.

AIR SHUTTER ADJUSTMENT / BURNER FLAME INSPECTION

Important: Air shutters are preset at the factory (see Table 1 in MODEL SPECIFICATIONS). However, gas conversion, altitude, or other local conditions may make it necessary to adjust the air shutters.

Note: Infrared air shutters are not adjustable.

Note: To verify proper settings, the flames of the burners should be visually checked for proper flame appearance and behavior. Light the grill with the burner(s) on HI setting. Allow at least 2 minutes to burn. See below and Fig. 39-1. The flames should:

- be blue and stable with little to no yellow tips
- burn quietly, and appear to touch the burner
- For backburners, the flame will appear along the bottom of and behind the backburner grating. (The grating itself will glow red after it heats up.)

If the flames appear unstable, yellow, noisy, or lift away from the burner, locate the appropriate section for your burner type, and follow the steps.

Main Burner

Begin with a completely cool grill. Remove the burners (see BURNER REMOVAL section). First ensure the burner orifice, ports, venturi tubes, and air shutter are all clear of any insect or insect nests. If they are blocked, clean them, reinstall the burners, and reinspect the flames. If adjustment is still needed, **allow the unit to cool**, remove the burner, and proceed to the steps below.

1. To adjust the air shutter, loosen the adjustment screw with a Phillips screwdriver. Then slide the shutter to open or close it. See Fig. 39-2 for details.
   - Begin with the appropriate factory setting for your model (see Table 1 if needed).
   - If the flames were excessively yellow (insufficient air), open the shutter to allow more air to the burner. If the flames were noisy and lifting off the burner in some areas, close the shutter to allow less air to the burner. Adjust accordingly.

Note: Make minimal adjustments. Very small changes result in major changes in flame appearance.

2. Reinstall the burner, light the grill with the burner on HI, and observe the flames. If needed, allow the grill to completely cool, and repeat the adjustment process until the proper flame is achieved.
3. Once finished, allow the grill to completely cool, remove the burner, and tighten the adjustment screw. Reinstall the burner and all other components that were removed.
4. Repeat for all other main burners as needed.

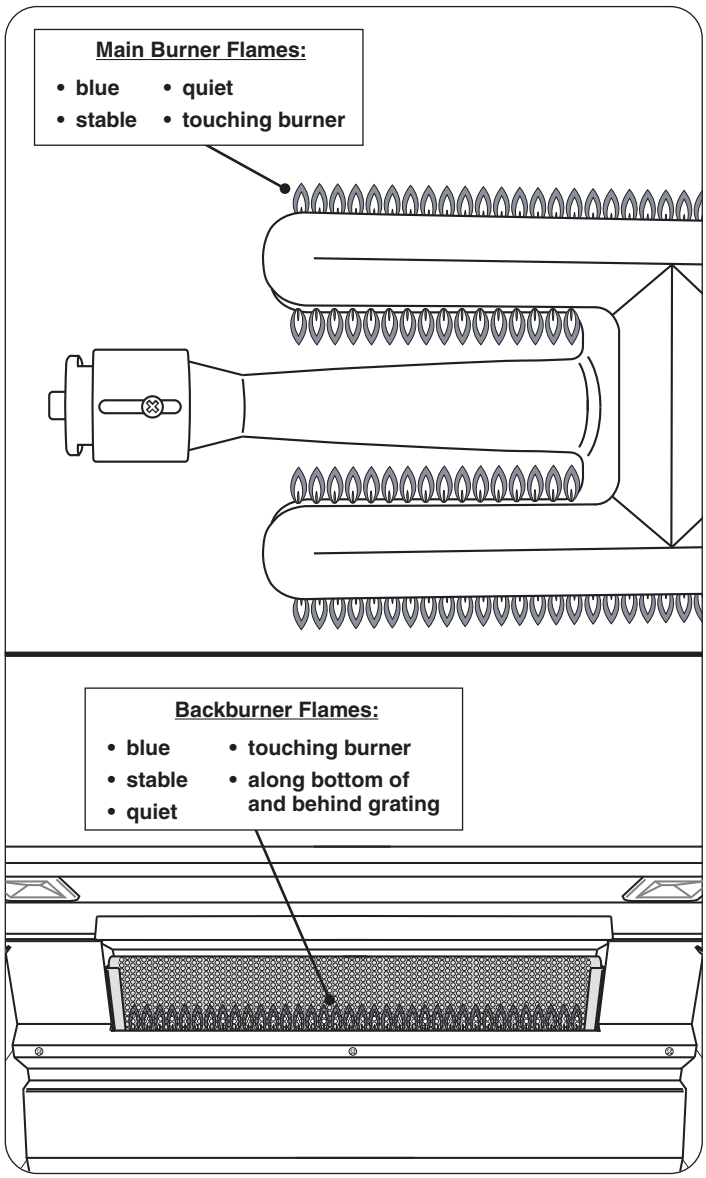

Fig. 39-1 Proper flame appearance

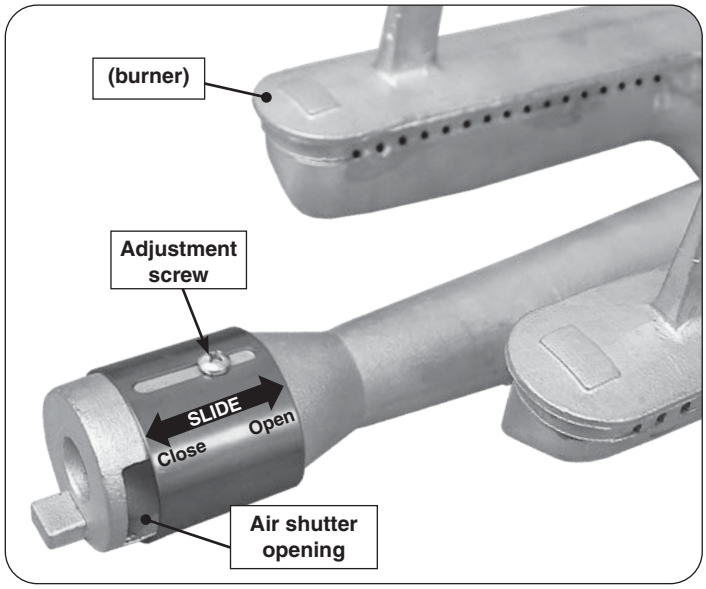

Fig. 39-2 Main burner air shutter adjustment detail

Backburner (if equipped)

Begin with a completely cool grill. Remove the backburner (see CONVERT/CHECK BACKBURNER ORIFICE in the CONVERT GAS TYPE / CHECK BURNER ORIFICES section). First ensure the burner orifice, ports, venturi tube, and air shutter are all clear of any insect or insect nests. If they are blocked, clean them, reinstall the burner, and reinspect the flames. If adjustment is still needed, proceed to the steps below.

Note: The backburner air shutter can be safely adjusted with the backburner lit if it is adjusted using a long-handled screwdriver or well-insulated fire and heat-resistant gloves.

1. To adjust the air shutter, first light the backburner on HI.
2. Loosen the adjustment screw with a flathead screwdriver, then carefully rotate the shutter to open or close it. See Fig. 40-1 for details.
   - Begin with the appropriate factory setting for your model (see Table 1 if needed).
   - If the flames along the bottom of the backburner are excessively yellow (insufficient air), open the shutter to allow more air to the burner. If the flames are noisy and lifting off the burner in some areas, close the shutter to allow less air to the burner. Adjust accordingly.

Note: Make minimal adjustments. Very small changes result in major changes in flame appearance.

3. Once finished, carefully re-tighten the adjustment screw and shut off the backburner.
4. Allow the unit to cool completely, then re-install all components that were removed.

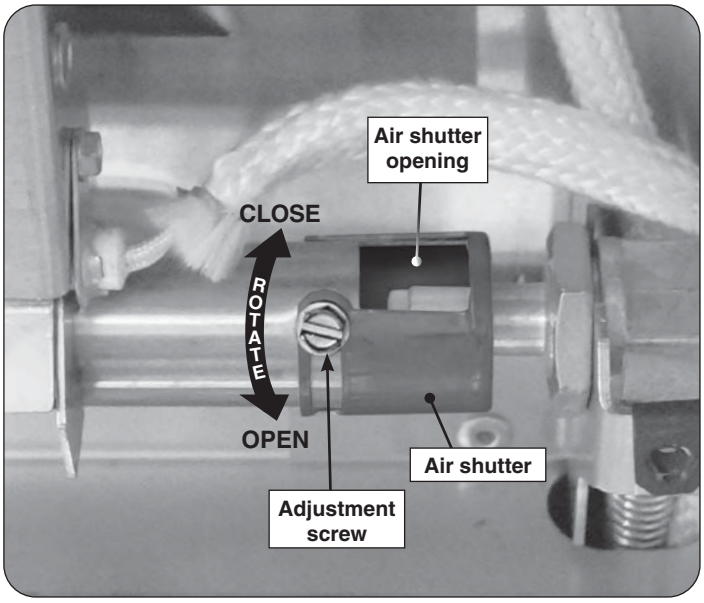

Fig. 40-1 Backburner air shutter adjustment detail

VALVE "LOW" SETTING ADJUSTMENT

Stability of the "low" setting on main burners, and infrared burners may vary due to wind direction, grill configuration, and grill position. If your burner goes out when set on low, the valve "low" setting needs adjustment.

Note: Adjustments MUST only be performed by a qualified professional service technician.

Important: **The valve "low" setting for the backburner must remain at the factory setting.** It is recommended to only use the backburner at a medium to high setting.

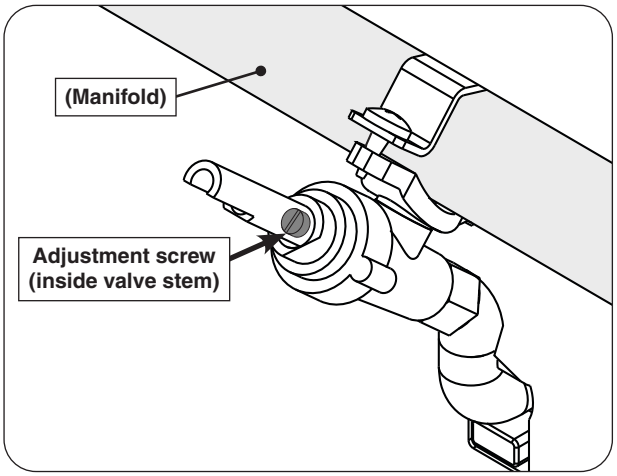

Fig. 41-3 Valve adjustment screw location

To adjust the valve "low" setting:

1. **Ensure the unit is completely cool and the knobs are in the OFF position.**
2. Remove the cooking grids and flavor grids.
3. Light the burner on HIGH, then turn the burner to LOW setting. While the burner is lit, remove the control knob from the valve.
4. Locate the FLATHEAD adjustment screw found inside the valve stem (see Fig. 41-1).
5. Using a flathead screwdriver, slowly turn the adjustment screw a little at a time (30° to 45°) in either direction. Adjust the screw as needed until the flame is approximately 1/4" in height from all the burner ports, and the flames are stable.
6. Once the appropriate setting is reached, re-install the control knob and shut off the burner valve.
7. Repeat this procedure for other burner valves, if needed.
8. Re-install the control panel, flavor grids, cooking grids, and any other components that were removed.

NOTES PAGE

Please use this page to record any information about your unit that you may want to have at hand.

TROUBLESHOOTING

If you have trouble with the unit, please use this list to identify the problem. By trying one or more of the solutions to the possible cause, you should be able to solve the problem. If this list does not cover your present problem, or if you have other technical difficulties with the unit, please contact your local dealer.

PROBLEM	POSSIBLE CAUSE	CORRECTION
Ignition system failure	1. Power supply failure	1a. Power supply in protection mode - perform system reset: Disconnect harness from power supply, then power supply from power souce. Check/replace harnesses as needed. Ensure power GFCI/RCD breaker is reset. Reconnect power supply, then harness extension. Test grill components. If still not working, replace power supply. Green LED light on power supply indicates it is working properly. 1b. Replace power supply.
	2. Improper air shutter adjustment	2. Adjust air shutters.
	3. Ignition wire disconnected	3. Reconnect wires into wire harness.
	4. Low gas pressure	4. Have the gas co. check supply pressure.
	5. Front carry-over port	5. Clean burner ports.
	6. Igniter switch malfunction on valve	6. Contact dealer for replacement.
	7. Igniter malfunction	7. Contact dealer for replacement.
Insufficient heat / low flame	1. Burner ports clogged	1. Clean burner ports. Burner maintenance kit available, see Table 1.
	2. Improper air-shutter adjustment	2. Adjust air shutters.
	3. Using propane orifice for natural gas	3. Check/change orifices.
	4. Low gas pressure/flame (propane)	4. Shut off all valves, including propane tank, and follow lighting instructions exactly. (See important note* below.)
	5. Low gas pressure/flame (natural)	5. Have a qualified professional service technician check for proper gas supply, setup, and pressure.
	6. L.P. regulator hose cracked due to age	6. Replace L.P. regulator hose.
Uneven heating	1. Burner ports partially blocked by debris	1. Remove burners and clean out ports.
	2. Small spiders or insects in burner	2. Inspect burners and orifices for spider webs or other debris that may block flow.
	3. Improper air shutter adjustment	3. Adjust air shutter.
Rotisserie noisy	1. Rotisserie out of balance	1. Adjust rotisserie counterbalance.
Burner goes out on LOW	1. Valve “Low” setting needs adjustment	1. Light burner on HIGH, immediately turn to LOW setting. Remove knob from valve and using a small flat screwdriver, slowly turn the adjustment screw in the stem, a little at a time (30° to 45°), in either direction, until the flame is approximately 1/4” in height from burner ports.
Interior oven lights and knob lights not operating	1. Light switch not functioning	1. Re-connect external power to grill or contact dealer for replacement.
	2. Interior or knob lights burned out	2. Contact dealer for replacement.
	3. Power supply failure	3. See 1a of **Ignition system failure** section above and/ or replace power supply.
No power to grill	1. Input power source failure	1. Check GFCI / circuit breaker.
	2. Power supply failure	2. See 1a of **Ignition system failure** section above and/ or replace power supply.

Note: *Propane tanks are equipped with a safety shutdown device that may cause low or no gas/flame at the burners if operating and lighting instructions are not followed exactly. **If you suspect the propane tank safety shutoff is in effect:** 1) Shut off all grill valves. 2) Shut off tank valve. 3) Open and close a main burner valve. 4) Open tank valve. 5) Follow the LIGHTING INSTRUCTIONS. Lighting instructions are located in the owner’s manual and printed on the unit's metal drip tray. If the problem persists, continue troubleshooting, or contact your local dealer or distributor for assistance.

WARRANTY

PETERSON FIRE MAGIC GRILLS AND ACCESSORIES

LIMITED WARRANTY

Robert H. Peterson Co. ("RHP") warrants your Fire Magic® grill to be free from defects in material and workmanship.

Fire Magic® cast stainless-steel gas burners, Choice stainless steel U-shaped burners, cooking grids, and stainless steel housings are warranted as long as you own your Fire Magic® grill **-- LIFETIME**. (Except as described below.)

Fire Magic® valves, manifold assemblies, inner liners, porcelain housings (including ovens and barbecue faces), and **backburner assemblies** (except ignition parts) are warranted for **FIFTEEN (15) YEARS**.

Fire Magic® Electric Grills, stainless steel cooking grids and stainless steel housings are warranted for **TEN (10) YEARS**.

Fire Magic® built-in and portable griddles (except ignition system) are warranted for **TEN (10) YEARS**. (Except as described below.)

Fire Magic® Infra-red burners, flavor grids, and charcoal stainless steel grills are warranted for **FIVE (5) YEARS**; except for the charcoal pan, charcoal grid, thermometer, and ash catch tray, which are warranted for **ONE (1) YEAR**.

Fire Magic® sideburners, exterior Glass Fiber Reinforced Concrete (GFRC) grill island systems, and all other grill components (except ignition systems and electronic parts) are warranted for **THREE (3) YEARS**.

Fire Magic® grill and griddle ignition systems (excluding batteries), electronic components (including lights and thermometers), and grill accessories are warranted for **ONE (1) YEAR**.

A COPY OF YOUR SALES SLIP FOR PROOF OF PURCHASE IS REQUIRED

This warranty applies to the original purchaser for products which are installed in the United States or Canada and which are operated and maintained as intended for single family residential usage (If the grill is installed in a multi-user setting, a separate Multi-User Limited Warranty applies and is available from R.H. Peterson Co.). This warranty is valid only with proof of purchase, commence on the date of purchase, and terminates (both as to original and any replacement products) on the anniversary date of the original purchase of the product per the above schedules.

This warranty covers defects in material and workmanship. This warranty **does not** cover parts which become defective as a result of negligence, misuse, use not in compliance with the Installation and Owner's Manual, accidental damage, improper handling, improper storage, improper installation, **lack of required routine maintenance** (as specified in the Installation and Owner's Manual), electrical damage, local gas impurities or failure to protect against combustibles. Product must be installed (and gas must be connected) as specified in the Installation and Owner's Manual by a **qualified professional installer**. Modifications to products which are not specifically authorized will void this warranty. Accessories, parts, valves, remotes, etc. when used must be Peterson products or this warranty is void. Warrantied items will be repaired or replaced at Peterson's sole discretion. This warranty **does not** apply to rust, corrosion, oxidation, or discoloration unless the affected part becomes inoperable.

This warranty **does not** cover labor or labor related charges, except as provided by separate specific written programs from the Peterson Co. All repair work must be performed by a qualified professional service person and requires prior approval of Peterson.

Peterson may require the defective product or part to be returned to the factory to determine the cause of failure. Peterson will pay freight charges if the product or part is determined to be defective. This warranty does not cover breakage in shipment from our (Independent) distributor to its customer if the damage is determined to have occurred during that shipment.

This warranty specifically excludes liability for **indirect**, **incidental**, or consequential damages. Some states and provinces do not allow the exclusion or limitation of incidental or consequential damages, so the above exclusion may not apply to you. This warranty gives you specified legal rights, and you may have other rights that vary from state to state or province.

For additional information regarding this warranty, or to place a warranty claim, contact the R. H. Peterson dealer where the product was purchased.

When contacting your Peterson dealer or the R. H. Peterson Co., please provide the following information:

- Your name, address, telephone number, e-mail
- Sales receipt showing where purchased and date purchased
- Model number, serial number of product, date code
- Relevant information: installer, additions, repairs, when defect was first noted

TO REGISTER YOUR PRODUCT ONLINE GO TO: WWW.RHPETERSON.COM, AND CLICK ON PRODUCT REGISTRATION. THANK YOU FOR YOUR PURCHASE.

COMMONWEALTH OF MASSACHUSETTS REQUIREMENTS

This appliance is approved for installation in the state of Massachusetts subject to the following requirements:
Install this appliance in accordance with 248 C.M.R., the Rules and Regulations Governing Plumbers and Gas Fitters. The installer or service agent must be a plumber or gas fitter licensed in the Commonwealth of Massachusetts. The flexible gas line connector used must not exceed 36 inches (92 centimeters) in length. The individual manual shut-off must be a T-handle type valve, listed and approved by the state of Massachusetts.

Quality Check

Date:_____

Burner Orifices	**Nat.**	**L.P.**	**Leak Test:**	_____	**Model#:**	_____
Main:	_____	_____	**Burn Test:**	_____	**Serial#:**	_____
Back:	_____	_____	**Gas Type:**	Nat. / L.P.	**Air Shutter:**	_____
Side/Power:	_____	_____			**Inspector:**	_____
Infrared:	_____	_____				
Other:	_____	_____				

Robert H. Peterson Co. • 14724 East Proctor Avenue • City of Industry, CA 91746