FIREMAGIC®

CHOICE

MULTI-USER SERIES

BUILT-IN OUTDOOR GAS GRILLS

CM430i, CM540i, and CM650i

INSTALLATION AND OWNER'S MANUAL

CM540i shown

INSTALLER: Leave these instructions with consumer.
CONSUMER: Retain for future reference.

IMPORTANT: READ THESE INSTRUCTIONS CAREFULLY BEFORE STARTING INSTALLATION OR USE.

WARNINGS AND SAFETY CODES

⚠ DANGER:

IF YOU SMELL GAS:

- Shut off gas to the appliance.
- Extinguish any open flame.
- Open lid.
- If odour continues, keep away from the appliance and immediately call your gas supplier or the fire department.

ONLY TO BE USED OUTDOORS

CODE AND SUPPLY REQUIREMENTS: Installation must conform with local codes or, in the absence of local codes, with either the *National Fuel Gas Code*, ANSI 2223.1/NFPA 54, or the *Natural Gas and Propane Installation Code*, CSA B149.1, or the *Propane Storage and Handling Code*, CSA B149.2, as applicable.

The outdoor cooking gas appliance and its individual shut-off valve must be disconnected from the gas supply piping system during any pressure testing of that system at test pressures in excess of 1/2 psi (3.5 kPa).

The outdoor cooking gas appliance must be isolated from the gas supply piping system by closing its individual manual shut-off valve during any pressure testing of the gas supply piping system at test pressures equal to or less than 1/2 psi (3.5 kPa).

Proper operation of your grill requires prompt and periodic maintenance. See the SERVICING AND CLEANING section for details.

⚠ WARNING:

- Do not store or use gasoline or other flammable liquids or vapours in the vicinity of this or any other appliance.
- An LP cylinder not connected for use shall not be stored in the vicinity of this or any other appliance.

⚠ WARNING:

Improper installation, adjustment, alteration, service, or maintenance can cause injury or property damage. For proper installation, refer to the installation instructions. For assistance or additional information, consult a qualified professional service technician, service agency, or the gas supplier.

This appliance is designed as an <u>attended appliance</u>. <u>DO NOT</u> leave this appliance burning when unattended.

If an external electrical source is utilized, the outdoor cooking gas appliance, when installed, must be electrically grounded in accordance with local codes or, in the absence of local codes, with the *National Electrical Code*, ANSI/NFPA 70, or the *Canadian Electrical Code*, Part I, CSA C22.1.

Keep any electrical supply cord and the fuel supply hose away from any heated surfaces.

Cooking Grid U.S. Patent Nos. D857,453 D862,984

PFS® C US

Certified to: ANSI Z21.58 CSA 1.6

FIREMAGIC

CHOICE

MULTI-USER SERIES

GRIL À GAZ EXTÉRIEUR INTÉGRÉ

C430i, C540i, et C650i

INSTALLATION ET LE MANUEL DU PROPRIÉTAIRE

INSTALLATEUR: laissez ces instructions au consommateur.
CONSOMMATEUR: À conserver pour référence future.

C540i illustré

IMPORTANT: LIRE ATTENTIVEMENT CES INSTRUCTIONS AVANT DE COMMENCER L'INSTALLATION OU L'UTILISATION.

AVERTISSEMENTS ET CODES DE SÉCURITÉ

⚠ DANGER:

SI VOUS SENTEZ DU GAZ:

- Coupez le gaz de l'appareil.
- Éteignez toute flamme nue.
- Ouvrez le couvercle.
- Si l'odeur persiste, éloignez-vous de l'appareil et appelez ***immédiatement*** votre fournisseur de gaz ou les pompiers.

À UTILISER UNIQUEMENT À L'EXTÉRIEUR

EXIGENCES EN MATIÈRE DE CODE ET D'APPROVISIONNEMENT: L'installation doit être conforme aux codes locaux ou, en l'absence de codes locaux, soit au *National Fuel Gas Code*, ANSI 2223.1/NFPA 54, soit au *Natural Gas and Propane Installation Code*, CSA B149.1, soit au *Code de stockage et de manipulation du propane*, CSA B149.2, selon le cas.

L'appareil de cuisson au gaz extérieur et son robinet d'arrêt individuel doivent être déconnectés du système de tuyauterie d'alimentation en gaz pendant tout essai de pression de ce système à des pressions d'essai supérieures à 1/2 psi (3,5 kPa).

L'appareil de cuisson au gaz extérieur doit être isolé du système de tuyauterie d'alimentation en gaz en fermant son robinet d'arrêt manuel individuel pendant tout test de pression du système de tuyauterie d'alimentation en gaz à des pressions d'essai égales ou inférieures à 1/2 psi (3,5 kPa).

Le bon fonctionnement de votre gril nécessite un entretien rapide et périodique. Voir la section ENTRETIEN ET NETTOYAGE pour plus de détails.

⚠ ATTENTION:

- N'entreposez pas et n'utilisez pas d'essence ou d'autres liquides ou vapeurs inflammables à proximité de cet appareil ou de tout autre appareil.
- Une bouteille de GPL non connectée pour utilisation ne doit pas être stockée à proximité de cet appareil ou de tout autre appareil.

⚠ ATTENTION:

Une installation, un réglage, une modification, un entretien ou une maintenance inappropriés peuvent causer des blessures ou des dommages matériels. Pour une installation correcte, reportez-vous aux instructions d'installation. Pour obtenir de l'aide ou des informations supplémentaires, consultez un technicien de service professionnel qualifié, une agence de service ou le fournisseur de gaz.

Cet appareil est conçu comme un <u>appareil surveillé</u>. <u>NE PAS</u> laisser cet appareil brûler sans surveillance.

Si une source électrique externe est utilisée, l'appareil à gaz de cuisson extérieur, lorsqu'il est installé, doit être mis à la terre conformément aux codes locaux ou, en l'absence de codes locaux, avec le *National Electrical Code*, ANSI/NFPA 70, ou le *Canadian Electrical Code*. Code, Partie I, CSA C22.1. Gardez tout cordon d'alimentation électrique et le tuyau d'alimentation en carburant à l'écart de toute surface chauffée.

Grille de cuisson US
Numéros de brevet
D857,453
D862,984

PFS® C US

Certifié à : ANSI Z21.58
CSA 1.6

CONTENTS

GETTING STARTED

AVERTISSEMENTS 4
INSTALLATION, OPERATION, AND SAFETY INFORMATION 5
GAS SAFETY INFORMATION 6
WARNING 6
WHEN USING PROPANE GAS 6
WHEN USING NATURAL GAS 6
INSTALLATION SAFETY GUIDELINES 6
OPERATING THE UNIT SAFELY AND CORRECTLY 6
SAFE USE & MAINTENANCE OF PROPANE GAS CYLINDERS 7
ENCLOSURE REQUIREMENTS 11
ENCLOSURE PARAMETERS 11
INSTALLATION REQUIREMENTS 17
OVERHEAD CONSTRUCTION AND EXHAUST HOOD REQUIREMENTS 17
REAR WALL CLEARANCES 18
BACKSPLASH CLEARANCE (if applicable) 18
CONTROL PANEL CLEARANCES 19
COMBUSTION AIR AND COOLING AIRFLOW 19
DIAGRAMMATICAL REPRESENTATIONS OF OUTDOOR AREAS 20
MODEL SPECIFICATIONS 21
CHOICE MULTI-USER GRILL REPLACEMENT PARTS LIST 22

INSTALLATION

INSTALLATION 24
BUILD / CONSTRUCT ENCLOSURE 24
INSTALL TIMER BOX 24
INSTALL INSULATING LINER (if applicable) 24
SLIDE UNIT INTO ENCLOSURE CUTOUT 24
LEAK TEST 26
INSTALL FLAVOR GRIDS 26
INSTALL COOKING GRIDS 26
SECURE COOKING GRIDS 27
LOCK CONTROL KNOBS 28
INSTALL DRIP TRAY 28
OPERATION TEST 28

USE, CARE, & SERVICE

IDENTIFICATION OF GRILL CONTROLS 29
USING THE GRILL 30
LIGHTING (IGNITION) INSTRUCTIONS 31
ELECTRONIC LIGHTING 31
SETTING THE TIMER 31
MANUAL LIGHTING 31
SHUTTING OFF THE UNIT 31
SERVICING AND CLEANING 33
CLEANING YOUR GRILL 33
CONTROL PANEL REMOVAL 35
COOKING GRID REMOVAL 36
BURNER REMOVAL 37
WARMING RACK REMOVAL 37
CONVERTING THE GAS TYPE 38
AIR SHUTTER ADJUSTMENT / BURNER FLAME INSPECTION 39
VALVE "LOW" SETTING ADJUSTMENT 40
TROUBLESHOOTING 41
WARRANTY 42
COMMONWEALTH OF MASSACHUSETTS REQUIREMENTS 42

⚠ AVERTISSEMENTS

Avertissements généraux :

- Cet appareil est destiné à une utilisation en extérieur uniquement. Si l'appareil est entreposé à l'intérieur, retirez les bouteilles et gardez-les à l'extérieur.
- Ne couvrez pas immédiatement l'appareil après utilisation. Laissez-le refroidir avant de le couvrir, de le déplacer ou de le ranger. Ne pas respecter cette mesure de sécurité pourrait entraîner un incendie causant des dommages matériels, des blessures ou la mort.
- Ne pas utiliser cet appareil sous une surface combustible.
- Ne pas utiliser cet appareil sous un auvent. Le non respect de cette mesure de sécurité pourrait entraîner un incendie ou des blessures.
- Distance minimale requise entre les parois latérales et arrière de l'appareil et toute construction combustible (45,7 cm à partir des parois latérales et 45,7 cm à partir de l'arrière). Veuillez consulter la section des distances de sécurité pour tous les détails.
- Un régulateur de pression de gaz doit être utilisé avec cet appareil de cuisson à gaz pour l'extérieur. Ce régulateur doit être réglé pour une pression de sortie de 5 pouces colonne d'eau pour le gaz naturel et de 10 pouces pour le propane. Veuillez consulter la liste des pièces de ce manuel du propriétaire pour vérifier si un régulateur est inclus avec votre appareil.
- LE RÉGULATEUR DOIT ÊTRE ÉVALUÉ POUR UN MAXIMUM DE 1/2 (LIVRES PAR POUCES CARRÉS). Veuillez consulter la liste des pièces de ce manuel du propriétaire pour vérifier si un régulateur est inclus avec votre appareil. SI VOTRE OFFRE DE GAZ EST SUPÉRIEURE DE 1/2 (LIVRES PAR POUCES CARRÉS), UN RÉGULATEUR ADDITIONNEL DOIT ÊTRE INSTALLÉ AVANT L'UTILISATION DE L'APPAREIL. VEUILLEZ CONSULTER LA SECTION DES CONDITIONS D'ALIMENTATION EN GAZ POUR LA PRESSION APPROPRIÉE DE L'ALIMENTATION EN GAZ.
- Ne couvrez jamais la surface entière de cuisine ou de gril de gauffreuses ou de casseroles. La surchauffe se produira et les brûleurs ne seront pas très performants quand la chaleur de combustion est emprisonnée au-dessous de la surface à cuire.
- Ne jamais pulvériser d'eau sur une unité de gaz chaude, car cela peut endommager les surfaces ou les composants.

Avertissements de propane :

- Une fuite de GPL peut causer une incendie ou une explosion si enflammée entraînant des blessures corporelles graves ou la mort.
- Communiquez avec le fournisseur de GPL pour les réparations ou pour disposer de qules bouteille ou du GPL non utilisé.

INSTALLATION, OPERATION, AND SAFETY INFORMATION

1. Wear gloves and use extreme caution whenever installing and handling this product and its accessories as certain components have sharp edges that can cause personal injury.
2. The outdoor appliance and surrounding area MUST remain clear of flammable substances such as gasoline, yard debris, wood, etc. Maintain a minimum horizontal clearance of 18" (in all directions) from combustible materials/items.
3. Do not block the 1" front air inlet along the bottom of the control panel. See the COMBUSTION AIR AND COOLING AIRFLOW section under INSTALLATION REQUIREMENTS for details.
4. **This unit must be installed so that the required vent openings and surrounding area of the enclosure remain clear and free at all times. See the ENCLOSURE REQUIREMENTS section for details.**
5. **When using propane gas: the propane cylinder, regulator, and rubber hose must be in a location not subject to temperatures above 125° F (51° C).**
6. Before each use, ensure the flames on each burner burn evenly along the entire burner with a steady flame (mostly blue). If burner flames are not normal, check and clean the orifice and burner/venturi tubes for insects and insect nests. A clogged tube can lead to a fire beneath the unit. A proper flame pattern will ensure safe operation and optimal performance. Adjust the air shutter as needed to achieve proper flame pattern (see AIR SHUTTER ADJUSTMENT/BURNER FLAME INSPECTION section, under SERVICING AND CLEANING for details).
7. The in-line gas valve or gas cylinder valve must always be shut OFF when the unit is not in use.
8. **Adults MUST be present when this gas appliance is operating. This appliance MUST NOT be left burning when unattended.**
9. **Do not store combustible materials in the enclosure directly beneath the appliance.**

⚠ WARNING

NEVER cover slots, holes, or passages in the oven bottom or cover an entire rack with material such as aluminum foil. Doing so blocks air flow through the oven and may cause carbon monoxide poisoning.

Aluminum foil linings may trap heat causing a fire hazard.

CAUTION: FOR YOUR SAFETY, you must provide openings in the enclosure for replacement air and ventilation (in case of possible leakage from gas connections or propane cylinders). Failure to do so may result in a fire or explosion causing property damage, bodily injury, or death. See the ENCLOSURE REQUIREMENTS section for details.

IMPORTANT: IN THE EVENT OF A GREASE FIRE, IMMEDIATELY SHUT OFF THE MAIN GAS VALVE TO THE UNIT. KEEP THE LID OPEN AND ALLOW THE FIRE TO EXTINGUISH ITSELF. KEEP AT A SAFE DISTANCE. A THOROUGH INSPECTION BY A QUALIFIED PROFESSIONAL SERVICE TECHNICIAN SHOULD BE CONDUCTED BEFORE FUTURE USE OF YOUR UNIT. THE SERVICE TECHNICIAN WILL CHECK THE SYSTEM FOR GAS LEAKS AND WILL CHECK ALL ELECTRICAL WIRING FOR DAMAGE. ALL GAS LEAKS AND WIRING MUST BE REPAIRED PRIOR TO FUTURE USE.

WARNING: NEVER cover more than 75% of the cooking or grill surface with griddles, pots, or pans. Overheating will occur, and burners will not perform properly when combustion heat is trapped below the cooking surface.

The unit serial number tag can be found affixed to the grill body behind the control panel (on an aluminum tag) and on the underside of the drip tray handle (on a thermal label). It is recommended that the drip tray first be removed and cleaned / emptied of its contents, then turned over to view. The unit rating label is located inside of the control panel.

GAS SAFETY INFORMATION

WHEN OPERATING THIS GAS APPLIANCE, ALL INSTRUCTIONS AND WARNINGS MUST BE OBSERVED. FAILURE TO DO SO MAY RESULT IN A FIRE OR EXPLOSION CAUSING PROPERTY DAMAGE, BODILY INJURY, OR DEATH.

WARNING

This gas appliance and its enclosure MUST be plumbed and vented in accordance with local building and safety codes and should be approved by local code enforcement officials. This appliance MUST be installed and operated according to the information below.

FAILURE TO PROPERLY VENT THE ENCLOSURE MAY RESULT IN A FIRE OR EXPLOSION CAUSING PROPERTY DAMAGE, BODILY INJURY, OR DEATH.

A leaking gas connection or valve unintentionally left open will create a hazard.

WHEN USING PROPANE GAS

- **Propane gas** (also known as **L.P. gas**) is heavier than air and will accumulate or pool in an inadequately vented enclosure or recessed area.
- If a pool of **propane gas** is ignited, an explosion will occur. Adequate venting at the floor level, or the lowest point where gas could accumulate, will eliminate this danger.

  Refer to the **ENCLOSURE REQUIREMENTS** section.
  Observe all local codes.
- DO NOT store a spare propane-gas cylinder under or near the enclosure.

WHEN USING NATURAL GAS

- **Natural gas** is lighter than air and will accumulate at the top of an inadequately vented enclosure.
- If an accumulation of **natural gas** is ignited, an explosion will occur. Adequate venting at the top of the enclosure, or the highest point where gas could accumulate, will eliminate this danger.

  Refer to the **ENCLOSURE REQUIREMENTS** section.
  Observe all local codes.

INSTALLATION SAFETY GUIDELINES

THIS UNIT MUST BE INSTALLED SO THAT THE REQUIRED VENT OPENINGS AND SURROUNDING AREA OF THE ENCLOSURE REMAIN CLEAR AND FREE AT ALL TIMES. See the ENCLOSURE REQUIREMENTS section for details.

CAUTION: FOR YOUR SAFETY, you must provide openings in the enclosure for replacement air and ventilation (in case of possible leakage from gas connections or propane cylinders). Failure to do so may result in a fire or explosion causing property damage, bodily injury, or death. See the ENCLOSURE REQUIREMENTS section for details.

The gas cylinder, regulator, and rubber hose must be in a location not subject to temperatures above 125° F (51° C).

IF A PROPANE CYLINDER IS INSTALLED INSIDE OF THE ENCLOSURE, THE GUIDELINES FOUND IN THE **ENCLOSURE REQUIREMENTS** SECTION MUST BE FOLLOWED.

OPERATING THE UNIT SAFELY AND CORRECTLY

Every time you use the unit, **make sure that:**

1. The area around the unit is clear and free from combustible materials, gasoline and flammable vapours and liquids.
2. There is no blockage of the airflow through the vent openings located on the enclosure.
3. The hose is inspected (if applicable). See SAFE USE & MAINTENANCE OF PROPANE-GAS CYLINDERS section.

DO NOT store any combustible materials, gasoline, and any other flammable vapours/liquids in the vicinity of the unit. Provide adequate clearance for servicing and operation.

SAFE USE & MAINTENANCE OF PROPANE GAS CYLINDERS

IMPORTANT FOR YOUR SAFETY
READ AND FOLLOW ALL WARNINGS PROVIDED WITH THE PROPANE-GAS CYLINDER.
When operating this appliance with a propane-gas cylinder, these instructions and warnings **MUST** be observed.
FAILURE TO DO SO MAY RESULT IN A SERIOUS FIRE OR EXPLOSION.

For requirements related to ventilation, L.P. Cylinders, and the enclosure, see the ENCLOSURE REQUIREMENTS section.

CYLINDER/CONNECTOR REQUIREMENTS

a. Propane-gas cylinders, valves, and hoses must be maintained in good condition and inspected before each use of appliance. They must be replaced if there is any visible damage. If hose is cut or shows excessive abrasion or wear, it must be replaced before using appliance (see **e**.).

b. This unit, when used with a cylinder, should be connected to a standard 5-gallon (20 lb.) propane-gas cylinder equipped with a listed overfilling prevention device. The device has been required on all cylinders sold since October 1,1998, to prevent overfilling.

c. Cylinder dimensions should be approximately 12" (30.5 cm) in diameter and 18" (45.7 cm) high. Cylinders must be constructed and marked in accordance with the U.S. Department of Transportation (D.O.T.) *Specifications for LP-Gas Cylinders,* or the Standard for *Cylinders, Spheres, and Tubes for Transportation of Dangerous Goods and Commission,* CAN/CSA-B339, as applicable.

d. The cylinder used must include a collar to protect the cylinder valve. The cylinder supply system must be arranged for vapour withdrawal. See Fig. 7-1.

e. When used with a cylinder, the gas supply system must be used with a pressure regulator. The pressure regulator and hose assembly **(not supplied)** used must match the specification for Type I by ANSI Z 21.58/CGA 1.6 and must comply with UL 144 as a part of the self-contained LP gas supply system (see Fig. 7-1).

f. The propane-gas cylinder valve must be equipped with a cylinder connection device, described as Type I in the standard defined in paragraph **e**. above. This device is commonly described as an Acme thread coupler.

g. If the cylinder comes with a dust plug, place it on the cylinder valve outlet whenever the cylinder is not in use. Only install the type of dust cap on the cylinder valve outlet that is provided with the cylinder valve. Other types of caps or plugs may result in leakage of propane.

COUPLER OPERATION

To connect the regulator/hose assembly to the propane-gas cylinder valve fitting: Press the hand nut on the regulator over the Acme thread fitting on the cylinder valve. Turn the hand nut clockwise to engage the threads and tighten until snug. The use of pliers or a wrench should not be necessary. Only cylinders marked “propane” may be used.

To disconnect: Turn the hand nut counterclockwise until detached (Fig. 7-1).

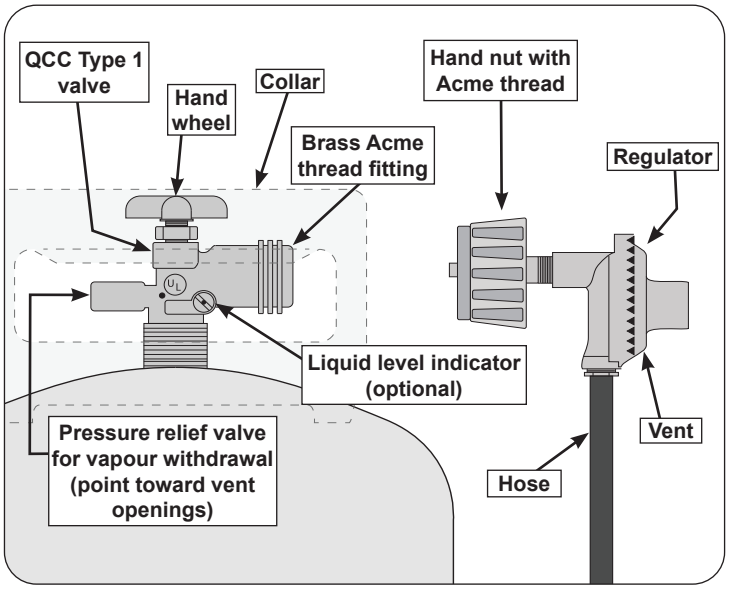

Fig. 7-1 Type I Acme thread coupler

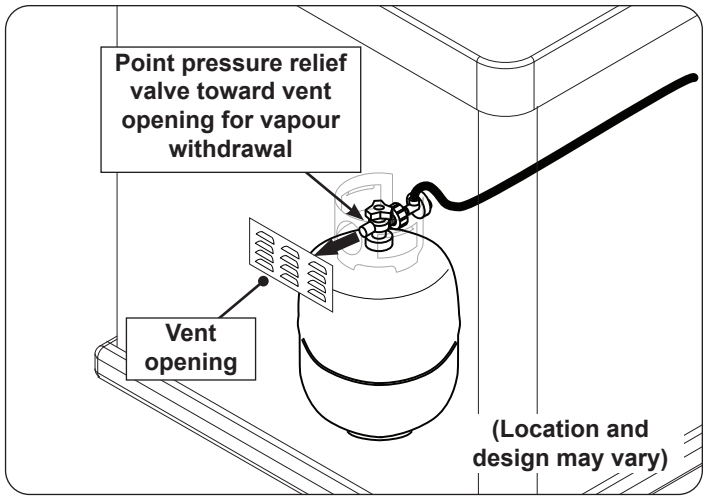

Fig. 7-2 Vapour withdrawal detail

UTILISATION SÛRE ET ENTRETIEN DES CYLINDRES DE GAZ DE PROPANE

IMPORTANT POUR VOTRE SÛRETÉ

LISEZ ET SUIVEZ TOUS LES AVERTISSEMENTS ÉQUIPÉS DE VOTRE CYLINDRE DE GAZ DE PROPANE.

En actionnant cet appareil avec un cylindre de gaz de propane ON DOIT observer ces instructions et avertissements.

LE MANQUE DE FAIRE AINSI PEUT AVOIR COMME CONSÉQUENCE UNE INCENDIE OU UNE EXPLOSION SÉRIEUSE.

Pour les exigences relatives à la ventilation, aux bouteilles de GPL et à l'enceinte, reportez-vous à la section ENCLOSURE REQUIREMENTS.

CYLINDRE ET CONDITIONS ET CARACTÉRISTIQUES DE CONNECTEUR

a. Les bouteilles, les vannes et les tuyaux de propane doivent être entretenus et inspectés avant chaque utilisation. Ils doivent être remplacés en cas de dommages visibles. Si le tuyau est coupé ou présente des signes d'abrasion ou d'usure, il doit être remplacé avant utilisation (**voir e.**).

b. Cette unité, lorsqu'elle est utilisée avec une bouteille, doit être connectée à une bouteille standard de gaz propane de 5 gallons (20 lb) équipée d'un dispositif anti-débordement répertorié. L'appareil est obligatoire sur toutes les bouteilles vendues depuis le 1er octobre 1998 afin d'empêcher tout remplissage excessif.

c. Les dimensions du cylindre doivent être d'environ 12 " (30,5 cm) de diamètre et 18" (45,7 cm) de hauteur. Les bouteilles doivent être construites et marquées conformément aux spécifications du ministère des Transports (DOT) pour les bouteilles à gaz LP ou à la norme relative aux bouteilles, sphères et tubes pour le transport des marchandises dangereuses et à la Commission, CAN / CSA-B339, selon le cas.

d. La bouteille utilisée doit comporter un collier pour protéger le robinet de la bouteille. Le système d'alimentation de la bouteille doit être conçu pour le retrait de la vapeur. Voir Fig. 8-1.

e. Lorsqu'il est utilisé avec une bouteille, le système d'alimentation en gaz doit être utilisé avec un régulateur de pression. Le régulateur de pression et l'ensemble de tuyau **(non fourni)** utilisés doivent correspondre à la spécification de type I par ANSI Z 21.58/CGA 1.6 et doivent être conformes à UL 144 en tant que partie du système d'alimentation en gaz propane autonome (voir Fig. 8-1).

f. La valve de cylindre de gaz de propane doit être équipée d'un dispositif d'accouplement de raccordement de cylindre, décrit comme type I dans la norme définie dans le e. de paragraphe ci-dessus. Ce dispositif est généralement décrit comme coupleur de fil de point culminant.

g. Si la bouteille est livrée avec un bouchon anti-poussière, placez-le sur la sortie du robinet de la bouteille chaque fois que la bouteille n'est pas utilisée. Installez uniquement le type de capuchon anti-poussière sur la sortie du robinet de la bouteille qui est fourni avec le robinet de la bouteille. D'autres types de bouchons ou de bouchons peuvent entraîner des fuites de propane.

OPÉRATION DE COUPLEUR

Pour relier le regulator/hose à l'ajustage de précision de valve de cylindre de gaz de propane: Serrez l'écrou de main sur le régulateur au-dessus de l'ajustage de précision de fil de point culminant sur la valve de cylindre. Tournez l'écrou de main dans le sens des aiguilles d'une montre pour engager les fils et pour serrer jusqu'à ce que douillettement. L'utilisation des pinces ou de la clé ne devrait pas être nécessaire. Seulement le "propane" marqué par cylindres doit être employé.

Pour déconnecter: tournez l'écrou à main dans le sens antihoraire jusqu'à ce qu'il soit détaché (Fig. 8-1)

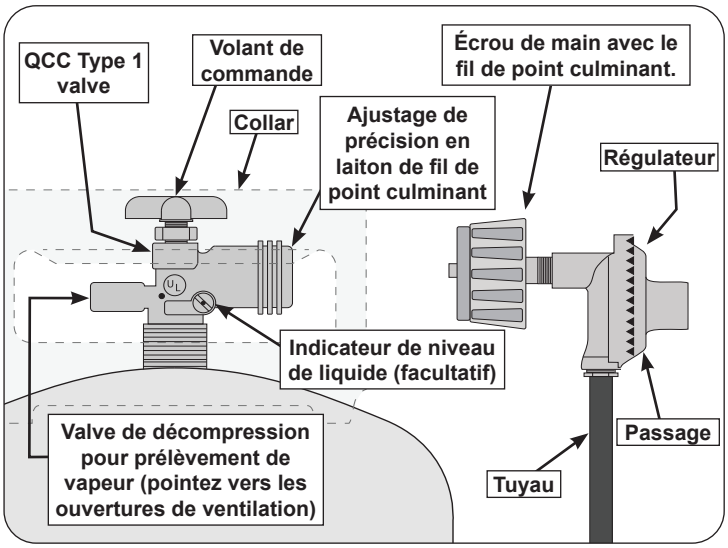

Fig. 8-1 Type coupleur de fil de point culminant d'I

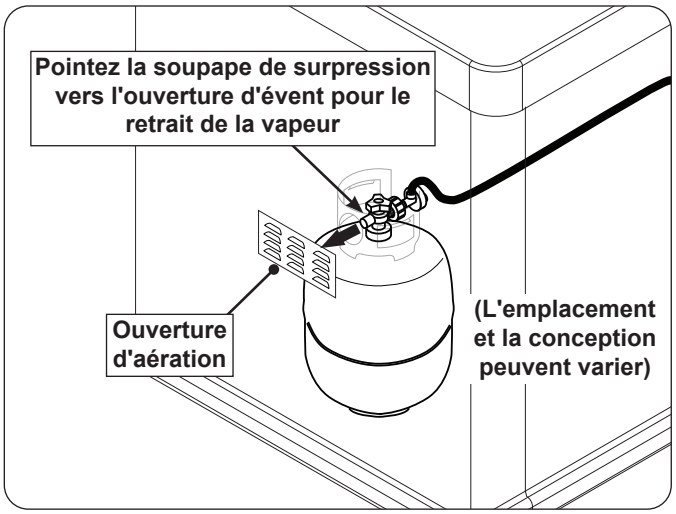

Fig. 8-2 Détail du retrait de vapeur

Important: Before using the unit, and after each time the cylinder is removed and reattached, check the hose for wear (see **a**.) and check all connections for leaks. Turn off the unit valves and open the main cylinder valve, then check connections with soapy water. Repair any leaks before lighting the unit.

CAUTION: Always turn the propane cylinder main valve off after each use, and before moving the unit and cylinder or disconnecting the coupling. This valve must remain closed and the cylinder disconnected while the appliance is not in use, even though the gas flow is stopped by a safety feature when the coupler is disconnected.

Carefully inspect the hose assembly each time before the gas is turned on. A cracked or frayed hose must be replaced immediately.

If the appliance is stored indoors, the cylinder must be disconnected and removed. Disconnected cylinders must be stored outdoors, out of the reach of children, with threaded valve plugs tightly installed, and must not be stored in a building, garage, or any other enclosed area.

FOR YOUR SAFETY

A. DO NOT store a spare propane-gas cylinder under or near this appliance.

B. NEVER fill the cylinder beyond 80-percent full.

C. IF THE INFORMATION IN **a.** AND **b.** IS NOT FOLLOWED EXACTLY, A FIRE CAUSING DEATH OR SERIOUS INJURY MAY OCCUR.

D. **CGA 791 connections on LP gas cylinders:** The cylinder face elastomeric face seal element on these devices could, over time, show marked and visible damage or deterioration that might cause a leak even with the connection tightened. A visual inspection for the seal must be carried out every time a LP gas cylinder is replaced or refilled. Any LP gas cylinder showing signs of damage or deterioration as illustrated in Fig. 9-1, including visible cracks and pitting, must be replaced.

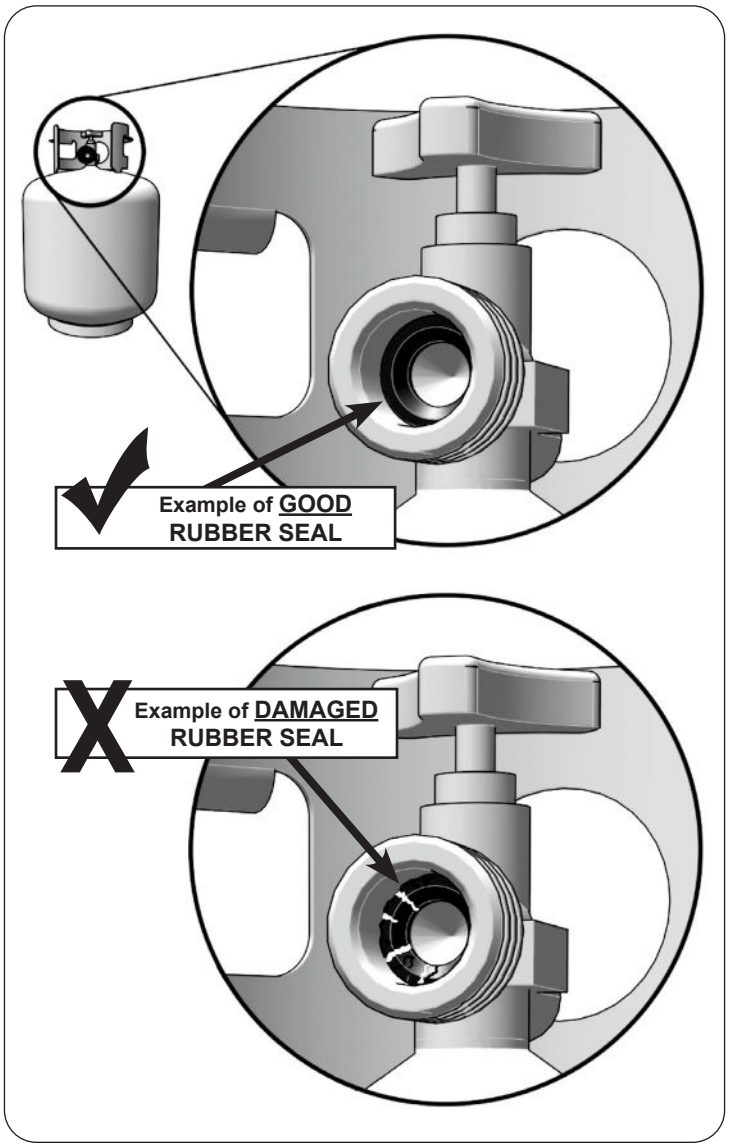

Fig. 9-1 Inspect rubber seal

Important: Avant d'employer le unité, et ensuite chaque fois que le cylindre est enlevé et rattaché, examinez tous les raccordements pour déceler les fuites. Arrêtez les valves de unité et ouvrez la valve principale de cylindre, puis vérifiez les raccordements avec de l'eau savonneux. Réparez toutes les fuites avant d'allumer le unité.

ATTENTION: Tournez toujours la valve principale de cylindre de propane au loin après chaque utilisation, et avant de déplacer le unité et le cylindre, ou débrancher l'accouplement. Cette valve doit rester fermée et le cylindre a débranché alors que l'appareil n'est pas en service, quoique l'écoulement de gaz soit arrêté par un dispositif de sûreté quand le coupleur est débranché.

Inspectez soigneusement l'ensemble de tuyau chaque fois avant que le gaz soit allumé. Un tuyau fissuré ou effiloché doit être immédiatement remplacé.

Si l'appareil est stocké à l'intérieur, le cylindre doit être disconnected et a enlevé. Des cylindres Disconnected doivent être stockés dehors, hors de la portée des enfants, avec les prises de valve filetées étroitement installées, et ne doivent pas être stockés dans un bâtiment, le garage, ou n'importe quel autre secteur inclus.

POUR VOTRE SÛRETÉ

a. Ne stockez pas un cylindre de gaz disponible de propane dessous ou ne vous approchez pas de cet appareil.

b. Ne remplissez jamais cylindre au delà de 80 pour cent de plein.

c. SI L'INFORMATION DANS "A" ET "B" N'EST PAS SUIVIE EXACTEMENT, UN FEU CAUSANT LA MORT OU DES DOMMAGES SÉRIEUX PEUT SE PRODUIRE.

d. **Connexions CGA 791 sur les bouteilles de GPL :** l'élément d'étanchéité en élastomère de la face de la bouteille de ces appareils peut, au fil du temps, présenter des dommages ou une détérioration marqués et visibles susceptibles de provoquer une fuite même avec la connexion serrée. Une inspection visuelle du joint doit être effectuée chaque fois qu'une bouteille de GPL est remplacée ou remplie. Toute bouteille de GPL présentant des signes de dommages ou de détérioration, tel qu'illustré à la Fig. 10-1, y compris des fissures et des piqûres visibles, doit être remplacée.

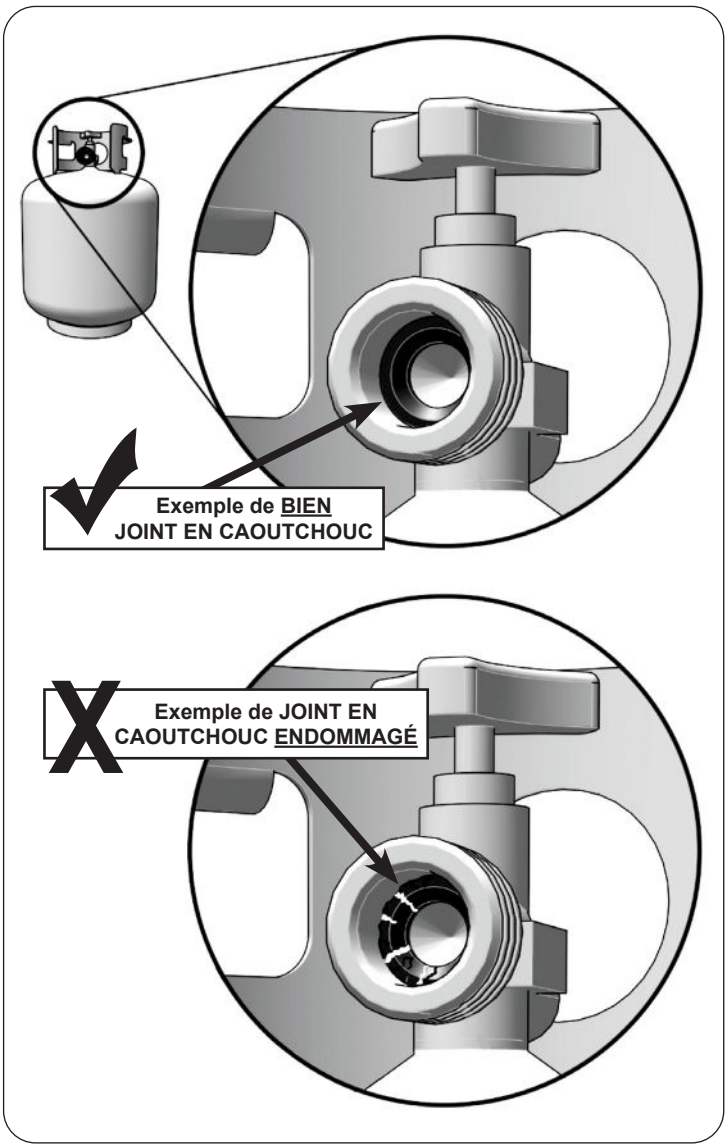

Fig. 10-1 Inspecter le joint en caoutchouc

ENCLOSURE REQUIREMENTS

GFRC islands are available (for select models). They meet all enclosure and ventilation requirements. Contact your local dealer. For requirements regarding custom-built enclosures, see below.

To ensure proper operation and safety, the enclosure MUST comply with the following:

- Proper construction and cutout openings - see INSTALLATION REQUIREMENTS and ENCLOSURE PARAMETERS sections.
- Proper ventilation - see VENTILATION section.
- Proper clearances - see INSTALLATION REQUIREMENTS section.

You MUST read and follow these sections for complete enclosure requirement details.

ENCLOSURE PARAMETERS

General Guidelines

The enclosure can be constructed according to your individual preference, while following all guidelines found in this manual. **The enclosure MUST (see Fig. 11-1):**

- be installed on a hard and level surface
- be properly vented (see VENTILATION section)
- have a countertop that is non-combustible (enclosure may be combustible construction with proper provision*)
- have the minimum dimensions specified in Fig. 11-1
- have the minimum cutout dimensions (see CUTOUT DIMENSIONS section)
- have access to the interior for ease of installation and service
- be setup so the unit is as close to the vent openings as possible
- be designed so that the grill is supported by the stainless-steel hanger extending from the upper portion of the unit (rests on left, right, and back of the countertop cutout), and the two front support adjustment bolts located below the control panel (left and right sides) - see INSTALLATION section
- have drainage cutouts (if needed) to prevent the accumulation of water within the enclosure
- meet all requirements found in Fig. 11-1 and the following sections

*** When installing this unit in a combustible enclosure, an approved insulating liner MUST be used. Reference Table 3 in the MODEL SPECIFICATIONS section for liner model #.**

When an L.P. cylinder is used in the enclosure, additional requirements exist, see the L.P. CYLINDER REQUIREMENTS section.

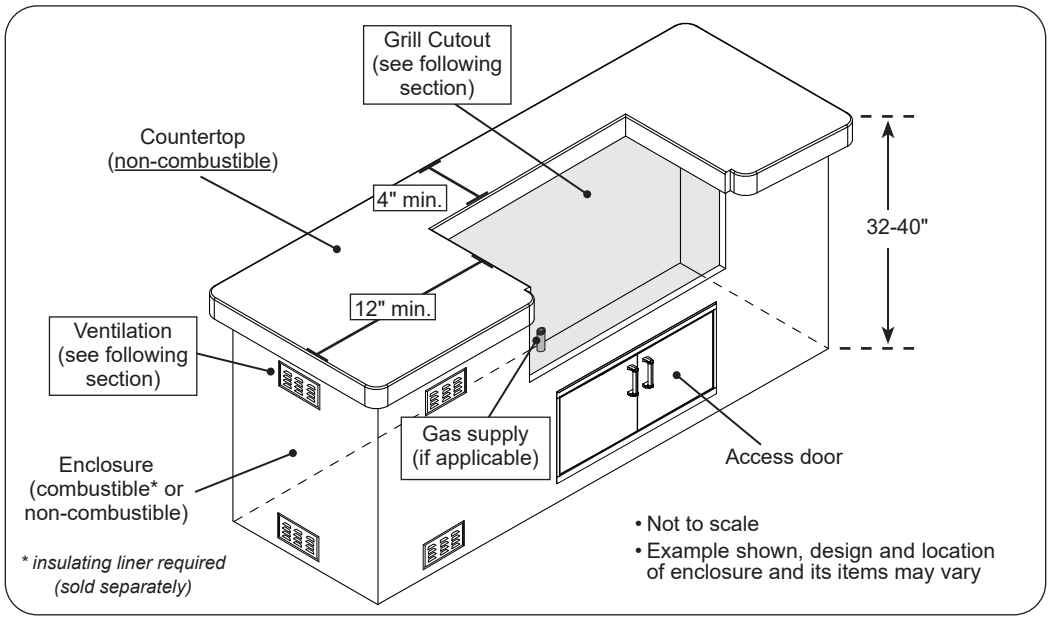

Fig. 11-1 Enclosure specifications

Ventilation

FOR YOUR SAFETY, you must provide the openings specific to your gas type for replacement air and ventilation of the enclosure (in case of possible leakage from gas connections and L.P. cylinders as applicable, and for heat dissipation). See the following sections for ventilation requirements specific to your gas type. Failure to provide proper ventilation for your gas type may result in a fire or explosion causing property damage, bodily injury, or death.

WARNING: Vent openings in side walls shall not communicate directly with other enclosures of the outdoor cooking gas appliance (see Fig. 12-1).

- **Ventilation openings shall not be located in front of the appliance above floor level.**
- **Every opening shall have a minimum dimension so as to permit the entrance of a 3/16" (4.8 mm) rod.**
- **The openings must remain unobstructed:**

  The clearance between the openings and any items outside of the enclosure is a minimum of 6". The clearance between the openings and any items within the enclosure is a minimum of 2". See Fig. 12-2.

KEEP THE REQUIRED VENT OPENINGS AND SURROUNDING AREA OF THE ENCLOSURE CLEAR AND FREE AT ALL TIMES.

Natural Gas Ventilation Requirements

When natural gas is used in the enclosure, the guidelines below MUST be followed:

One side of the enclosure shall be left completely open to the outside; OR 1 minimum vent opening (at top level) or 2 vent openings (1 at top and 1 at floor level) MUST be created (reference Fig. 12-3):

- **When using only 1 vent opening: the opening must be at top level and must have a minimum of 20 sq. in. of free area.**
- **When using 2 vent openings: The top and floor level openings must have a minimum of 10 sq. in. of free area each. The openings must be equally sized (ventilation total of 20 sq. in. free area).**
- The opening **at the top level** must begin 1" or less below the countertop level and end no more than 5" below the countertop level.
- If applicable, the opening **at the floor level** must begin 1" or less above the floor level and end no more than 5" above the floor level.
- If planning for 2 vent openings, it is acceptable to use RHP venting panels (PN 5510-01). Contact your dealer.

Note: These same requirements apply when multiple appliances exist in the enclosure.

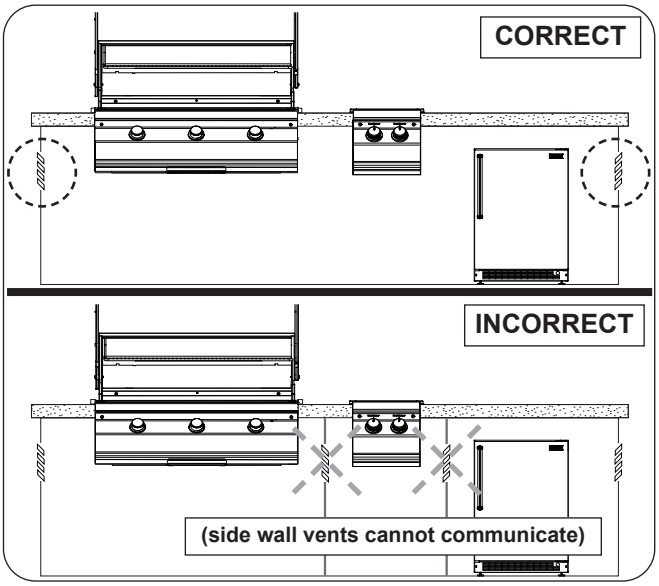

Fig. 12-1 Correct / Incorrect side wall venting

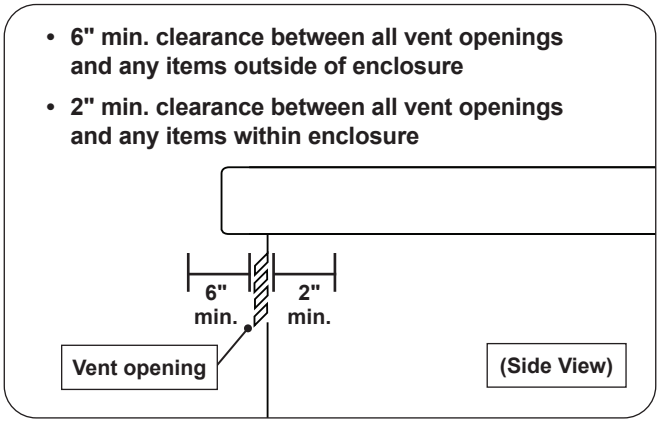

Fig. 12-2 Vent openings clearance

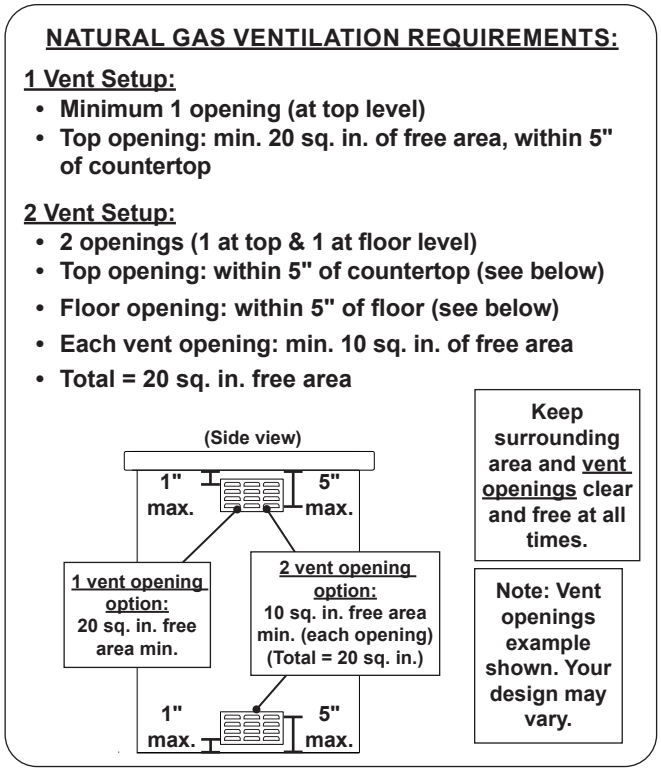

Fig. 12-3 Natural gas ventilation detail

L.P. Cylinder Ventilation Requirements

When an L.P. cylinder is used in the enclosure, the guidelines below MUST be followed:

One side of the enclosure shall be left completely open to the outside; OR 4 minimum vent openings (2 at top and 2 at floor level) MUST be created (reference Fig. 13-1):

- **Each opening at the top level must have a minimum of 10 sq. in. of free area. The openings must be equally sized.**
- **Each opening at the floor level must have a minimum of 5 sq. in. of free area. The openings must be equally sized.**
- **Ventilation total of 30 sq. in. free area**
- Each opening **at the top level** must be on adjacent walls of the enclosure, and spaced at a minimum of 90 degrees. The openings must begin 1" or less below the countertop level and end no more than 5" below the countertop level.
- Each opening **at the floor level** must be on adjacent walls of the enclosure, and spaced at a minimum of 90 degrees. The openings must begin 1" or less above the floor level and end no more than 5" above the floor level.
- **Additional requirements exist for L.P. cylinders, see the L.P. CYLINDER REQUIREMENTS section.**

Note: These same requirements apply when multiple appliances exist in the enclosure.

L.P. CYLINDER VENTILATION REQUIREMENTS:

- **Minimum 4 openings (2 at top & 2 at floor level)**
- **2 per adjacent wall - spaced at min. 90 degrees**
- **Top openings: min. 10 sq. in. of free area each, within 5" of countertop (20 sq. in. top ventilation)**
- **Floor openings: min. 5 sq. in. of free area each, within 5" of floor (10 sq. in. floor ventilation)**
- **Total = 30 sq. in. free area**

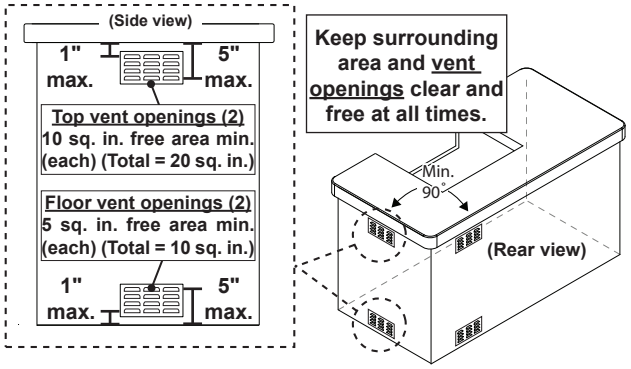

Note: Vent openings example shown. Your design may vary.

Fig. 13-1 L.P. cylinder ventilation detail

Remote L.P. Ventilation Requirements

When a remote L.P. gas system is used with the enclosure, the guidelines below MUST be followed:

One side of the enclosure shall be left completely open to the outside; OR 4 minimum vent openings (2 at top and 2 at floor level) MUST be created (reference Fig. 13-2):

- **Each opening must have a minimum of 45 sq. in. of free area. The openings must be equally sized.**
- **Ventilation total of 180 sq. in. free area**
- Each opening **at the top level** must be on adjacent side walls of the enclosure, and spaced at a minimum of 90 degrees. The openings must begin 1" or less below the countertop level and end no more than 5" below the countertop level.
- Each opening **at the floor level** must be on adjacent walls of the enclosure, and spaced at a minimum of 90 degrees. The openings must begin 1" or less above the floor level and end no more than 5" above the floor level.

Note: These same requirements apply when multiple appliances exist in the enclosure.

REMOTE LP VENTILATION REQUIREMENTS:

- **Minimum 4 openings (2 at top & 2 at floor level)**
- **2 per adjacent wall - spaced at min. 90 degrees**
- **Top openings: within 5" of countertop (see below)**
- **Floor openings: within 5" of floor (see below)**
- **Each vent opening: min. 45 sq. in. of free area**
- **Total = 180 sq. in. free area**

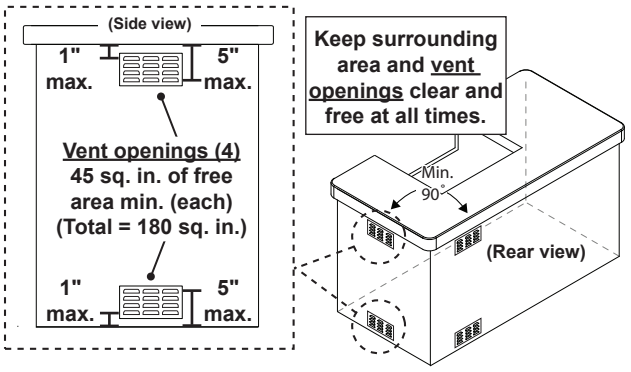

Note: Vent openings example shown. Your design may vary.

Fig. 13-2 Remote LP ventilation detail

L.P. Cylinder Requirements (if applicable)

When a propane (L.P.) cylinder is installed inside of the enclosure, the additional guidelines below **MUST** be followed. FAILURE TO DO SO MAY CAUSE DAMAGE TO YOUR UNIT AND/OR PERSONAL INJURY. Refer to Fig. 14-1 and 14-2.

- Only a C.S.A. listed stainless-steel flex connector must be connected to the unit.
- The regulator/hose assembly coming from the cylinder must only be connected to the above mentioned flex connector. A 1/2" male-to-male flare adapter will be required (not included). **DO NOT connect the regulator/hose assembly directly to the unit.**
- A non-combustible heat shield must be installed to protect the regulator/hose assembly and cylinder valve.
- The cylinder must be properly secured, and rest at least 2" above the ground.
- An additional vent opening is recommended in the access door near the cylinder and at the gas connection level (minimum 10 sq. in. of free area).
- The pressure relief valve on the cylinder must be pointed toward the vent opening for vapour withdrawal.

An "access door with tank tray and louvers" is available. It includes a heat shield that rests directly above the L.P. cylinder, a tray, a retention device, and louvers to meet the cylinder install requirements. The door is shown in Fig. 14-3. Contact your dealer for ordering information.

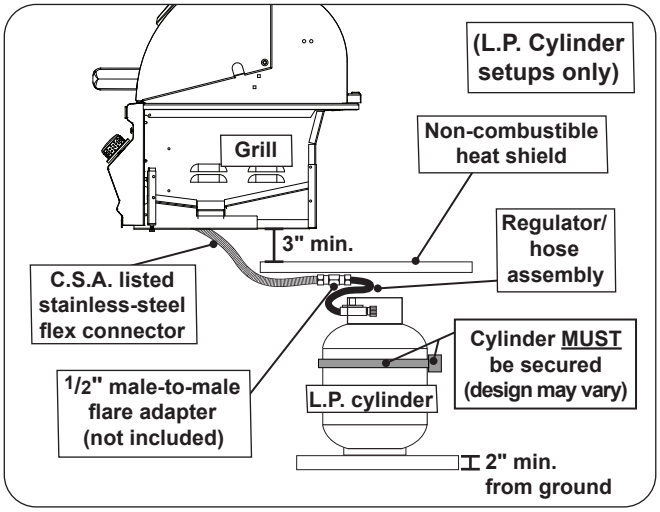

Fig. 14-1 L.P cylinder orientation (if applicable)

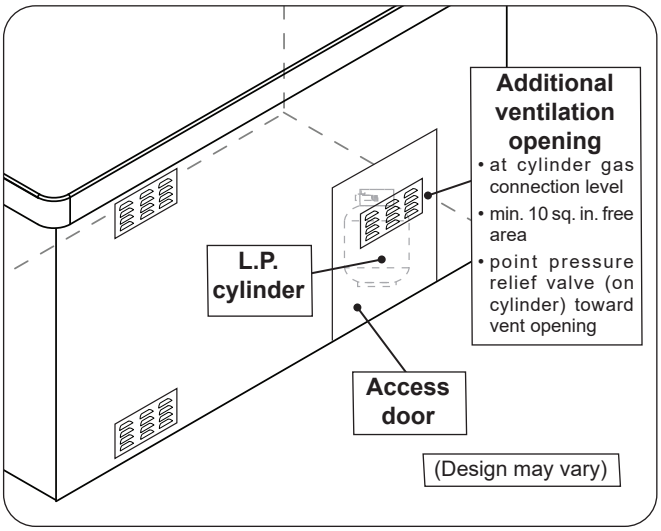

Fig. 14-2 Additional vent opening for L.P. cylinder

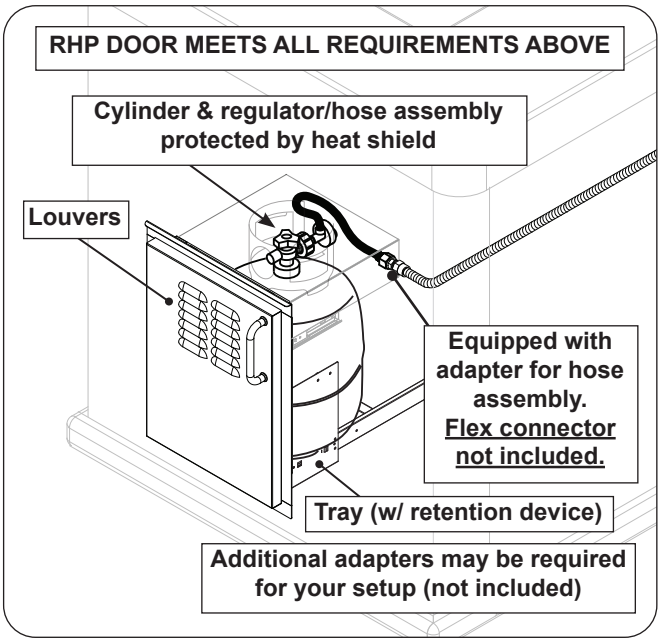

Fig. 14-3 Optional door w/ tank tray & louvers

Cutout Dimensions

Important: These cutout dimensions below are for non-combustible enclosures. If installing this grill in a combustible enclosure, the correct insulating liner must be used (and the cutout dimensions will differ). See Table 3. Refer to the instructions supplied with the liner for the correct cutout dimensions.

Description (non-combustible cutouts)	CM430i	CM540i	CM650i
A Countertop to unit bottom **cutout**	11 1/2"	11 1/2"	11 1/2"
B Side to side non-combustible **cutout**	25 1/2"	32"	37 3/4"
C Front to back non-combustible **cutout** *	19 1/2"	19 1/2"	19 1/2"
D Control panel width non-combustible **cutout** †	26 1/2"	33"	38 3/4"

* Includes any substrate at front wall of enclosure (in the area the rear of the control panel is to sit flush against). See SUBSTRATE section on next page.
† Only applicable for non-combustible enclosures that have countertops with an overhang (see illustration and section below).

Table 1 - Cutout Dimensions (for non-combustible enclosures)

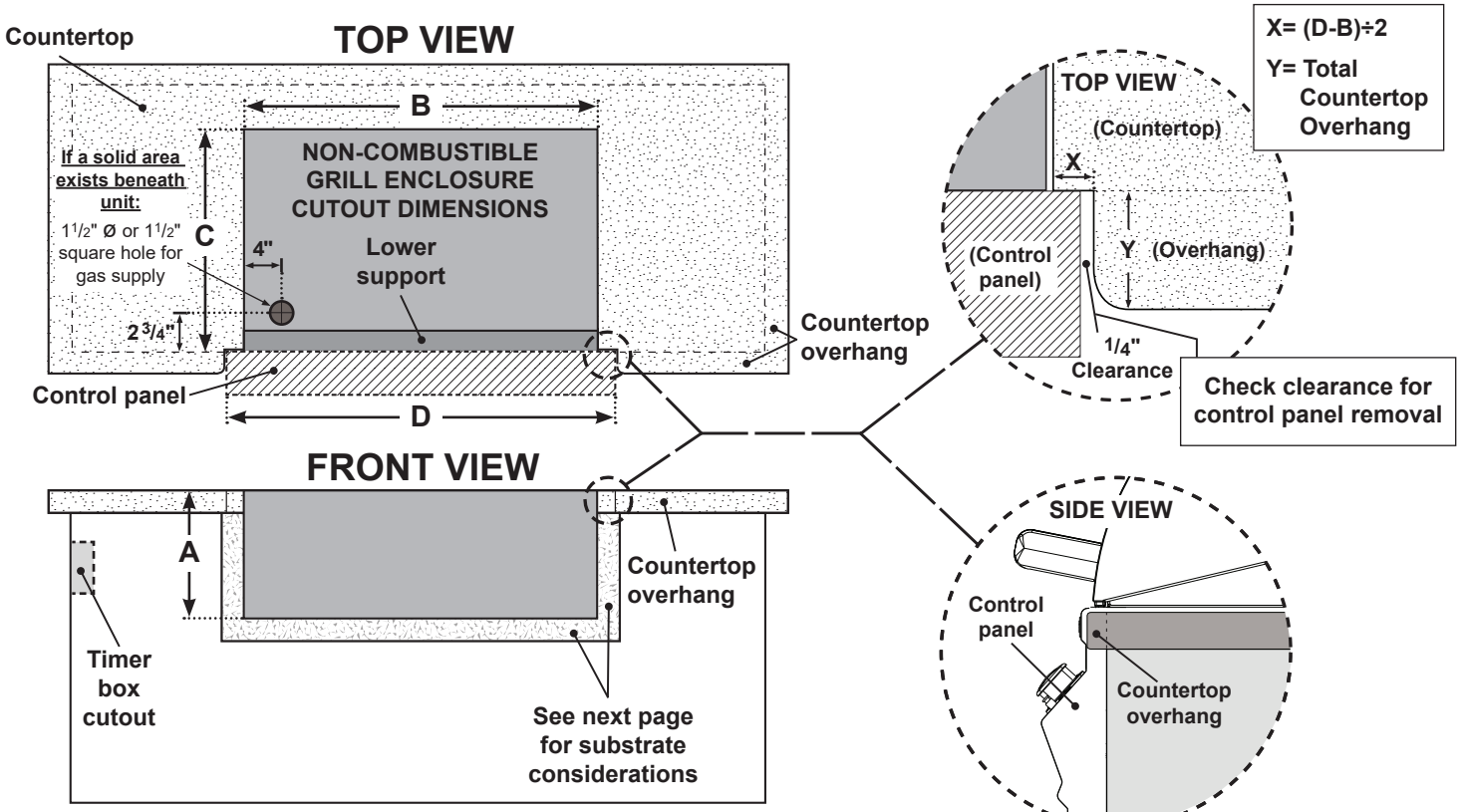

Fig. 15-1 Cutout Dimensions Detail

Timer Box

Reference the instruction manual included with your timer box for all cutout / installation details.

Countertop Overhang

The control panel is designed to sit flush against the enclosure front wall. If the countertop extends beyond the front wall, creating a countertop overhang, it must be cut flush with the front wall for the width of the control panel or a gap will be created exposing the forward portions of the left and right side grill fire walls. See illustrations in Fig. 15-1 above for the correct setup, and Fig. 15-2 for an incorrect setup.

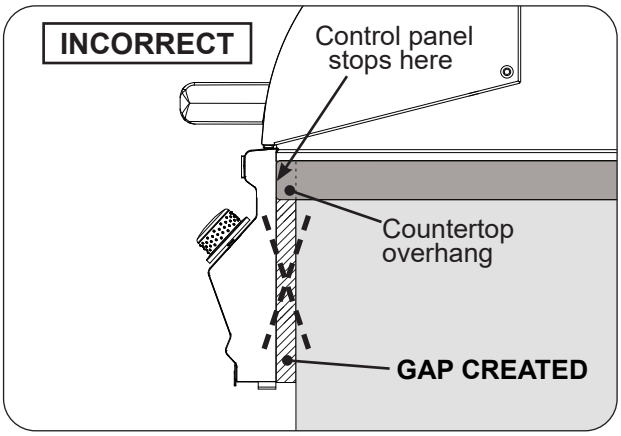

Fig. 15-2

Substrate

When adding any substrate to the enclosure front wall (including tiles, stone, etc.), consider the following:

Substrate Behind Control Panel

Substrate + countertop "front to back" cutout must equate to **Dim. C** (see previous page) when the substrate sits flush behind the control panel.

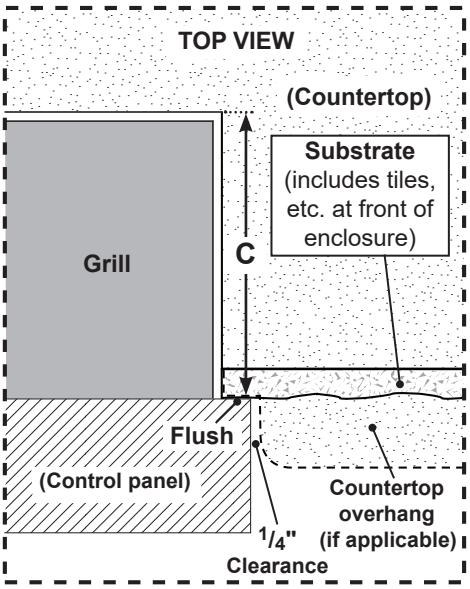

Fig. 16-1

Substrate Alongside Control Panel

Any additional substrate alongside the control panel does not need to be considered in **Dim. C** (see previous page), however a 1/4" clearance on each side (same as overhang) and below is required.

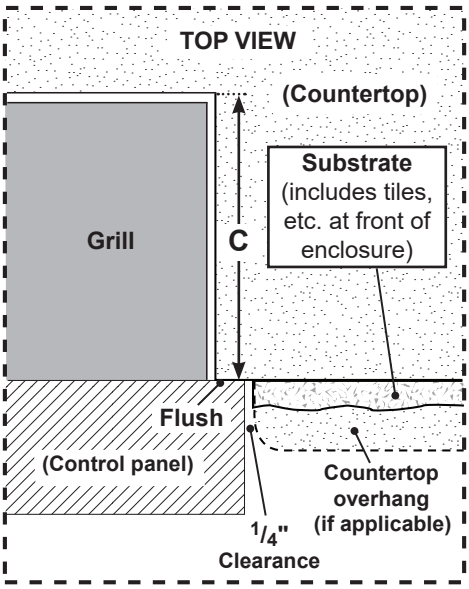

Fig. 16-2

Installation must be performed by a qualified professional service technician.

This unit is designed for outdoor use only. **DO NOT** use this unit inside a building, garage, or enclosed area. **DO NOT** install this unit in or on a recreational vehicle or boat.

Any constructed outdoor area in which the appliance is used shall comply with one of the following:

- An outdoor area with walls on three sides, and no overhead cover
- Within a partial outdoor area that includes an overhead cover and no more than two walls. The sidewalls may be parallel, as in a breezeway, or at right angles to each other
- Within a partial outdoor area that includes an overhead cover with walls on three sides, and at least 30% or more of the horizontal periphery of the enclosure that is open and unrestricted

Note: All openings must be permanently open.

Note: Sliding doors, garage doors, windows, or screened openings are not considered as permanent openings.

Refer to DIAGRAMMATICAL REPRESENTATIONS OF OUTDOOR AREAS section.

OVERHEAD CONSTRUCTION AND EXHAUST HOOD REQUIREMENTS

When installed under combustible overhead construction, the area above the cooking surface of the unit **must** be covered with an exhaust hood. The exhaust hood provides the protection for the combustible overhead construction. See exhaust hood information below and Fig. 17-1.

Important: DO NOT use this appliance under unprotected combustible overhead construction.

When installed under overhead non-combustible construction, an exhaust hood is highly recommended; see exhaust hood information below and Fig. 17-1.

Exhaust Hood

When using an exhaust hood, the area above the cooking surface of the grill must be covered with a hood larger than the cooking area of the grill, and with a minimum of 1200 CFM (cubic feet per minute) rated exhaust fan for proper outdoor application.

Fire Magic vent hoods, spacers, and duct covers are available. They meet all requirements. See Table 3. Contact your local dealer.

- For custom spacers, they **must be constructed entirely of non-combustible material only.**
- For custom soffits, they may be constructed of wood, metal framing, etc.

Clearances

A minimum 5 foot clearance is required between the countertop and the overhead construction. (No combustible materials are allowed within this area.)

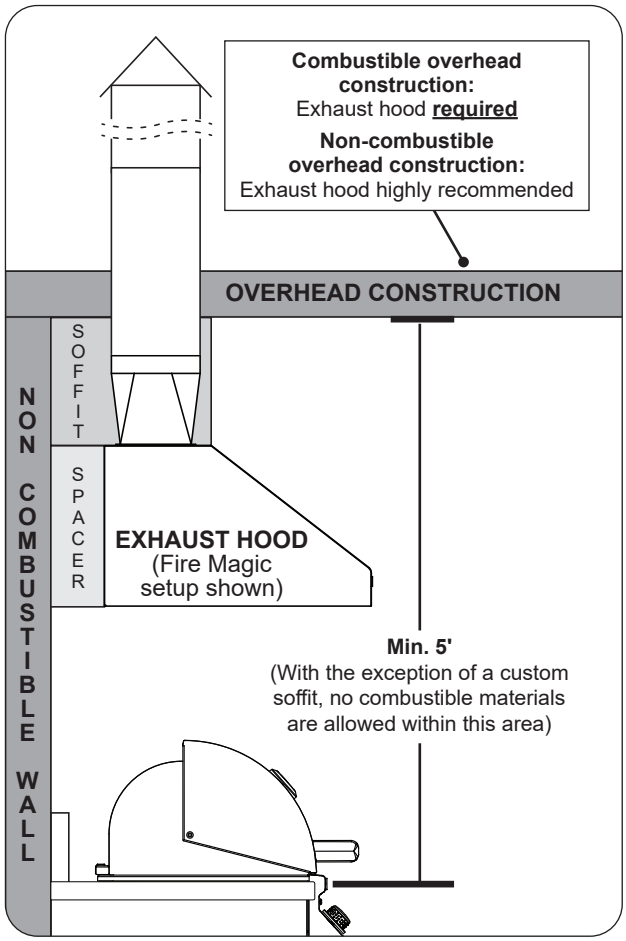

Fig. 17-1 Overhead requirements

REAR WALL CLEARANCES

For the minimum clearances between the unit and rear walls, your setup must fall within one (or more) of the following:

A. Clearance between unit and strictly non-combustible rear wall

(i.e. brick wall, see Fig. 18-1)

- The unit must have a minimum clearance of 4" from the non-combustible rear wall.

  (To allow for proper ventilation and prevent dangerous overheating.)

B. Clearance between unit and a protected combustible rear wall

(i.e. a non-combustible wall in front of a combustible wall to serve as a barrier. This can be accomplished by brick, or a metal stud finished with non-combustible substrate, see Fig. 18-2)

- The unit must have a minimum clearance of 14" from the protected combustible rear wall.

  (The 4" non-combustible material plus an additional 10" clearance between the unit and protected rear wall.)

C. Clearance between unit and combustible rear wall

- The unit must have a minimum clearance of 18" from the combustible rear wall (see Fig. 18-3).

BACKSPLASH CLEARANCE (if applicable)

If a non-combustible backsplash exists, it must have a minimum of a 4" clearance from the rear of the unit (to allow for proper ventilation and prevent dangerous overheating). See Fig. 18-4.

Important: This 4" backsplash clearance must first be met prior to any non-combustible walls beginning behind it.

SIDE / CORNER WALL CLEARANCES (if applicable)

The unit must have a minimum clearance of 24" from any side walls (to account for variables in airflow that could affect performance). See Fig. 18-5.

Clearances continued on following page

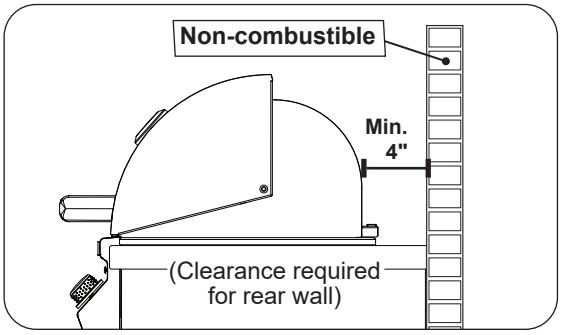

Fig. 18-1 Clearance **'A'** Diagram

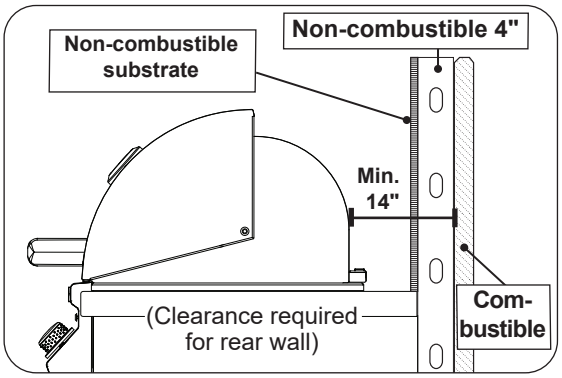

Fig. 18-2 Clearance **'B'** Diagram

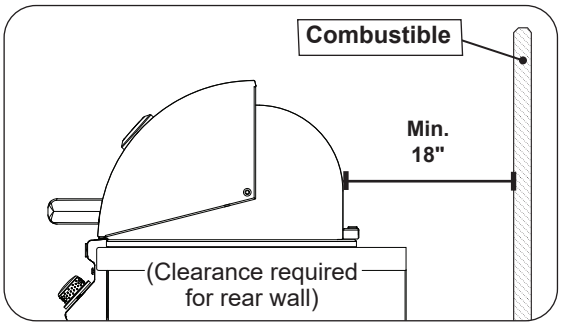

Fig. 18-3 Clearance **'C'** Diagram

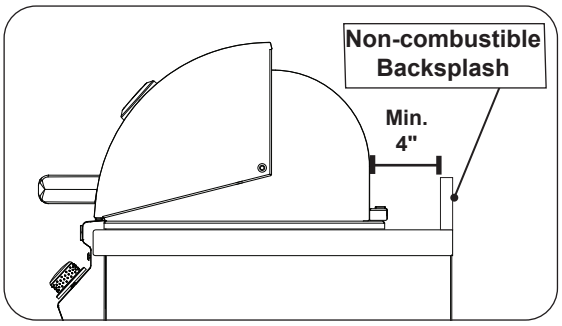

Fig. 18-4 Backsplash clearance

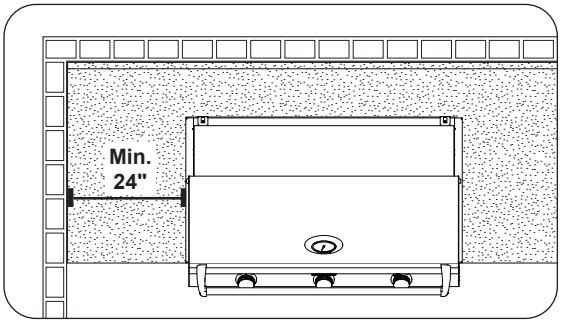

Fig. 18-5 Side/corner wall clearance

CONTROL PANEL CLEARANCES

- The control panel **MUST** have a minimum side clearance of 6" from any obstructions/side walls. See Fig. 19-1.

  (To allow for control panel removal.)
- The control panel **MUST** remain removable for servicing (see CONTROL PANEL REMOVAL section). Any adjacent countertops must not obstruct the panel from being removed.

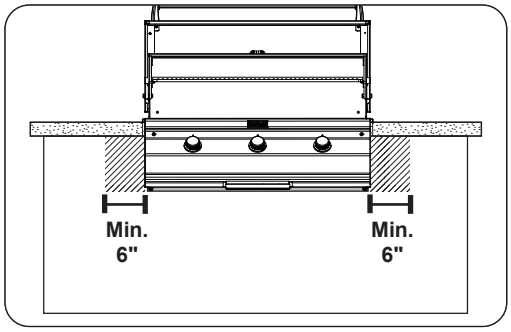

Fig. 19-1 Control panel clearances

COMBUSTION AIR AND COOLING AIRFLOW

Proper airflow (front-to-back, Fig. 19-2) MUST be maintained for the unit to perform as it was designed. If airflow is blocked, overheating and poor combustion will result. Do not block the 1" front air inlet along the bottom of the control panel.

CAUTION: Wind blowing into or across the rear oven lid vent (Fig. 19-4) can cause poor performance and/or dangerous overheating. Install the grill so that the prevailing wind blows toward the front of the grill (Fig. 19-3). **A wind deflector is included (pre-installed) to assist in proper airflow during windy conditions.**

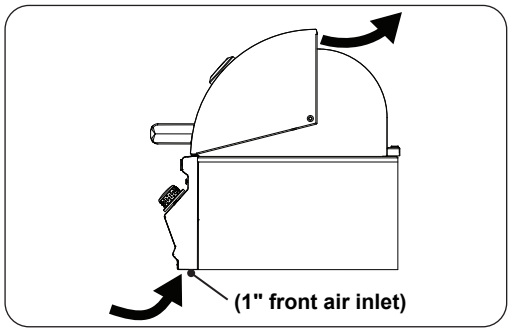

Fig. 19-2 Airflow diagram

GAS-SUPPLY PLUMBING REQUIREMENTS

The gas supply is to be routed into the enclosure, near the unit. Your individual installation may vary. **Observe the National Fuel Gas Code and all local codes. Leak test at all connections.**

The gas supply must be sized to provide minimum inlet pressure at the maximum flow rate (BTU/hr). Undue pressure loss will occur if the pipe is too small, or the run is too long. Gas supply pipe must be ½" minimum interior diameter. If the gas line is longer than 20', a larger diameter line may be necessary. Refer to the NFPA 54 guidelines for further details.

DO NOT use a rubber hose within the enclosure.

A C.S.A. approved stainless steel flex connector is included and pre-installed to the valve manifold, and routes to the gas supply. A flare-to-NPT adapter is provided for 1/2" pipe. The use of any rigid pipe, semi-rigid tubing, and connectors must comply with the Standard for *Connectors for Outdoor Gas Appliances and Manufactured Homes*, ANSI Z21. 75 (CSA 6.27).

Use a pipe joint compound resistant to all gasses on all NPT pipe fittings. Make sure to tighten every fitting securely. **Do not use pipe joint compound to connect flare fittings.**

Important: A shut-off valve (not included) in the gas supply line is required. It must be installed within 6 feet of the unit and must be easily accessible. Use a pipe joint compound resistant to all gasses on all NPT pipe fittings **except flare fittings**. Refer to NFPA 54 guidelines for further details.

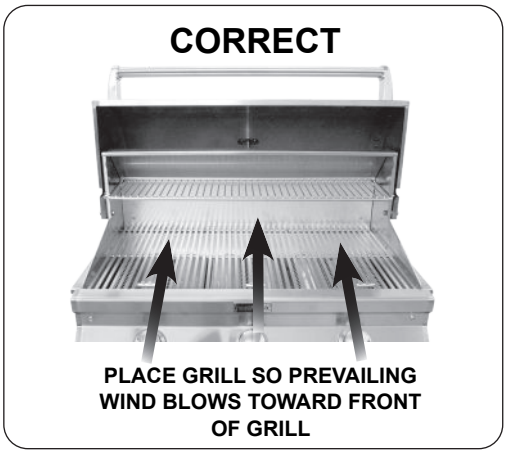

Fig. 19-3 Airflow direction - CORRECT

GAS SUPPLY AND MANIFOLD PRESSURES:

For **natural gas** - normal 7" water column (w.c.), minimum 5", maximum 10 1/2". For **propane gas** - normal 11" w.c., minimum 10", maximum 13".

Note: An additional regulator may be needed to meet these requirements.

Note: A sediment trap in the gas supply line is recommended where applicable. It should be installed downstream of the shut-off valve as close to the unit as possible. Refer to NFPA 54 guidelines for further details.

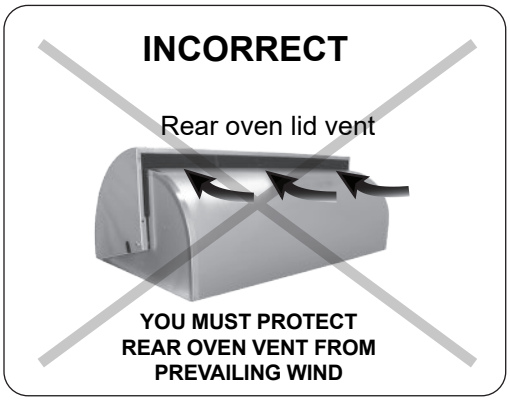

Fig. 19-4 Airflow direction - INCORRECT

DIAGRAMMATICAL REPRESENTATIONS OF OUTDOOR AREAS

The following figures are diagrammatical representations of outdoor areas, as defined in Clause 4.25.3. See INSTALLATION REQUIREMENTS section.

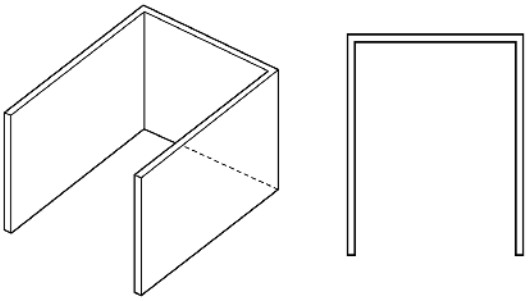

Fig. 20-1 Outdoor area - Example 1

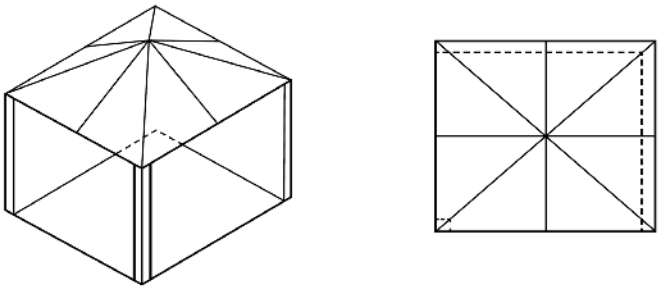

Fig. 20-2 Outdoor area - Example 2

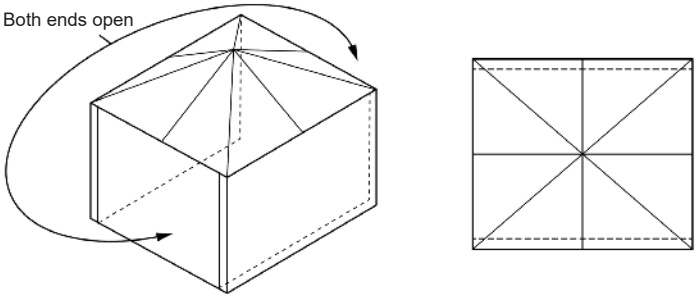

Fig. 20-3 Outdoor area - Example 3

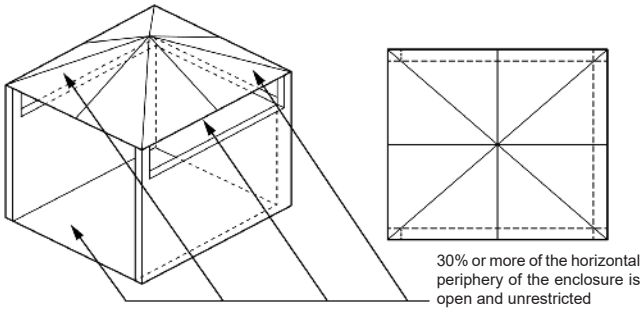

Fig. 20-4 Outdoor area - Example 4

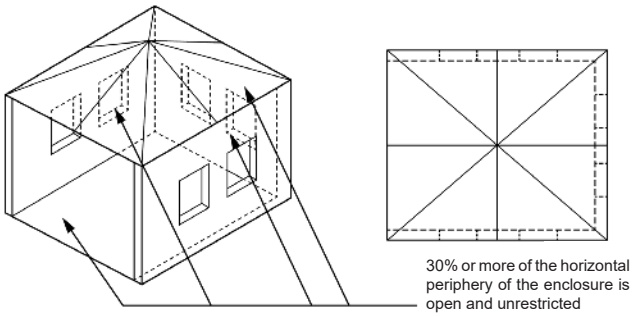

Fig. 20-5 Outdoor area - Example 5

MODEL SPECIFICATIONS

		CM430i		CM540i		CM650i	
		Nat.	L.P.	Nat.	L.P.	Nat.	L.P.
Main burner	Quantity	2	2	3	3	3	3
	Nat./L.P. orifice drill size	#41	#54	#43	#55	#41	#54
	Nat./L.P. air shutter opening *	3/8"	5/16"	3/8"	5/16"	3/8"	5/16"

* These are air shutter factory settings. These settings may require adjustment due to gas conversion, altitude, or other local conditions. See AIR SHUTTER ADJUSTMENT / BURNER FLAME INSPECTION section.

Table 2 - Product Specifications

	CM430i	CM540i	CM650i
Fire Magic insulating liner model # *†	23130-52	23150-52	3177-52
Vent hood model # *‡	36-VH-7 ‡	36-VH-7 ‡	42-VH-7 ‡
Vent hood spacer model # *‡	36-VH-7-02 ‡	36-VH-7-02 ‡	42-VH-7-02 ‡
Vent hood duct cover model # *‡	36-VH-7-DC ‡	36-VH-7-DC ‡	42-VH-7-DC ‡

* If applicable, not included
† If installing this grill in a combustible enclosure, the correct insulating liner must be used. Consult liner instructions for counter cutout dimensions and installation.
‡ This model meets the minimum requirements; larger models are also acceptable.

Table 3 - Grill Supporting Products

Model	Height (Top to bottom)		Width (Left to right)		Depth (Front to back)
	Bottom of hanger to top		Maximum width **(C)**	Control panel width **(D)**	Maximum depth **(E)**
	With oven lid OPEN **(A)**	With oven lid CLOSED **(B)**			
CM430i	20 3/4"	13 5/8"	27 5/8"	26"	25 3/4"
CM540i	20 3/4"	13 5/8"	34 1/8"	32 1/2"	25 3/4"
CM650i	20 3/4"	13 5/8"	39 3/4"	38 1/4"	25 3/4"

Table 4 - Grill Dimensions

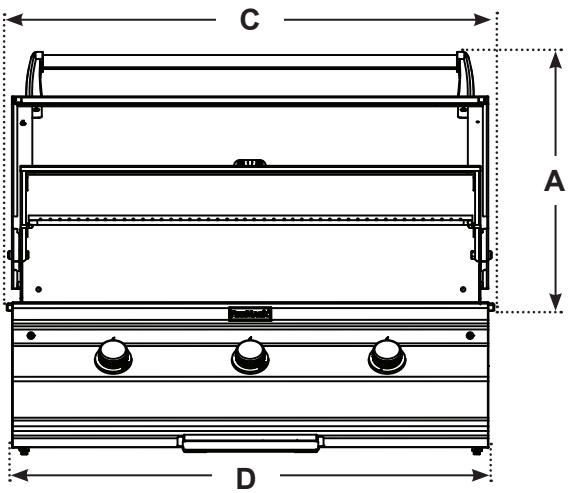

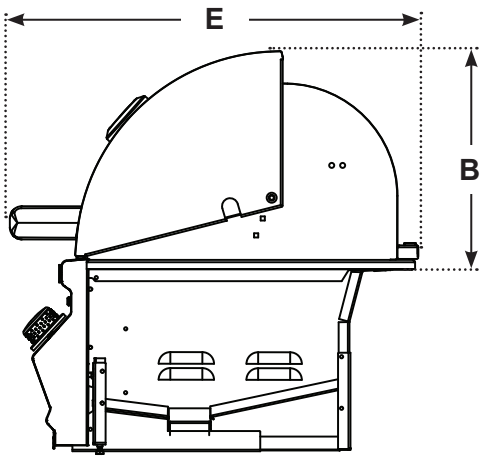

(CM540i shown) **Fig. 21-1**

CHOICE MULTI-USER GRILL REPLACEMENT PARTS LIST

IMPORTANT

Remove all packing material and discard prior to lighting.

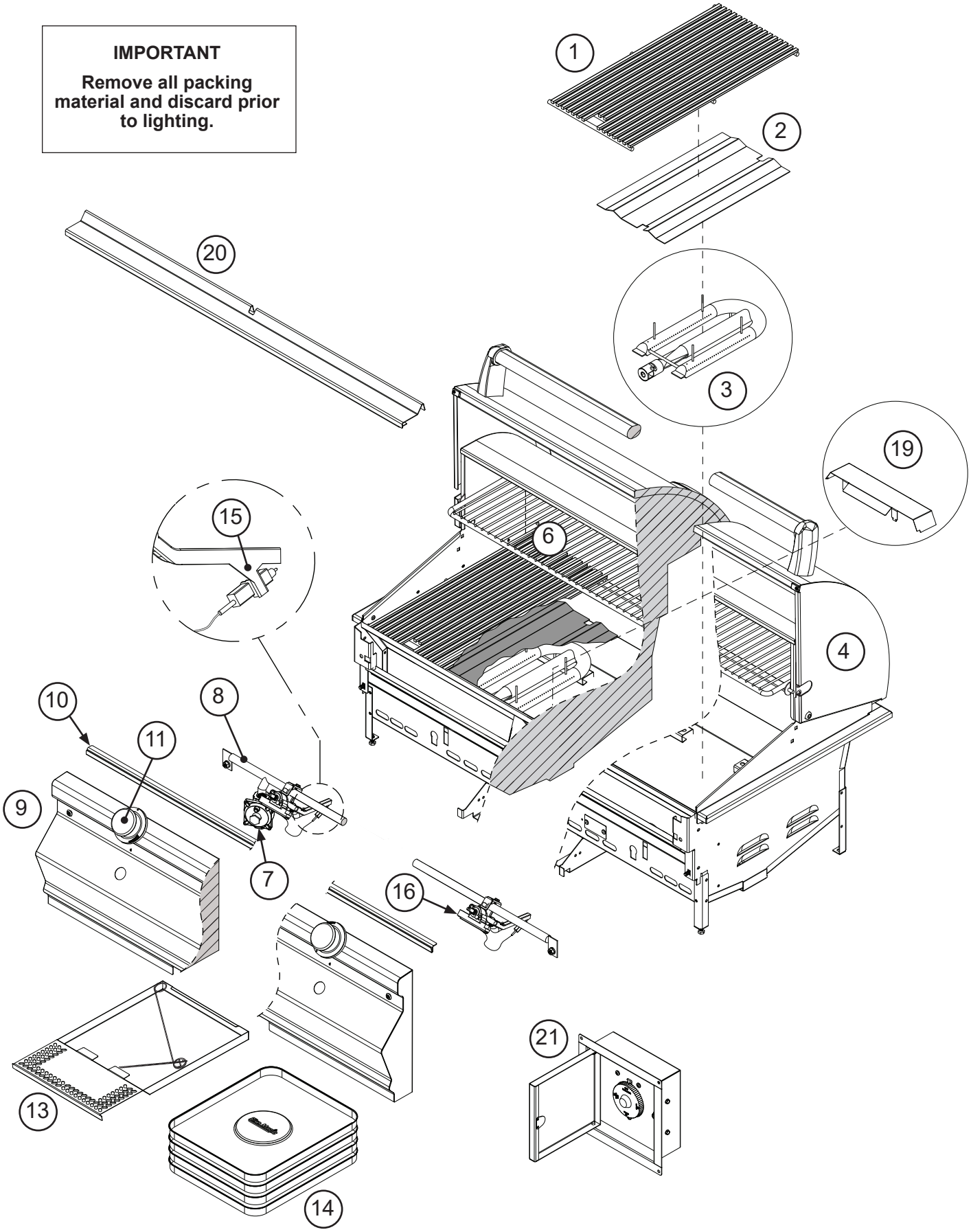

To order replacement parts, contact your local Fire Magic® dealer.

CHOICE MULTI-USER GRILL REPLACEMENT PARTS LIST (Cont.)

		CM430i		CM540i		CM650i	
Item	Description	Part No.	Qty.	Part No.	Qty.	Part No.	Qty.
1.	Stainless cooking grid (set of 2 or 3)	3542-DS-2	1	23543-DS-3	1	3542-DS-3	1
2.	Flavor grid (set of 2 or 3)	3063-S-2	1	3064-S-3	1	3065-S-3	1
3.	Main burner	3042-60	2	3042-60	3	3042-60	3
4.	Oven lid w/ oven thermometer	23729-58	1	23733-58	1	23734-50	1
5.	Oven lid spring kit *	23729-72	1	23729-72	1	23729-72	1
6.	Warming rack	3672S-B	1	3673S-B	1	3675S-B	1
7.	Convertible regulator	PR-4	1	PR-4	1	PR-4	1
8.	Valve manifold	24131-12	1	24171-12	1	24181-12	1
9.	Control panel assembly	24131-02	1	24171-02	1	24181-01	1
10.	Cooking grid locking channel	24131-03	1	24171-03	1	24181-02	1
11.	Control knob w/ locking screw	3026CM	2	3026CM	3	3026CM	3
12.	Oven lid thermometer w/ bezel *	23307	1	23307	1	23307	1
13.	Drip tray with match holder	3093	1	3093	1	3093	1
14.	Drip tray liner (set of 4)	3557	1	3557	1	3557	1
15.	Main burner igniter assy only	3199-50	2	3199-50	3	3199-50	3
16.	Main burner valve w/ orifices & igniter	3025	2	3025	3	3025	3
17.	Natural gas orifice(s) *	3031-41-2	1	3031-43-3	1	3031-41-3	1
18.	Propane gas orifice(s) *	3031-54-2	1	3031-55-3	1	3031-54-3	1
19.	Air baffle	24194-40	1	24194-40	1	24194-40	1
20.	Wind deflector	23729-19	1	23733-19	1	23745-20	1
21.	Timer box	5521-11T	1	5521-11T	1	5521-11T	1

* Not shown

It is not required to remove the control panel or knobs to install this unit.
DO NOT lift the unit from the control panel when installing.

BUILD / CONSTRUCT ENCLOSURE

GFRC islands are available (for select models). They accommodate your grill and side cooker/accessories. Build the enclosure per the instructions supplied with the unit.
Alternatively, a custom-built enclosure can be constructed. Construct the enclosure according to your individual install preference, while following the guidelines found in the ENCLOSURE REQUIREMENTS and INSTALLATION REQUIREMENTS sections.

- Construct the enclosure in an appropriate location (ensure all requirements of this manual and all local codes are met when determining location).
- **Follow all information regarding enclosure parameters, ventilation, drainage, cylinder requirements, cutout dimensions, and clearances listed in the ENCLOSURE REQUIREMENTS and INSTALLATION REQUIREMENTS sections.** Failure to do so will prevent proper operation and can cause property damage or personal injury.

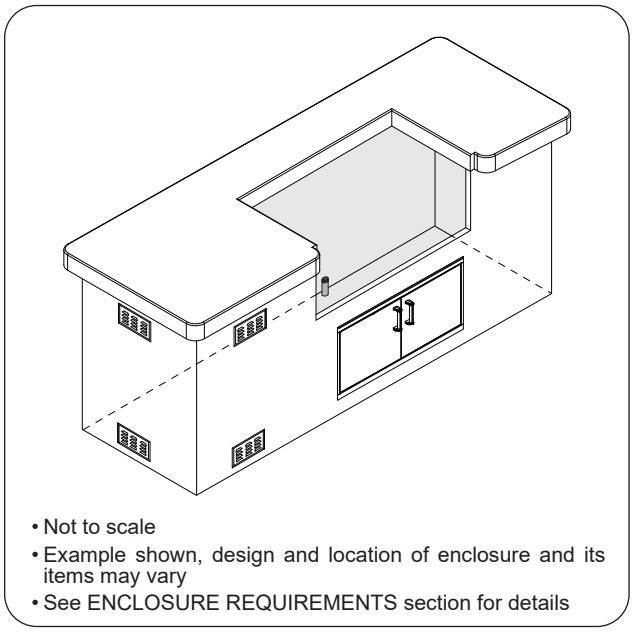

Fig. 24-1 Enclosure construction overview (if applicable)

INSTALL TIMER BOX

Reference the instruction manual included with the timer box for all details.

INSTALL INSULATING LINER (if applicable)

If installing your unit in a combustible enclosure, the correct insulating liner must be used. Refer to the instructions supplied with the liner for installation.

SLIDE UNIT INTO ENCLOSURE CUTOUT

CAUTION: THE GRILL IS HEAVY AND REQUIRES TWO OR MORE PEOPLE FOR SAFE HANDLING.

1. Carefully slide the unit into the enclosure cutout, being sure to simultaneously route the flex connector down into the enclosure. (If using an insulating liner or if the enclosure has a solid area beneath the unit, route the gas connections through the hole/cutout found in the enclosure/insulating liner. For details on the hole/cutout, see the illustration under CUTOUT DIMENSIONS in the ENCLOSURE REQUIREMENTS section or refer to the instructions supplied with the liner.)
   - Ensure the gas connections are clear, undamaged, and completely inserted into the opening, and that the unit is correctly inserted without any obstructions between it and the countertop.
   - Ensure the unit fully slides in so that the control panel sits flush against the enclosure front wall. See the COUNTERTOP OVERHANG section in ENCLOSURE REQUIREMENTS for details.
   - If installing on a countertop with an irregular/textured surface, a bead of silicone sealer rated for 400° F (204° C) or higher is recommended to protect from the elements.

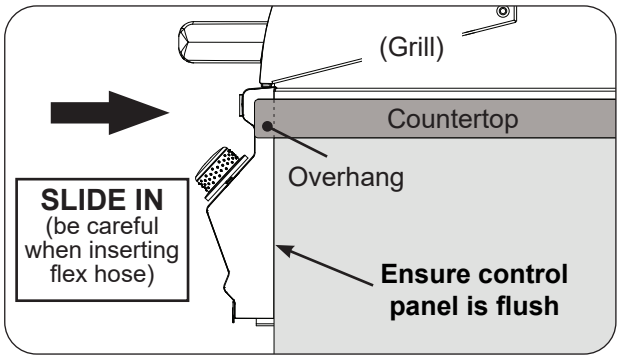

Fig. 24-2 Slide in unit (ensure flush)

2. Rotate the front support adjustment bolts (up or down) until the grill hanger rests flush on the countertop, AND, the adjustment bolts are touching the supporting structure found at the bottom of the cutout (lower support). Use a 7/16" open-end wrench as needed. See Fig. 25-1.
   - The grill should not solely rest on just the hanger or just the adjustment bolts.
   - The bolts MUST be used to provide support to the hangers.

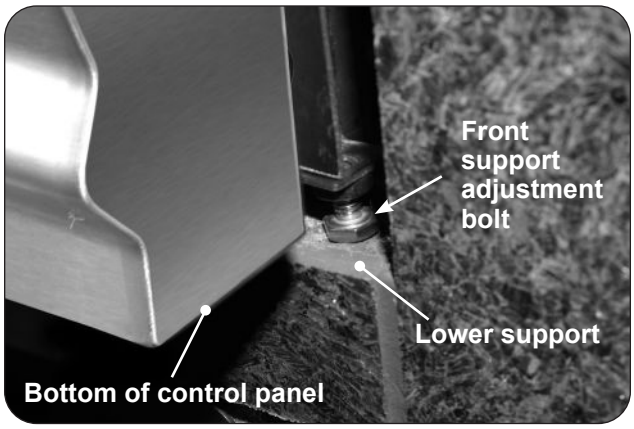

Fig. 25-1 Front support adjustment bolts

CONNECT GAS SUPPLY

To Connect To Propane Cylinder:
Read the safety warnings and follow the instructions in the section SAFE USE AND MAINTENANCE OF PROPANE GAS CYLINDERS.

Note: When a propane cylinder is installed inside of the enclosure, the guidelines found in the GRILL ENCLOSURE / VENTILATION REQUIREMENTS section MUST be followed.

To Connect To Natural Or Household Propane Gas Supply:

CAUTION: Use only C.S.A. listed stainless-steel flex connectors within the enclosure.

WARNING

A rubber or plastic connector will rupture or leak, resulting in an explosion or serious injury if used inside the appliance enclosure.

- Before connecting the gas supply to your appliance, pressures MUST be tested and MUST NOT exceed 10.5" w.c. for Nat. gas and 13" w.c. for L.P. gas. An additional regulator may be required.
- Refer to the GAS SUPPLY PLUMBING REQUIREMENTS section for all details on the gas supply and its setup.

1. **Turn OFF the gas supply at the source.**
2. Run the attached flex connector (coming from the grill) to the timer box area.
3. Using two wrenches, connect the flex connector coming from the grill to the **1/2" flare adapter labeled OUT**. See Fig. 25-2. Ensure the connection is tightened securely.
4. **Connect gas source to IN:** Using two wrenches, connect a flex connector (not included) to the **1/2" flare adapter labeled IN**. See Fig. 25-2. Ensure the connection is tightened securely.
5. Route the flex connector coming from the timer box to the gas supply stub (see Fig. 25-2).

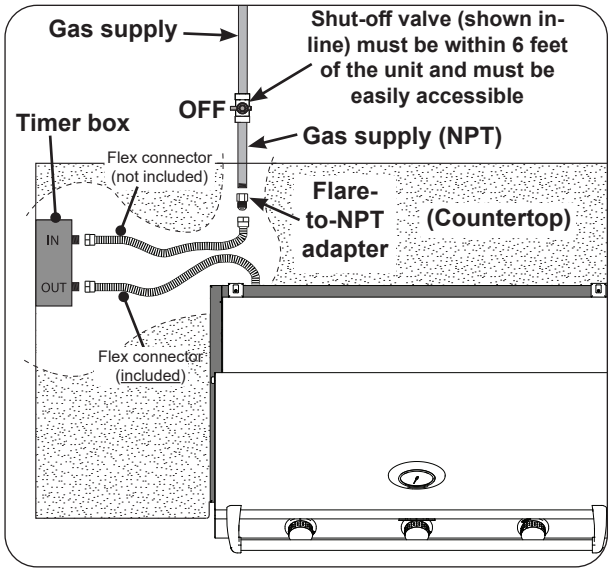

Fig. 25-2 Household LP & Nat. gas diagram

6. A shut-off valve is required within 6 feet of the unit and must be easily accessible.

   If shut-off valve is installed in-line:

   - Install the supplied flare-to-NPT adapter to the gas supply (NPT) using a pipe joint compound resistant to all gasses (see Fig. 26-1, A). Tighten securely.
   - Connect the flex connector to the adapter (see Fig. 26-1, A). Tighten securely.

   If shut-off valve is connected to end of gas supply stub:

   - Connect the flex connector to the shut-off valve (flare) (see Fig. 26-1, B). Tighten securely.

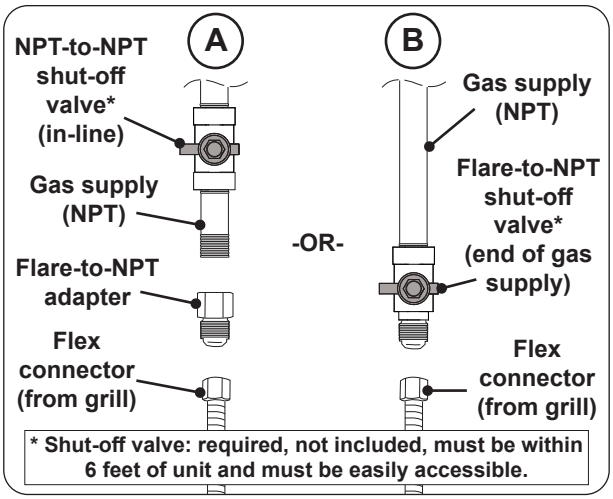

Fig. 26-1 Connecting to a gas line

LEAK TEST

Turn all burner valves to the **OFF** position. Turn on the gas supply, and test at all connections for leaks using a soapy water solution. If bubbles appear, a leak is present. Turn off the gas and tighten at all connections. Repeat until no leaks are present. If a leak persists, turn off the gas supply and contact the local gas company or dealer. **NEVER USE A FLAME TO CHECK FOR LEAKS.**

Once the leak test is complete, turn off the gas supply and proceed.

INSTALL FLAVOR GRIDS

Place the flavor grids directly onto the studs on the burners (see Fig. 26-2). **For 540i and 650i models, the slightly larger grids are designed to be placed over the outside burners, and the slightly smaller grid over the inner burner.** The flavor grids allow heat from the burners to be evenly distributed throughout the cooking area.

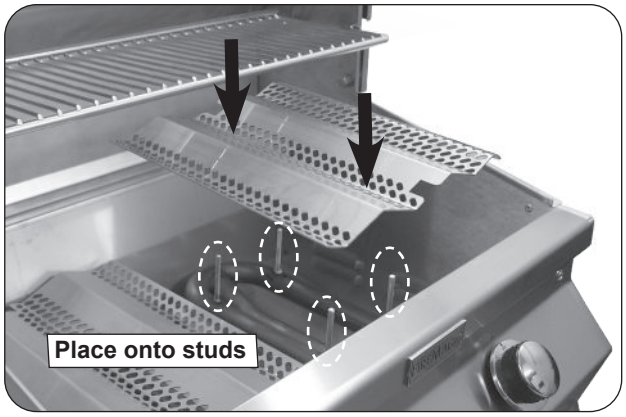

Fig. 26-2 Install flavor grids

INSTALL COOKING GRIDS

Note: Wear heat-resistant gloves if necessary.

1. Carefully place the rear of a cooking grid between the locking ridge of the rear wall (see Fig. 26-3, A). Then, carefully place the front of the cooking grid onto the front grid rest of the grill (see Fig. 26-3, B).
2. Repeat for the other grids.

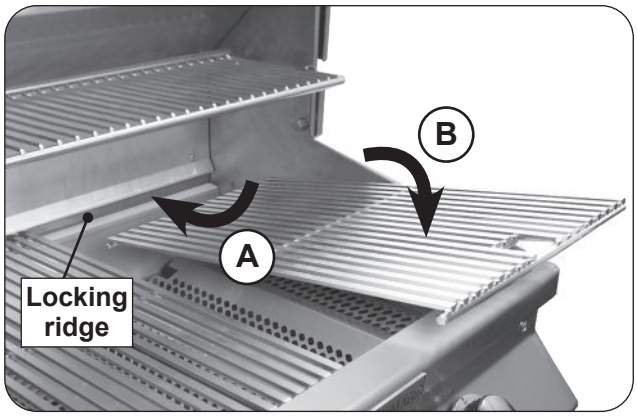

Fig. 26-3 Install cooking grids

SECURE COOKING GRIDS

Remove control knobs and control panel

1. Turn the control knobs to the OFF position and turn off the gas supply to the unit.
2. Pull the control knobs from the stems and set aside (see Fig. 27-1).
3. Using a Phillips screwdriver, unscrew and remove the control panel fastener screws and washers (located on the left and right front face of the control panel). Retain the screws for later re-installation. See Fig. 27-1.
4. Carefully remove the control panel by lifting and pulling the control panel from the frame. Set control panel aside (see Fig. 27-2).

Install cooking grid locking channel

1. Attach the cooking grid locking channel to the rear top lip of the control panel (see Fig. 27-3).
2. With the channel attached to the control panel, carefully reinstall the control panel back onto the grill. Ensure the locking channel is laying flat on the cooking grids. See Fig. 27-4.
3. Reinstall the two screws to secure the control panel.
4. Insert the control knobs onto the valve stems. Ensure the control knobs are in the OFF position.

Fig. 27-1 Remove knobs and screws

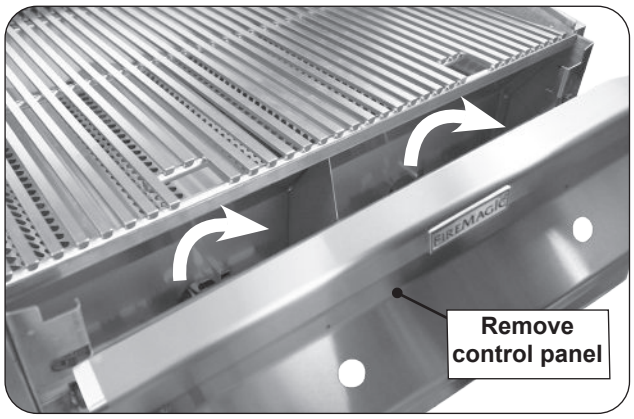

Fig. 27-2 Remove control panel

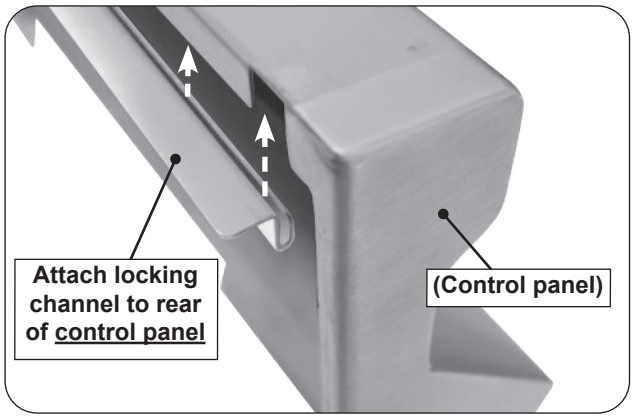

Fig. 27-3 Attach cooking grid locking channel

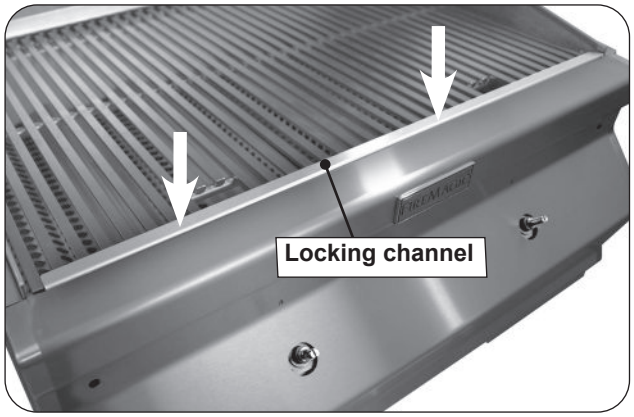

Fig. 27-4 Install cooking grid with locking channel

LOCK CONTROL KNOBS

1. **Turn the control knobs to the OFF position and turn off the gas supply to the unit.**
2. Remove the rubber grip from the control knob (see Fig. 28-1).
3. Insert the included .078" (2mm) hex key through the small hole located on the side of the knob and fully tighten the screw (see Fig. 28-2).
4. Replace the rubber grip.
5. Repeat this process for the remaining knobs.

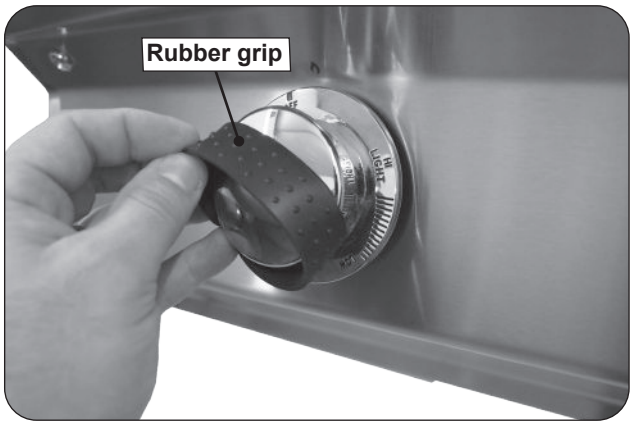

Fig. 28-1 Remove rubber grips

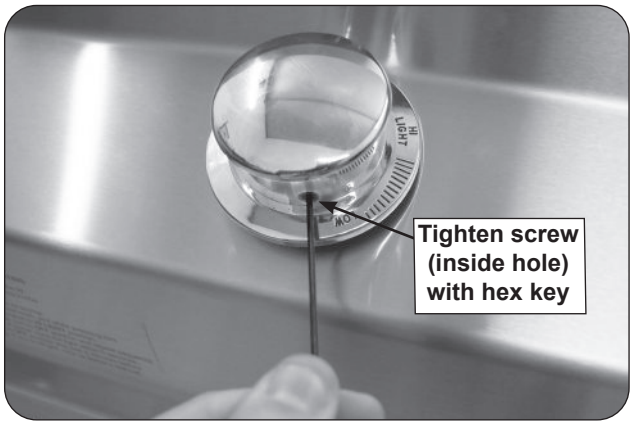

Fig. 28-2 Tighten screw to lock knobs

INSTALL DRIP TRAY

Your grill includes a pack of four drip tray liners. Place a liner into the drip tray as shown in Fig. 28-3, and fully insert the drip tray into the bottom front of the control panel.

Note: The liner must fit under the rear lip and two front tabs found on the drip tray.

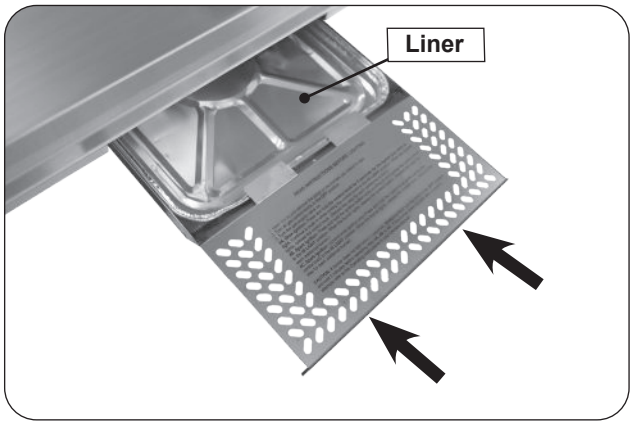

Fig. 28-3 Install drip tray

OPERATION TEST

After installation, perform an operation test of the grill and its features/accessories. Refer to the following sections for details.

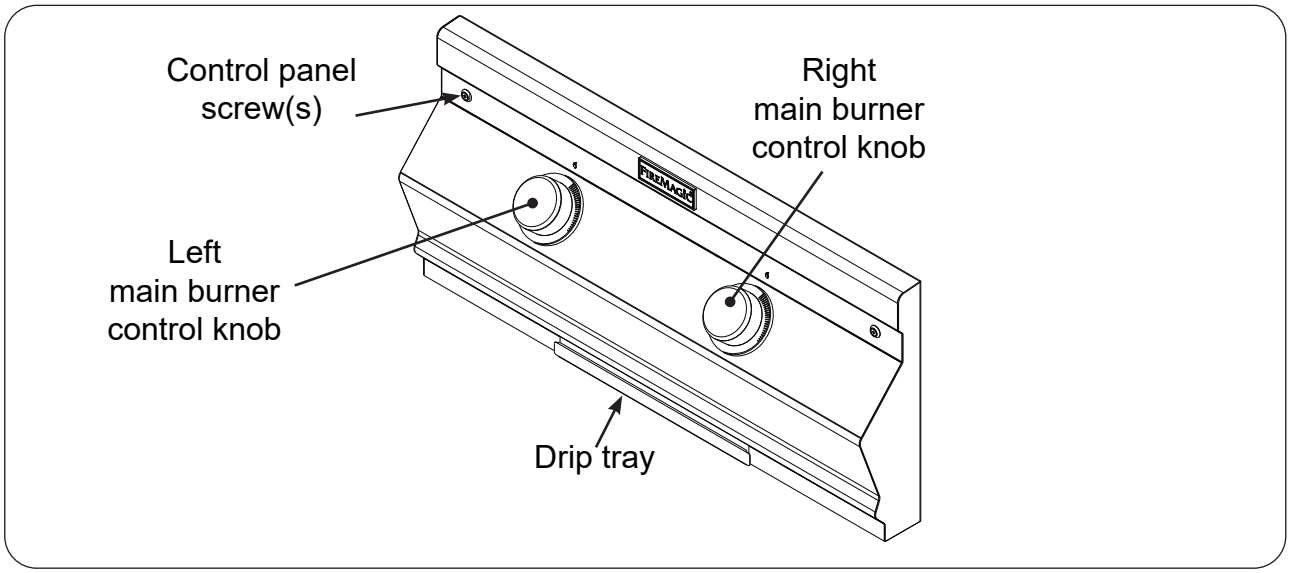

Fig. 29-1 CM430i controls

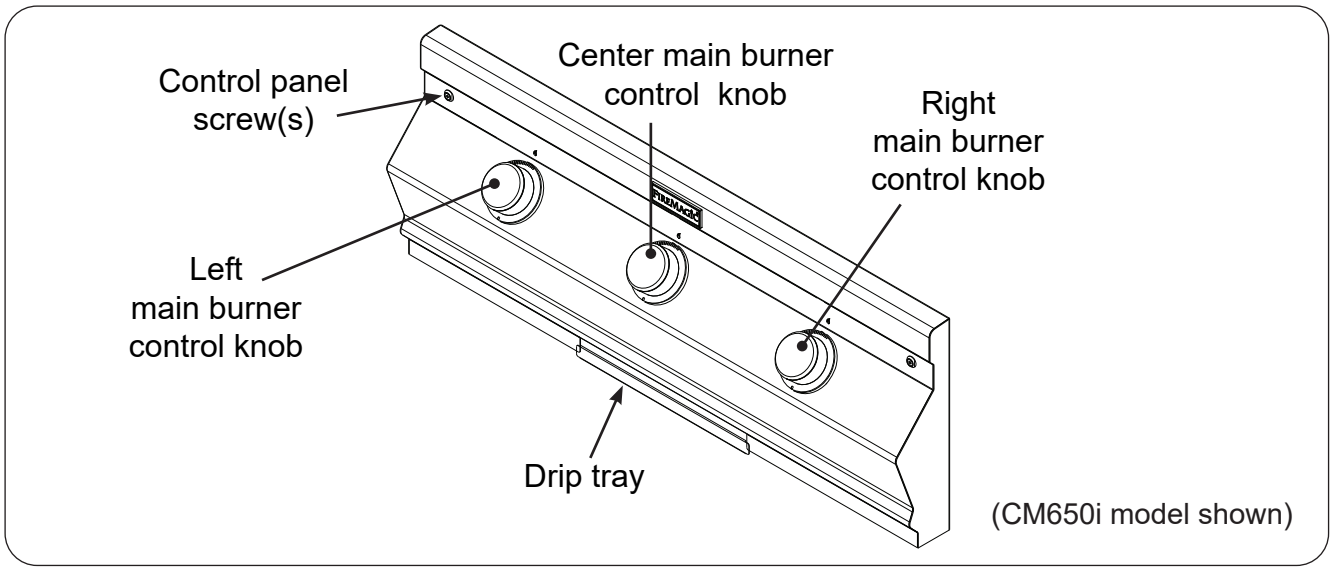

Fig. 29-2 CM540i and CM650i controls

USING THE GRILL

BEFORE INITIAL USE

Ensure that:

- the unit has been properly installed and leak tested by a qualified professional service technician and as instructed in this manual.
- you have read and understand all of the information in this manual.

BEFORE EACH USE

Ensure that:

- you smell around the appliance area for gas. If you smell gas (and all control knobs are in the **OFF** position), immediately shut off the gas supply and contact a qualified professional service technician or the gas supplier for inspection.
- the required vent openings and surrounding area of the enclosure are clear at all times.
- the cooking area and drip tray are clean, and the drip tray is properly installed.
- you inspect all piping and hoses for damage, cuts, wear, and tear. Replace any damaged components prior to use.

OPERATION

- **The unit becomes HOT during use. NEVER touch any part of the cooking area or surrounding hot surfaces with bare hands. Use long-handled insulated BBQ tools and wear an insulated glove / oven mitt.**
- **Always keep your face and body as far from the unit as possible during use. Avoid wearing loose-fitting clothing as they could ignite.**
- **This appliance is designed as an attended appliance. DO NOT leave this appliance burning when unattended.**
- **NEVER cover more than 75% of the cooking surface with griddles, pots or pans to prevent overheating.**
- **After each use, turn the control knob(s) to the OFF position and turn off the gas supply to the unit.**

After reading and understanding all bullets above, follow these steps to light and use your grill:

1. Light the grill per the LIGHTING INSTRUCTIONS section.
2. Turn the control knobs to the HI-LIGHT position, close the hood, and allow the grill to preheat for 15 minutes or until desired cooking temperature is reached.
3. Place the food on the grill and cook as desired. Monitor the flames and the temperature, and adjust the heat setting if necessary.
4. See the sections below and the following pages for all other information regarding use.

WIND CONSIDERATIONS

Proper airflow (front-to-back, Fig. 30-1) MUST be maintained for the unit to perform as it was designed. See the INSTALLATION REQUIREMENTS section for details.

When using the unit in windy conditions, the wind can disrupt the airflow and cause overheating. To prevent overheating during windy conditions, do not leave the hood closed with the burners on high for more than 15 minutes.

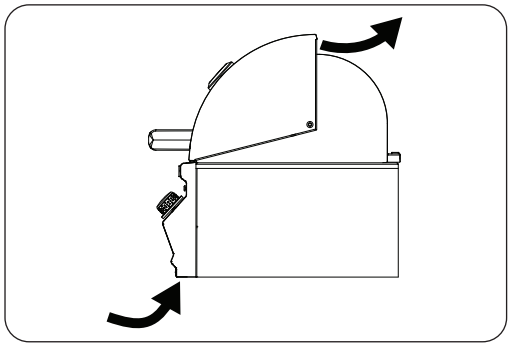

Fig. 30-1 Airflow diagram

AFTER EACH USE

1. Operate on high with hood closed for 10-15 minutes to burn off all grease.
2. Turn off the grill and brush the cooking grids to remove all residue.

CAUTION: Use long-handled insulated BBQ tools and wear an insulated glove / oven mitt.

3. When the grill is cool, check and clean the drip tray. Then cover the grill.

Note: For additional cleaning information, refer to the SERVICING AND CLEANING section.

LIGHTING (IGNITION) INSTRUCTIONS

Read all instructions before lighting, and follow these instructions each time you light the unit.

SPARK IGNITION LIGHTING

Note: DO NOT turn on more than one valve at a time for either spark ignition or manual lighting.

1. Open the oven hood.
2. Turn all gas control knob(s) to their **OFF** position(s).
3. Turn on the gas at its source.

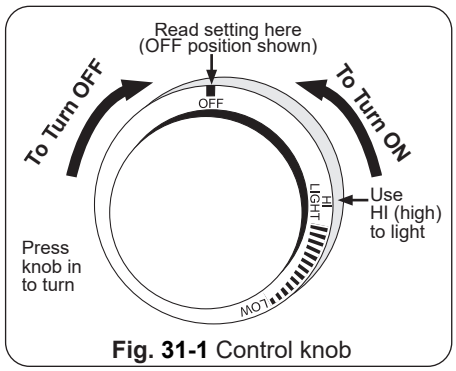

Fig. 31-1 Control knob

4. Set timer control knob to the desired cooking time.
5. Depress the desired control knob, and while pressing turn it counterclockwise to the **HI LIGHT** position. Once the burner lights, release the knob.

Note: Turning the knob will create a "click" sound and ignite the burner. If there is no ignition, immediately turn to **OFF** position and repeat sequence quickly until the burner ignites.

CAUTION: If a burner does not light within five (5) seconds of turning on the control knob, depress the knob and turn it to the **OFF** position. WAIT FIVE (5) MINUTES before repeating step 5. If you smell gas, follow the instructions on the cover of this manual. If the burners still do not light after several attempts, refer to the instructions for manual lighting.

6. Repeat step 5 for each additional burner to be lit.

SETTING THE TIMER

To use, set the dial (turn clockwise) to the desired time to shut off. The dial is marked in 3 twenty minute increments (any position in between is an estimate of that set time). The timer dial will auto rotate (counter-clockwise) and will shut off the gas supply when the dial reaches **OFF** (i.e. the time is completed).

Important: When using the timer for periods of less than twenty minutes, you must first turn the dial past twenty minutes (to activate), then return (counter-clockwise) to the desired amount of time. This will ensure proper timer operation. See Fig. 31-4.

MANUAL LIGHTING

CAUTION: Always wait five (5) minutes for gas to clear after any unsuccessful lighting attempt.

1. Follow steps 1 through 4 (left).
2. Insert either a burning long-barrel butane lighter, a burning long-stem match, or a burning match held by a wire extension holder through the cooking grid opening to the top of the burner (Fig. 31-2).
3. While holding the match or lighter flame at the top of the burner, depress the control knob and while pressing turn it counterclockwise to the **HI LIGHT** position. Remove the lighter or match when the burner lights, and release the control knob.
4. If the burner does not light within five (5) seconds of turning the control knob, **immediately depress the knob and turn the valve to OFF**. WAIT FIVE (5) MINUTES before repeating steps 2 through 4 of the MANUAL LIGHTING instructions.

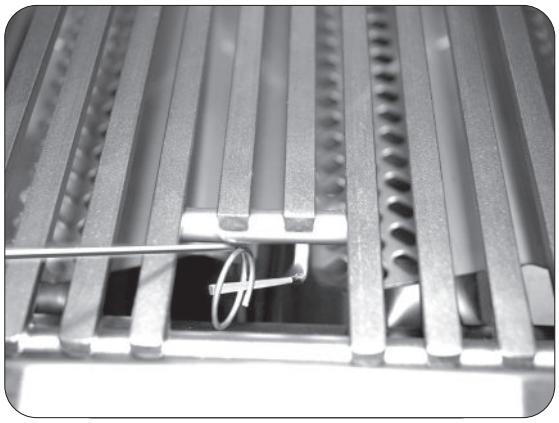

Fig. 31-2 **- Manual lighting**

SHUTTING OFF THE UNIT

To shut off the unit, depress each valve control knob and while pressing turn it clockwise to the **OFF** position.

Always close the valve from the gas supply after each use of the unit.

Fig. 31-4

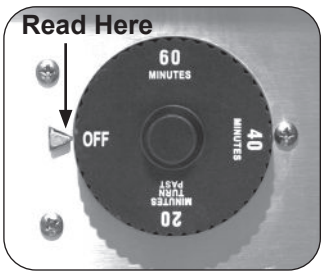

Timer knob in OFF position

ALLUMAGE DES INSTRUCTIONS (D'ALLUMAGE)

Lisez toutes les instructions avant l'allumage, et suivez ces instructions chaque fois vous lumière le unité.

ÉCLAIRAGE À ÉTINCELLES

Note: NE PAS ouvrir plus d'une vanne à la fois pour l'allumage commandé ou l'allumage manuel.

1. Ouvrez la hotte du four.
2. Tournez tous les boutons de commande de gaz à leurs positions de repos.
3. Allumez le gaz à sa source.

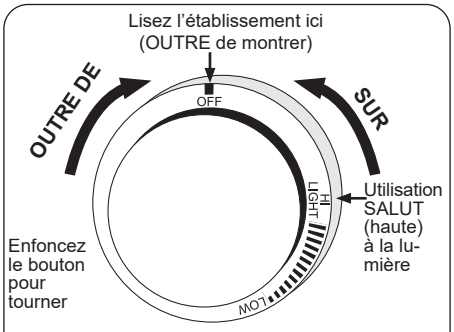

Fig. 32-1 - bouton de commande

4. Placez le bouton de commande de temporisateur au temps de cuisson.
5. Appuyez sur le bouton de commande souhaité et, tout en appuyant sur cette touche, tournez-le dans le sens inverse des aiguilles d'une montre jusqu'à la position **HI LIGHT**. Une fois le brûleur allumé, relâchez le bouton.

Note: Tourner le bouton crée un «clic» et allume le brûleur. S'il n'y a pas d'allumage, mettez-le immédiatement sur **OFF** et répétez la séquence rapidement jusqu'à ce que le brûleur s'allume.

ATTENTION : Si un brûleur ne s'allume pas dans deux ou trois (2-3) secondes suivant la mise sur le bouton de commande, appuyez sur le bouton et le tourner vers la position **OFF**. ATTENDEZ CINQ (5) MINUTES avant de répéter l'étape 5. Si vous sentez le gaz, suivez les instructions sur la couverture de ce manuel. Si les brûleurs ne s'allument toujours pas après que plusieurs tentatives, se rapportent aux instructions pour l'éclairage manuel.

6. Répétez l'étape 5 pour que chaque brûleur additionnel soit Lit.

ÉTABLISSEMENT DU TEMPORISATEUR

Pour l'utiliser, placez le sélecteur (tourner dans le sens horaire) à l'heure souhaitée pour couper. Le cadran est marqué en 3 tranches d'une minute vingt (Toute position entre les deux est une estimation du fait que le temps). Le cadran de la minuterie rotation automatique (sens anti-horaire) et coupera l'alimentation en gaz lorsque la molette atteint **OFF** (le temps est terminé).

Important: Lorsque vous utilisez la minuterie pour des périodes de moins de vingt minutes, vous devez d'abord tourner le cadran au-delà de vingt minutes (pour l'activer), puis retour (sens anti-horaire) à la quantité désirée de temps. Cela permettra d'assurer le bon fonctionnement de la minuterie. Voir Fig. 32- 4.

ÉCLAIRAGE MANUEL

ATTENTION: Attendez toujours cinq (5) minutes le gaz pour se dégager après que n'importe quelle tentative non réussie d'éclairage.

1. Suivez les étapes 1 à 4 (à gauche).
2. Insérez un allumeur brûlant de butane de long-baril, une allumette brûlante de long-tige, ou une allumette brûlante tenue par un support de prolongation de fil par la grille à cuire s'ouvrant au dessus du brûleur (fig. 32-2).
3. Tout en maintenant le match ou flamme du briquet au dessus du brûleur, appuyez sur le bouton de commande et en appuyant son tour dans le sens antihoraire à la position HI LIGHT. Enlevez l'allumeur ou assortissez quand le brûleur s'allume, et libérez le bouton de commande.
4. Si le brûleur ne se allume pas dans les cinq (5) secondes de tourner le bouton de commande, enfoncez immédiatement le bouton et tournez la valve à AU LOIN. ATTENDEZ CINQ (5) MINUTES avant de répéter les étapes 2 à 4 des instructions manuelles d'éclairage.

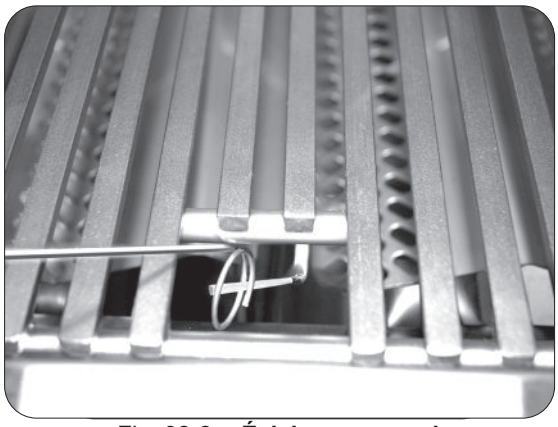

Fig. 32-2 **- Éclairage manuel**

ARRÊT DU UNITÉ

Pour couper le unité, diminuez chaque bouton de commande de valve et tout en pressant tour il dans le sens des aiguilles d'une montre à la position de repos.

Fermez toujours la valve de la fourniture de gaz après chaque utilisation du unité.

Fig. 32-4

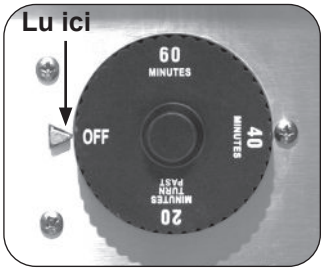

Bouton de temporisateur AU LOIN (temporisateur de 3 heures montré)

SERVICING AND CLEANING

Your grill requires regular cleaning and maintenance. Refer to these instructions for details. Performing these procedures will ensure proper operation, appearance, and safety.

WARNINGS

- Prior to servicing or cleaning make sure the unit is completely cool, the control knobs are turned to the OFF position, and the gas supply is shut off (as applicable and unless otherwise stated).
- Wear appropriate gloves and safety glasses during any servicing or cleaning.
- DO NOT spray any cleaner or liquids on the grill when hot.
- The grill MUST be cleaned regularly to prevent grease build-up and other food deposits. A clean and well maintained grill prevents the risk of grease build-up and grease fires.
- Verify proper operation after servicing or deep cleaning.
- See INSTALLATION, OPERATION, AND SAFETY INFORMATION section for additional related information.

CLEANING YOUR GRILL

Before Each Use

1. **Inspect and clean the exterior surfaces of the unit:** With a cool grill, clean any dust, grease, splatter, or spills as needed with a damp clean cloth.

After Each Use

1. **Perform a burn-off and clean the cooking grids:** Operate the grill on high with the hood closed for 15 minutes to burn-off food and grease and allow for an easier cooking grid clean. Then turn OFF the grill and use a grill brush to clean the cooking grids of all residue. Use long-handled insulated BBQ tools and wear an insulated glove / oven mitt.
2. **Check and clean your drip tray:** When the grill is cool, carefully remove the drip tray and dispose of contents appropriately. If tray is equipped with a liner, dispose of the liner. Clean tray in a soapy water solution if needed. For tough deposits, a copper pad can be used. Rinse and dry completely. Replace a new liner and insert the tray back into the grill. Order more drip tray liners through your local dealer.
3. **Cover your grill:** Once the grill is dry and cool, cover your grill with a Fire Magic protective cover (not included).

Twice A Year (or as needed) - Deep Clean

1. **Interior of grill:** In addition to cleaning the cooking grids and drip tray, a deep clean of the interior of the grill, burners, and all components MUST be performed twice year (or as needed depending on use). Refer to the CARE, CLEANING, & MAINTENANCE GUIDE provided with your grill, or simply scan the QR code on the right.

Important: The burner ports and carry-over ports/slots MUST be kept clean to ensure proper ignition and operation. The guide provides all details on cleaning.

2. **Exterior of grill:** With a cool grill, use a grill cleaner (or a soapy water solution) and a clean cloth to remove grease and dirt from the outside of the grill. For tough deposits, a copper pad can be used. Always wipe with the grain. Rinse and dry completely. Then follow up with a stainless steel cleaner and a clean cloth. DO NOT use other cleaners or chemicals.

   If this routine cleaning is not performed, the stainless steel may become dull and develop surface rust (due to use and atmospheric conditions). If left uncleaned, significant damage and pitting may occur.

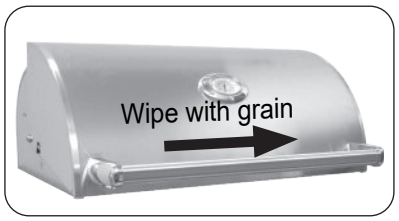

Fig. 33-1 Wipe with grain

Important: DO NOT use steel wool, any other metal tools, or any other cleaners/chemicals to clean the exterior other than recommended above. Such items promote rust.

Note: Due to the nature of stainless steel, temperatures produced by the grilling process will cause discoloration. This can be reduced by routine cleaning.

For Environments High In Salt, Chloride, Or Other Corrosive Chemicals

When this grill is installed in a corrosive environment such as near the ocean (salt air), poolside (chlorine and/or pool chemicals) or any other location with exposure to high salt/chloride content or corrosive chemicals/solutions, it will be more susceptible to corrosion and MUST be maintained/cleaned more frequently.

- DO NOT store any corrosive chemicals (chlorine, hydrochloric acid, fertilizer, etc.) near your stainless steel grill.
- DO NOT allow any corrosive materials (masonry dust, debris, etc.) to settle on your stainless steel grill.
- These environments, chemicals, and materials may cause the 304 stainless steel to develop surface rust and consequently pitting. Under these conditions the grill exterior MUST be cleaned at least monthly. Inspect your grill often and clean accordingly.

Protecting Your Grill

An optional Fire Magic protective cover will protect your grill when not in use. Install the cover on a cool and dry grill. DO NOT cover a damp grill. During high humidity or after rainy conditions, remove the cover to dry trapped moisture if present. (If the cover is installed over a damp grill it can cause surface rust.)

Ensure that the INSIDE of the cover is DRY before putting it back on the grill.

CONTROL PANEL REMOVAL

Note: Wear heat-resistant gloves if necessary.

1. **Turn the control knobs to the OFF position and turn off the gas supply to the unit.**
2. Remove the rubber grip from a control knob (see Fig. 35-1).
3. Insert the included .078" (2mm) hex key through the small hole located on the side of the knob and loosen the screw (see Fig. 35-2).
4. Pull the control knob from the stem to fully remove.
5. Repeat for the other knobs.
6. Remove the drip tray.
7. Using a Phillips screwdriver, unscrew and remove the control panel fastener screws and washers (located on the left and right front face of the control panel). See Fig. 35-3. Retain the screws for later re-installation.
8. Carefully remove the control panel by lifting and pulling the control panel from the frame (see Fig. 35-4).

Note: Ensure the cooking grid locking channel remains attached to the control panel when reinstalling. See INSTALLATION - SECURE THE COOKING GRIDS section for details.

WARNING: During reinstallation: prior to opening the gas shut-off valve, be sure the control knobs are in the OFF position.

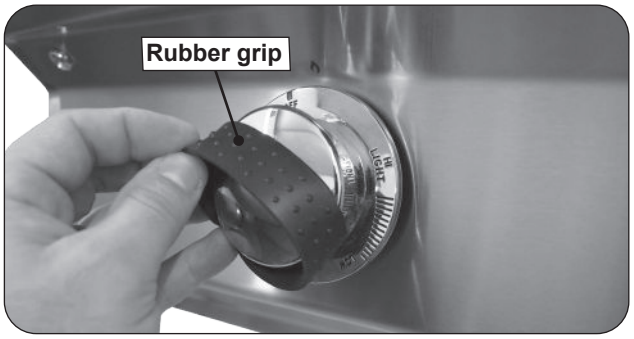

Fig. 35-1 Rubber grips removal

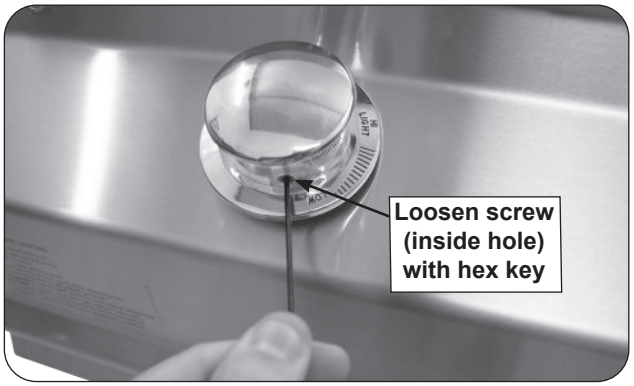

Fig. 35-2 Loosen screw to free knob

Fig. 35-3 Screws removal

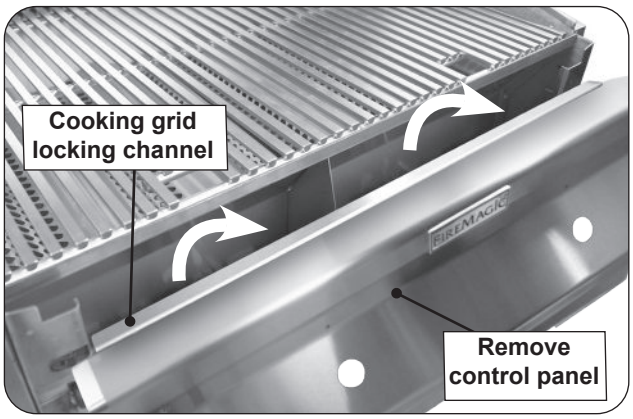

Fig. 35-4 Control panel removal

COOKING GRID REMOVAL

Note: Wear heat-resistant gloves if necessary.

1. **Turn the control knobs to the OFF position and turn off the gas supply to the unit.**
2. Remove the control panel. Ensure the cooking grid locking channel is removed along with the control panel (see Fig. 36-1). See the CONTROL PANEL REMOVAL section for details.
3. Carefully remove the cooking grids (see Fig. 36-2).

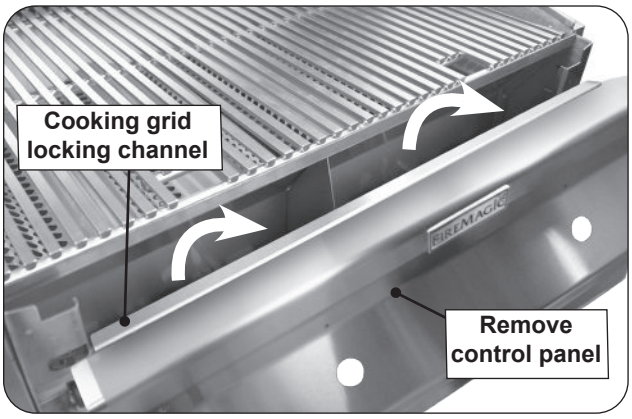

Fig. 36-1 Control panel / grid locking channel removal

Fig. 36-2 Cooking grids removal

BURNER REMOVAL

1. **Ensure the knobs are in the OFF position, and the gas supply is turned off.**
2. Remove the control panel, cooking grids, and flavor grids and set them aside. See the CONTROL PANEL REMOVAL and COOKING GRID REMOVAL sections for details.
3. Locate the burner clip (located over the rear center tube of the burner) and slightly pinch and remove the clip from the burner support. See Fig. 37-1.
4. Carefully lift the burner from the burner support anchor peg holes and out from the hole in the forward fire wall.
5. To replace the burner, slide the open cylindrical end of the burner around the orifice, enveloping it and centering on it. Then lower the back end anchor pegs into the burner support anchor peg holes.

Note: It is critical to the continued safe functioning of the burners that the orifices are centered and completely inside the burner gas inlets.

6. Re-install the burner clip around the burner and into the holes in the burner support.
7. Replace the flavor grids, cooking grids, and control panel.

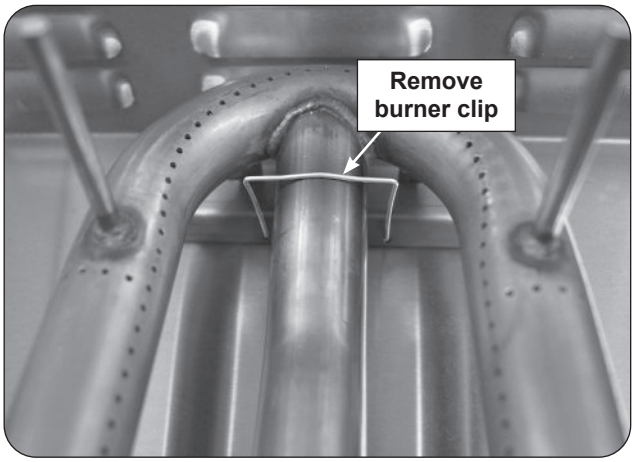

Fig. 37-1 Main burner removal

WARMING RACK REMOVAL

Note: Wear heat-resistant gloves if necessary.

1. Locate the warming rack locking brackets found on the rear left and right side of the warming rack (see Fig. 37-2).
2. Use a short-handled Phillips screwdriver to remove the screw from a locking bracket. Then remove the bracket. See Fig. 37-3.
3. Repeat for the other bracket.
4. Carefully remove the warming rack by lifting the front end up from the hooks, then outward.

Important: When reinstalling, place cardboard (or similar) on the cooking grid surface to prevent the screws from falling down into the unit.

Fig. 37-2 Warming rack locking brackets

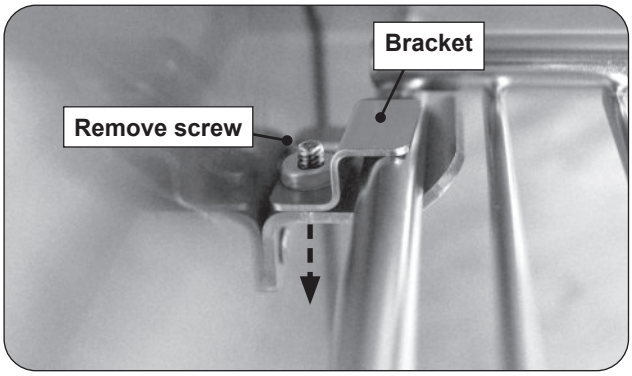

Fig. 37-3 Warming rack locking bracket removal

CONVERTING THE GAS TYPE

WHEN CONVERTING TO A NEW GAS TYPE, THE ENCLOSURE MUST HAVE PROPER VENTILATION FOR THE NEW GAS TYPE. See the ENCLOSURE REQUIREMENTS section for complete details.

CAUTION: Make sure the grill is at a safe temperature and isolated from gas and electrical supplies before beginning.

For your safety, exercise caution, and make sure you have adequate hand protection, such as gloves, when handling metal parts.

Apply Conversion Label

This grill comes from the factory configured for one type of gas as marked on the label behind the control panel.

When the grill is converted, the label for the new gas (included at original shipping) MUST be filled out and applied next to the existing label mentioned above.

Convert Regulator

The gas regulator, located behind the control panel (see CONTROL PANEL REMOVAL section), must be set for the type of gas used to fuel the grill. To check the regulator setting, remove the cap in the center of the regulator (Fig. 38-1, A). Holding the cap vertical (see Fig. 38-1, B), the letters at the bottom of the plastic stalk indicate the gas type for which the regulator is currently configured.

If the text on the bottom of the regulator stalk does not match the gas type connected to the grill, remove the stalk from the cap, invert, and replace into center of cap. Replace cap on the regulator, screwing down until snug.

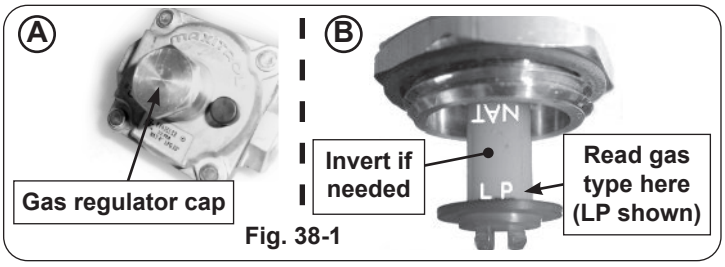

Fig. 38-1

Convert Gas Orifices

When converting the grill to a different gas type, each burner's orifice must be replaced with the corresponding orifice for the new gas.

See MODEL SPECIFICATIONS TABLE, Table 2 to determine the proper orifice sizes for each burner.

Important: It is critical to the operation of each burner that its orifice be fully inserted into the center of its orifice opening.

WARNING: HAZARDOUS OVERHEATING WILL OCCUR IF A NATURAL-GAS ORIFICE IS USED WITH PROPANE GAS.

1. Remove the control panel, cooking grids, and flavor grids and set them aside. See the CONTROL PANEL REMOVAL and COOKING GRID REMOVAL sections for details.
2. Remove the burners. See BURNER REMOVAL section for details.
3. Use a $^3/_8$" hex nut driver to remove the exposed orifice (Fig. 38-3). Check orifice. If needed, replace it with the correct orifice for the new gas.
4. Replace the burners.

Note: It is critical to the continued safe functioning of the burners that the orifices are centered and completely inside the burner gas inlets.

5. Replace the flavor grids, cooking grids, and control panel.

Connect To New Gas Supply

Plumb the unit as appropriate for the new gas supply. (Additional components may be needed for your specific setup.) **Be sure to leak test at all connections.**

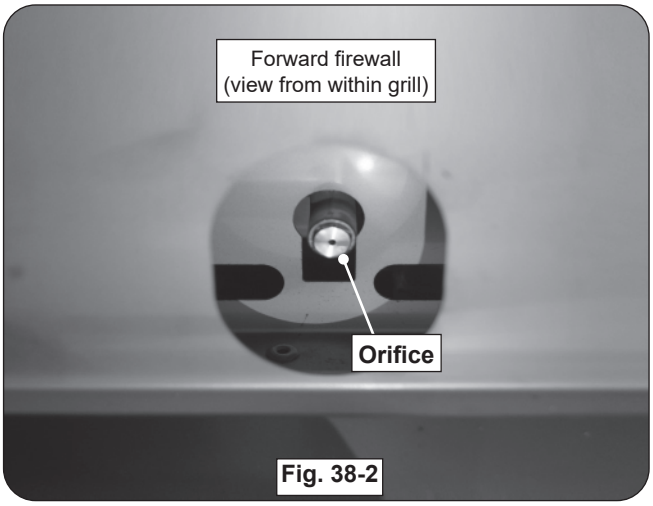

Fig. 38-2

AIR SHUTTER ADJUSTMENT / BURNER FLAME INSPECTION

Important: Air shutters are preset at the factory (see Table 2 in MODEL SPECIFICATIONS). However, gas conversion, altitude, or other local conditions may make it necessary to adjust the air shutters.

Note: To verify proper settings, the flames of the burners should be visually checked for proper flame appearance and behavior. Light the grill with the burner(s) on HI setting. Allow at least 2 minutes to burn. See below and Fig. 39-1. The flames should:

- be blue and stable with little to no yellow tips
- burn quietly, and appear to touch the burner

If the flames appear unstable, yellow, noisy, or lift away from the burner, follow the steps below.

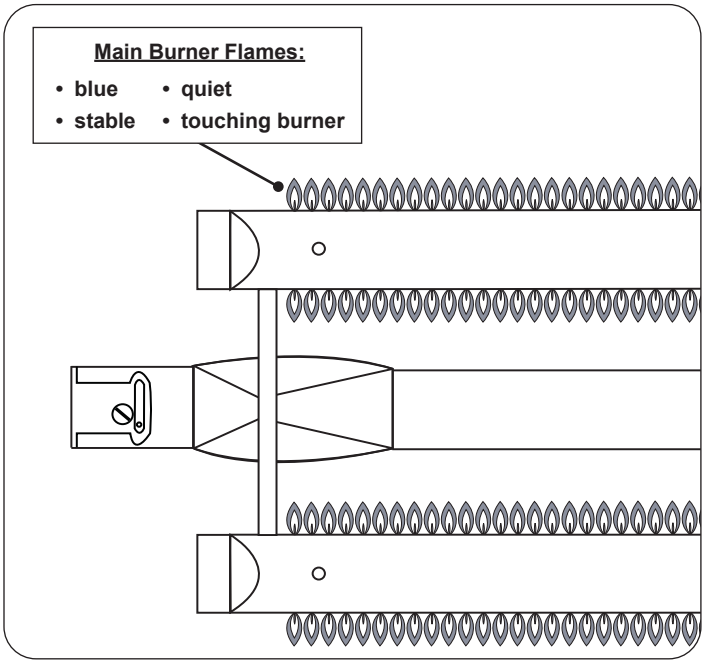

Fig. 39-1 Proper flame appearance

Main Burner

Begin with a completely cool unit. Remove the burners (see BURNER REMOVAL section). First ensure the burner orifice, ports, venturi tubes, and air shutter openings are all clear of any insect or insect nests. If they are blocked, clean them, reinstall the burners, and reinspect the flames. If adjustment is still needed, **allow the unit to cool**, remove the burner, and proceed to the steps below.

1. To adjust the air shutter, loosen the adjustment screw with a flathead screwdriver. Then rotate the shutter to open or close it. See Fig. 39-2 for details.
   - Begin with the appropriate factory setting for your model (see Table 2 if needed).
   - If the flames were excessively yellow (insufficient air), open the shutter to allow more air to the burner. If the flames were noisy and lifting off the burner in some areas, close the shutter to allow less air to the burner. Adjust accordingly.

Note: Make minimal adjustments. Very small changes result in major changes in flame appearance.

2. Reinstall the burner, light the grill with the burner on HI, and observe the flames. If needed, allow the grill to completely cool, and repeat the adjustment process until the proper flame is achieved.
3. Once finished, allow the unit to completely cool, remove the burner, and tighten the adjustment screw. Reinstall the burner.
4. Repeat for all other main burners as needed.
5. Reinstall all other components that were removed.

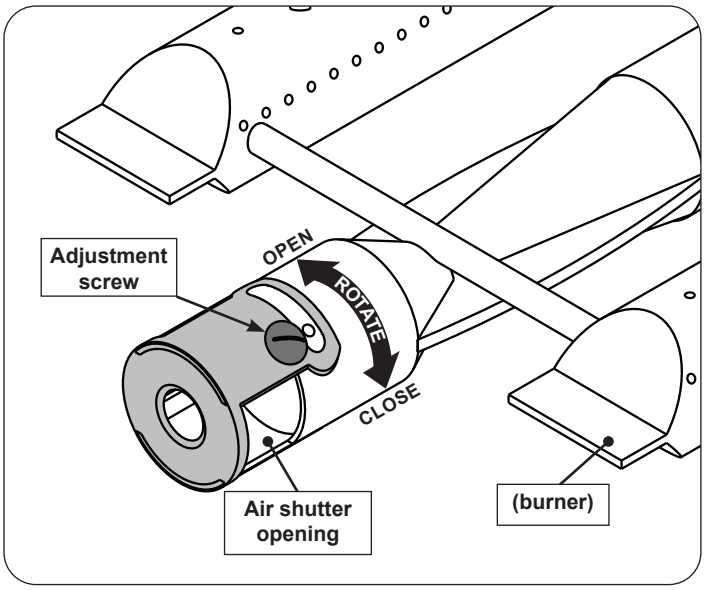

Fig. 39-2 Main burner air shutter adjustment detail

VALVE "LOW" SETTING ADJUSTMENT

Stability of the "low" setting on all burners may vary due to wind direction, appliance configuration, and position. If your burner goes out when set on low, the valve "low" setting needs adjustment.

Note: Adjustments MUST only be performed by a qualified professional service technician.

To adjust the valve "low" setting:

1. **Ensure the unit is completely cool and the knobs are in the OFF position.**
2. Remove the control panel, cooking grids, and flavor grids and set them aside. See the CONTROL PANEL REMOVAL and COOKING GRID REMOVAL sections for details.
3. Re-install the control knobs on the valve stems with the control panel removed.
4. Light the burner on HIGH, then turn the burner to LOW setting. While the burner is lit, remove the control knob from the valve.
5. Locate the FLATHEAD adjustment screw found above the valve stem and below the manifold (see Fig. 40-1).
6. Using a flathead screwdriver, slowly turn the adjustment screw a little at a time (30° to 45°) in either direction. Adjust the screw as needed until the flame is approximately 1/4" in height from all the burner ports, and the flames are stable.

CAUTION: Only adjust the FLATHEAD screw. Adjusting other screws may result in a dangerous gas leak.

7. Once the appropriate setting is reached, re-install the control knob and shut off the burner valve.
8. Repeat this procedure for other burner valves, if needed.
9. Re-install the flavor grids, cooking grids, control panel, and any other components that were removed.

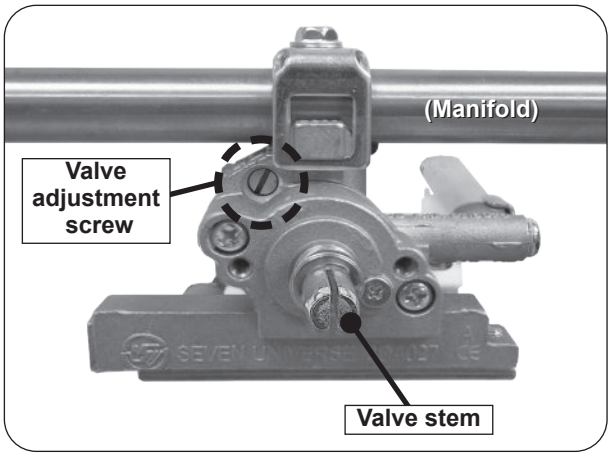

Fig. 40-1 Valve adjustment screw location

TROUBLESHOOTING

If you have trouble with the unit, please use this list to identify the problem. By trying one or more of the solutions to the possible cause, you should be able to solve the problem. If this list does not cover your present problem, or if you have other technical difficulties with the unit, please contact your local dealer.

PROBLEM	POSSIBLE CAUSE	CORRECTION
Ignition system failure	1. Improper air shutter adjustment 2. No spark generated at the valve 3. Low gas pressure 4. Front carry-over ports clogged 5. Igniter malfunction 6. Igniter electrode sparking to firebox and not to flame tube	1. Adjust air shutters. 2. Retry to light. If ignition failure continues, contact dealer for valve replacement. 3. Have the gas co. check supply pressure. 4. Clean burner ports. 5. Contact dealer for replacement. 6. Adjust flame tube to ensure it receives the spark.
Insufficient heat / low flame	1. Burner ports partially blocked by debris 2. Improper air-shutter adjustment 3. Using propane orifice for natural gas 4. Low gas pressure/flame (propane) 5. Low gas pressure/flame (natural) 6. L.P. regulator hose stuck/damaged	1. Remove burners and clean out ports. 2. Adjust air shutters. 3. Check/change orifices. 4. Shut off all valves, including propane tank, and follow lighting instructions exactly. (See important note* below.) 5. Have a qualified professional service technician check for proper gas supply, setup, and pressure. 6. Replace L.P. regulator hose.
Uneven heating	1. Burner ports partially blocked by debris 2. Small spiders or insects in burner 3. Improper air shutter adjustment	1. Remove burners and clean out ports. 2. Inspect burners and orifices for spider webs or other debris that may block flow. 3. Adjust air shutters.
Burner goes out on LOW	1. Valve “Low” setting needs adjustment	1. Light burner on HIGH, immediately turn to LOW setting. Remove knob from valve and using a small flat screwdriver, slowly turn the adjustment screw in the stem, a little at a time (30° to 45°), in either direction, until the flame is approximately 1/4” in height from burner ports.

*** Important:** Propane tanks are equipped with a safety shutdown device that may cause low or no gas/flame at the burners if operating and lighting instructions are not followed exactly. **If you suspect the propane tank safety shutoff is in effect:** 1) Shut off all grill valves. 2) Shut off tank valve. 3) Open and close a main burner valve. 4) Open tank valve. 5) Follow the LIGHTING INSTRUCTIONS. Lighting instructions are located in your owner’s manual and printed on the grill’s metal drip tray. If the problem persists, continue troubleshooting, or contact your local dealer or R. H. Peterson for assistance.

WARRANTY

PETERSON FIRE MAGIC MULTI-USER GRILLS AND ACCESSORIES
LIMITED WARRANTY

When used in a multi-user setting* including but not limited to apartment complexes, multi-family dwelling complexes, schools, hotels, fire stations, police stations, etc.

*Excluding restaurants and settings where the grill usage is primarily commercial.

R.H. Peterson Co. ("RHP") warrants your Fire Magic® grill to be free from defects in material and workmanship.

Fire Magic Stainless steel grill housing, burners, stainless steel rod cooking grids, brass valves, inner liners and manifold assemblies are warranted for **FIVE (5) YEARS**.

Fire Magic exterior Glass Fiber Reinforced Concrete (GFRC) grill island systems are warranted for **ONE (1) YEAR**.

All other components, except batteries, are warranted for **ONE (1) YEAR**.

A COPY OF YOUR SALES SLIP FOR PROOF OF PURCHASE IS REQUIRED

This warranty applies to the original purchaser for products which are installed in the United States or Canada and which are operated and maintained as intended for single family residential usage (if the unit is installed in a multi-user setting, a separate Multi-User Limited Warranty applies and is available from RHP). This warranty is valid only with proof of purchase, commences on the date of purchase, and terminates (both as to original and any replacement products) on the anniversary date of the original purchase of the product per the above schedules.

This warranty covers defects in material and workmanship. This warranty **does not** cover parts which become defective as a result of negligence, misuse, use not in compliance with the Installation and Owner's Manual, accidental damage, improper handling, improper storage, improper installation, **lack of required routine maintenance** (as specified in the Installation and Owner's Manual), electrical damage, local gas impurities or failure to protect against combustible materials. Product must be installed (and gas must be connected) as specified in the Installation and Owner's Manual by a **qualified professional installer**. This warranty **does not** apply to rust, corrosion, oxidation, or discoloration unless the affected part becomes inoperable. RHP products including valves, pilots and controls, are designed and certified to be used as a system. Modifications to products which are not specifically authorized will void this warranty and could render the product to be unsafe. Burners, valves, parts, accessories, remotes, etc. used with this product must be RHP products or this warranty is void.

Warrantied items will be repaired or replaced at RHP's sole discretion. This warranty **does not** cover labor or labor related charges, except as provided by separate specific written programs from RHP. All repair work must be performed by a qualified professional service person and requires prior approval of RHP.

RHP may require the defective product or part to be returned to the factory to determine the cause of failure. RHP will pay freight charges if the product or part is determined to be defective. This warranty does not cover breakage in shipment from our independent distributor to its customer if the damage is determined to have occurred during that shipment.

This warranty specifically excludes liability for **indirect**, **incidental**, or consequential damages. Some states and provinces do not allow the exclusion or limitation of incidental or consequential damages, so the above exclusion may not apply to you. This warranty gives you specified legal rights, and you may have other rights that vary from state to state or province.

For additional information regarding this warranty, or to place a warranty claim, contact the RHP dealer where the product was purchased.

When contacting your RHP dealer or the R.H. Peterson Co., please provide the following information:

- Your name, address, telephone number, e-mail
- Sales receipt showing where purchased and date purchased
- Model number, serial number of product, date code
- Relevant information: installer, additions, repairs, when defect was first noted

TO REGISTER YOUR PRODUCT ONLINE GO TO: WWW.RHPETERSON.COM, AND CLICK ON PRODUCT REGISTRATION. THANK YOU FOR YOUR PURCHASE.

COMMONWEALTH OF MASSACHUSETTS REQUIREMENTS

This appliance is approved for installation in the state of Massachusetts subject to the following requirements:
Install this appliance in accordance with 248 C.M.R., the Rules and Regulations Governing Plumbers and Gas Fitters. The installer or service agent must be a plumber or gas fitter licensed in the Commonwealth of Massachusetts. The flexible gas line connector used must not exceed 36 inches (92 centimeters) in length. The individual manual shut-off must be a T-handle type valve, listed and approved by the state of Massachusetts.

Quality Check				Date:_____		
Burner Orifices	Nat.	L.P.	Leak Test:	_____	Model#:	_____
Main:	____	____	Burn Test:	_____	Serial#:	_____
Other:	____	____	Gas Type:	Nat. / L.P.	Air Shutter:	_____
					Inspector:	_____