FIREMAGIC®

PRE-FAB ELECTRIC GRILL ISLAND BUNDLE

Model #s: **DC250-44XX**
DC250-D-44XX

INSTALLATION AND OWNER'S MANUAL

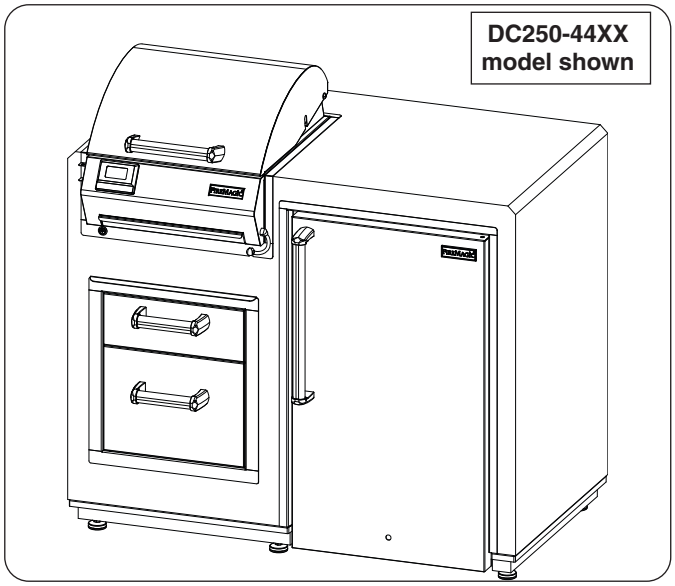

INSTALLER: Leave these instructions with consumer.
CONSUMER: Retain for future reference.

IMPORTANT: READ THESE INSTRUCTIONS CAREFULLY BEFORE STARTING INSTALLATION OR USE.

- When installing this island, it must be installed with the supplied Fire Magic grill and accessories.
- **Follow all instructions included with the grill and accessories to be installed into this island.**

  This manual has additional information regarding specifications, installation, operation, care, and troubleshooting. Read all manuals carefully before starting installation or use.
- This island design provides all necessary ventilation.

SPECIFICATIONS AND DIMENSIONS

Description	DC250-44XX	DC250-D-44XX
Height	36"	36"
Width	44"	44"
Depth	24"	24"
Weight	280 lbs	300 lbs

Table 1 - Product Specifications

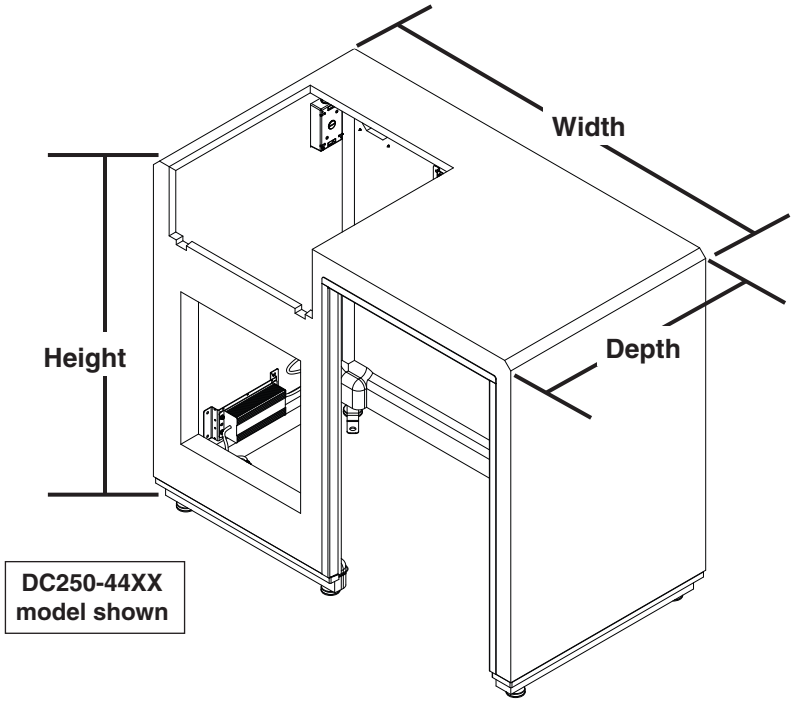

Description	Value	Qty.
Electric Grill input electrical requirements	120VAC / 20 AMP minimum / 60Hz / GFCI outlet	N/A
Refrigerator/Lights input electrical requirements (if applicable)	115VAC / 15 AMP minimum / 60Hz / GFCI outlet	N/A
LED power supply rating	12V / 60 watts	N/A
Remote transmitter battery type	3V/CR2025	1

Table 2 - Technical Data

WIRING DIAGRAM

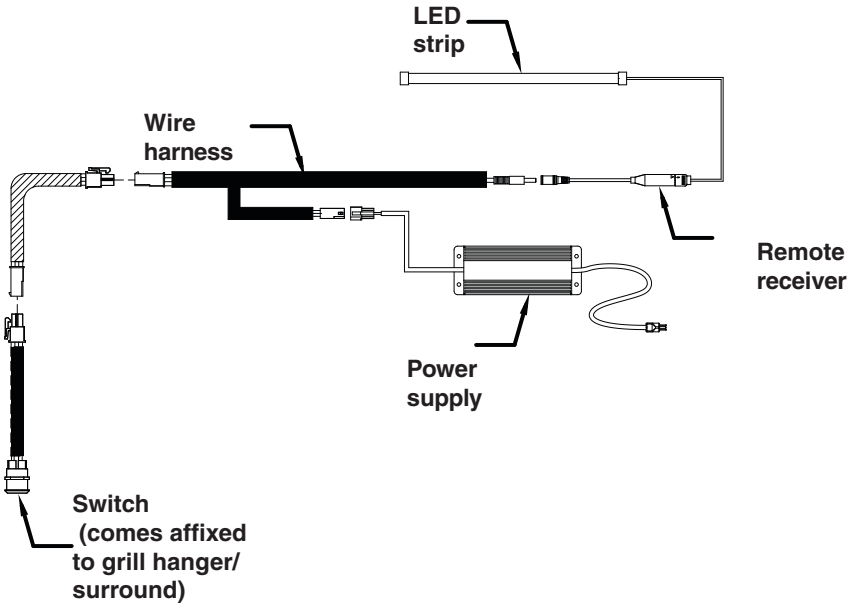

SPECIFICATIONS AND DIMENSIONS (Cont.)

Only the Fire Magic grill and accessories can be used with this island**. Below is a list of the items included with each island model.**

Item		DC250-44XX	DC250-D-44XX
1.	Grill	E250i-1Z1E-DC	E250i-1Z1E-DC
2A.	Double Drawers	53802SC	n/a
2B.	Triple Drawers	n/a	53803SC
3.	Refrigerator	3598-DR	n/a
4.	Island cover †	DC250-5F	DC250-5F

† optional, not shown

Table 3 - Island Options

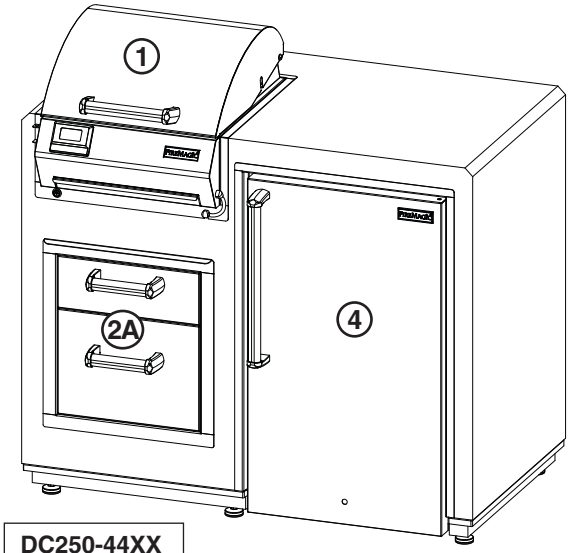

DC250-44XX model shown

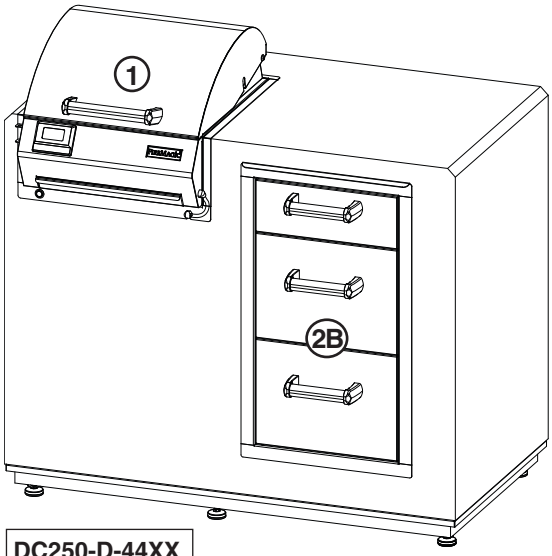

DC250-D-44XX model shown

MINIMUM CLEARANCES

The dimensions shown below are **MINIMUM CLEARANCES** to maintain when you install the island.

ALL CLEARANCES AND INFORMATION STATED HERE MUST BE MAINTAINED AND FOLLOWED.

Note: Refer to the INSTALLATION REQUIREMENTS section found in the grill owner's manual for all details and clearances related to the electric grill.

Description	Dimension
Left side clearance	6"
Right side clearance	0"
Rear clearance	2"
Clearance above unit	30"
Clearance below unit	0"

Table 4 - Minimum Clearances

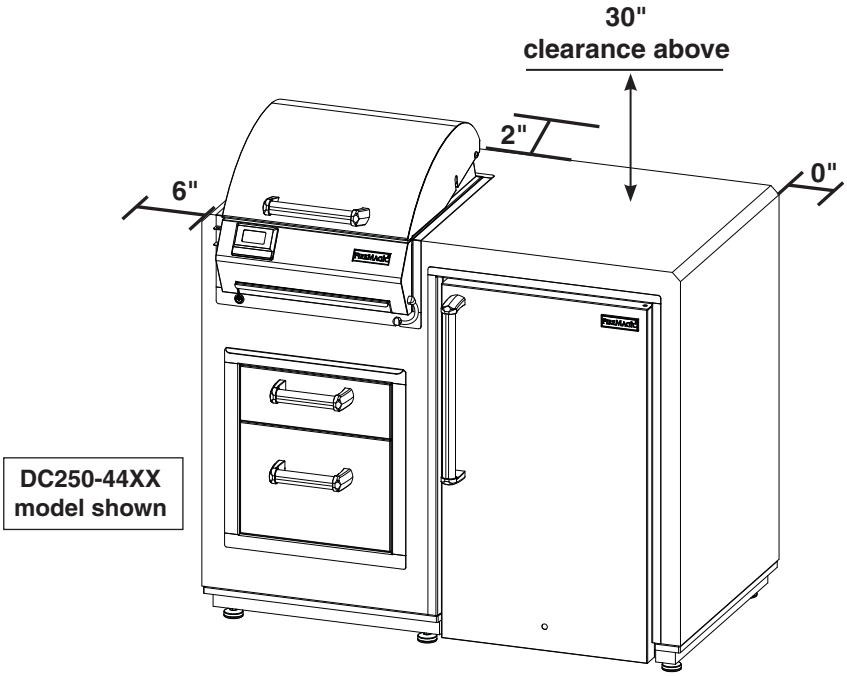

Floor must be a hard, level surface. Combustible materials permitted.

PARTS LIST

LED LIGHTS REPLACEMENT PARTS LIST

Item	Description	Part No.	Qty.
1.	Wire extension	WH-07	1
2.	Power supply	693-701	1
3.	Remote kit (transmitter and receiver)	690-702	1
4.	LED assembly	635-703	1
5.	Wire harness	WH-010	1

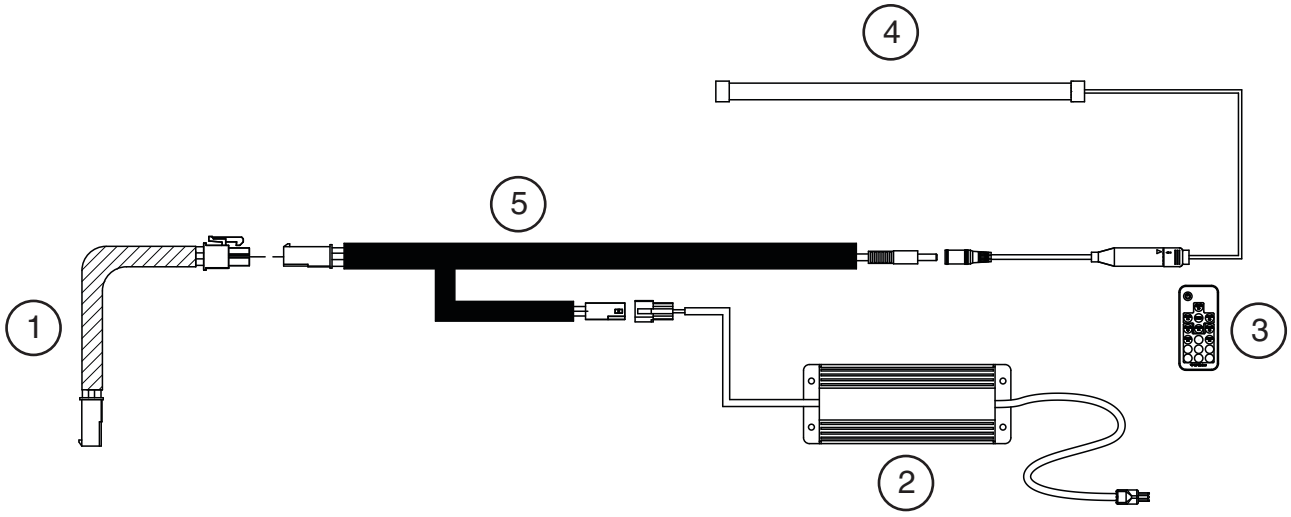

Refer to the electric grill and refrigerator manuals for any replacement parts related to the grill/refrigerator.

Identification Parts List

Item	Description	Qty.
1.	Island	1
2.	Duplex outlet box assy. (DC250-44XX models)	3
or	Duplex outlet box assy. (DC250-D-44XX models)	2
3.	Drawer bracket (w/ hex screw)	4
4.	Leveler bolts	5
5.	Mounting brackets (w/ hardware)	4

- Your island is packaged onto 1 pallet.

IMPORTANT

Remove all packing material (including any protective coatings) and discard prior to use.

COMPONENTS ARE HEAVY HANDLE WITH CARE

DC250-44XX model shown
(design may vary)

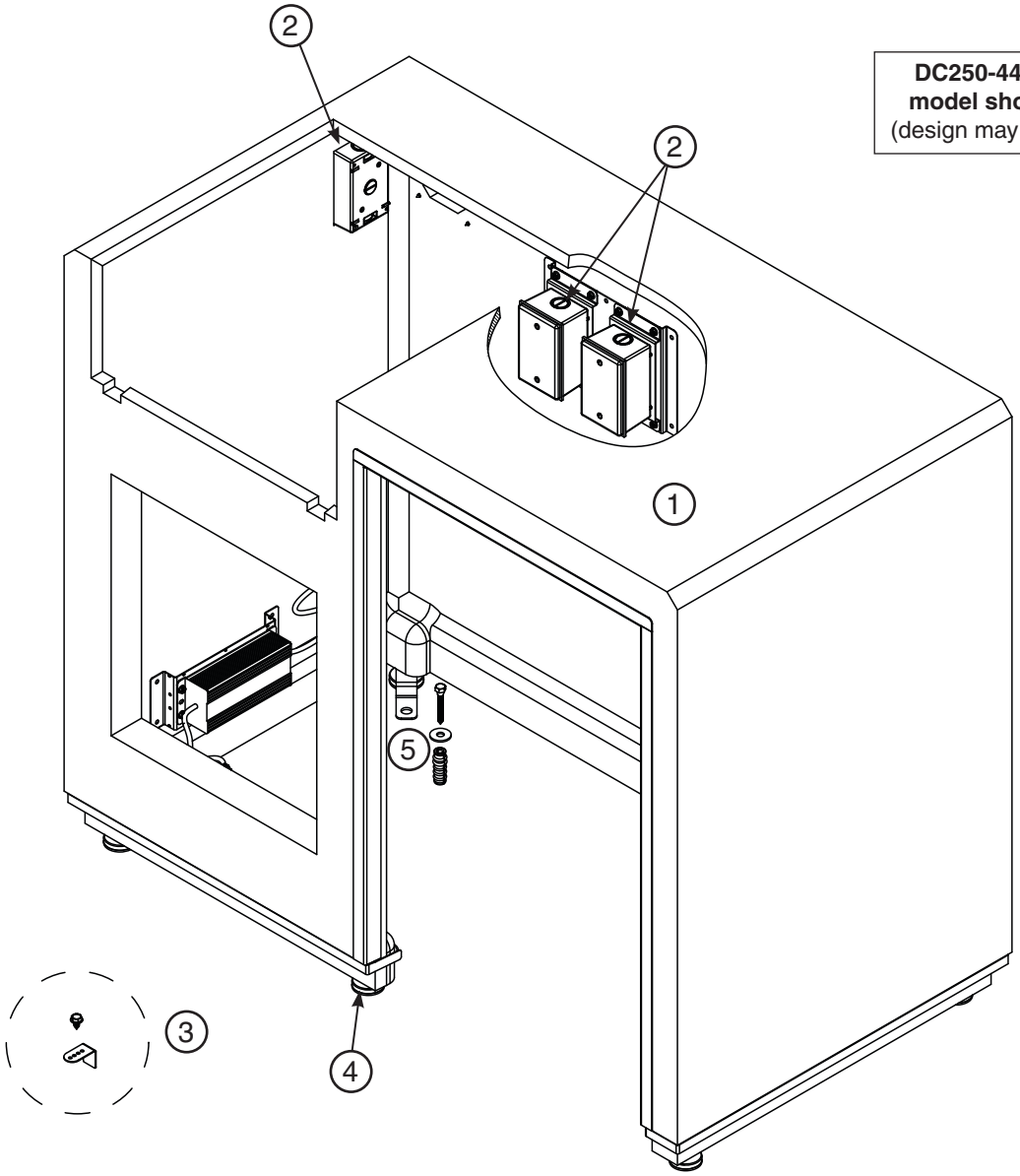

INSTALLATION

WARNING: Failure to position the parts in accordance with these diagrams or failure to use only parts specifically approved with this unit may result in property damage or personal injury.

TOOLS REQUIRED

- $^{7}/_{16}$", $^{1}/_{2}$", $^{9}/_{16}$" open end wrenches
- Power drill with $^{5}/_{16}$" hex driver and #2 Phillips driver
- Level
- Flathead screwdriver

LOCATION

While following all requirements and safety information in the grill owner's manual, determine and prepare the location of the island (a hard and level surface).

Note: A combustible surface is permitted.

Important: The electrical setup must be considered when determining the location of the island. See section below and the grill owner's manuals for details.

HANDLING OF THE UNIT REQUIRES TWO OR MORE PEOPLE.

EXERCISE EXTREME CARE DURING INSTALLATION.

ELECTRICAL SETUP

Have a licensed electrician route the electrical setup for your island. Three outlet boxes are available. See Fig. 7-1 for location details.

Your installation may vary. **Follow all instructions included with the grill and accessories to be installed into this island. Observe the National Electric Code and all local codes.**

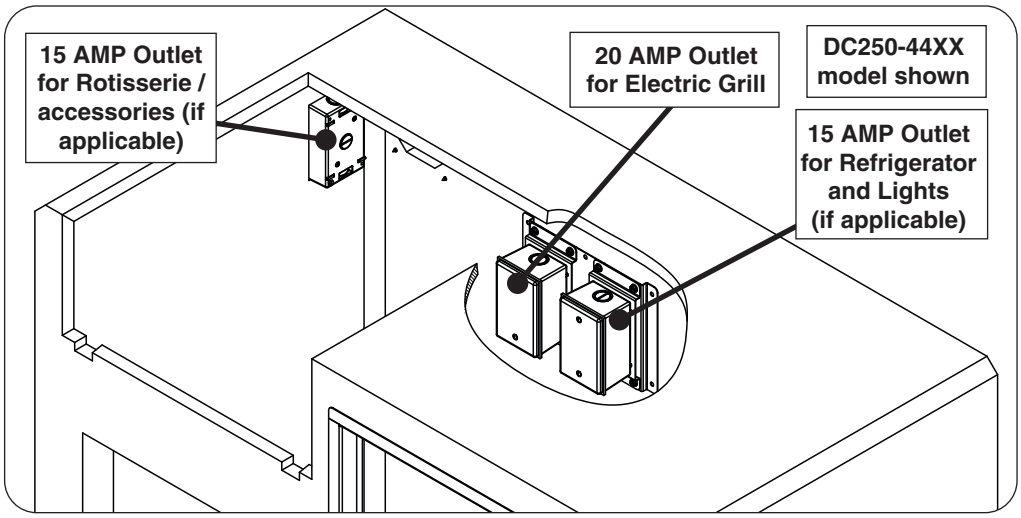

Fig. 7-1 Electrical call outs

PLACE ISLAND

1. **CAREFULLY** place the island in an appropriate location (see Fig. 8-1, and refer back to the LOCATION section if needed).
2. Use the level to ensure the top surface of the island is level. The 5 levelers at the bottom of the island may be adjusted as needed with a $^1/_2$" open end wrench (see Fig. 8-1).
3. Secure the island to the floor using the 4 pre-installed mounting brackets. Use a $^7/_{16}$" open end wrench and the supplied mounting hardware as appropriate. See Fig. 8-2, A.

   Finish by tightening down the brackets. Hold a leveler in place (below bracket) with a $^1/_2$" open end wrench, and tighten the nut (above bracket) using a $^9/_{16}$" open end wrench. See Fig. 8-2, B.

Installation continued on next page

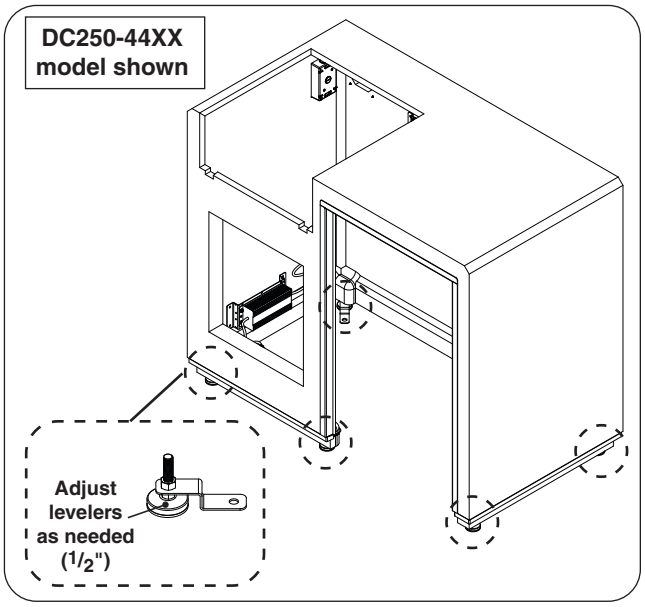

Fig. 8-1 Place and level island

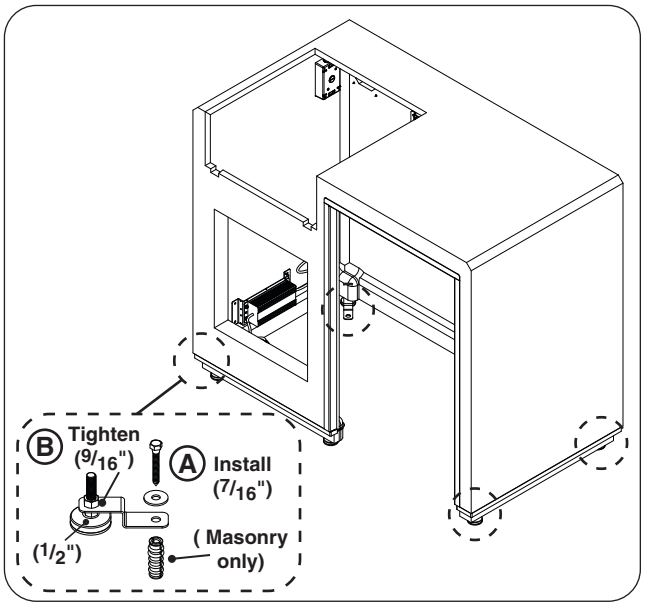

Fig. 8-2 Mount island

INSTALL DRAWERS

The drawers are bundled with your island. Review the instructions provided with your accessories.

Brackets are provided for ease of installation in this island. Follow the steps below.

1. Remove the drawers. See Fig. 9-1. (Refer to the instructions provided with the drawer if needed.)
2. Insert your unit completely into the appropriate opening. Ensure it is flush against the exterior wall (see Fig. 9-1 and Fig. 9-2, step 2).
3. The drawer will have 2 round holes on both the top and bottom of its frame. Reach from within the island and insert a bracket where a hole exists, **below the frame**. See Fig. 9-2, step 3.
4. While squeezing the rear of the bracket and the front of the drawer frame **firmly** against the concrete wall, insert a hex screw and tighten with the power drill and 5/16" hex driver (see Fig. 9-2, step 4). DO NOT OVERTIGHTEN.

Note: Installation may require a second person to hold the bracket against the concrete wall from within the island enclosure.

5. Repeat this process for the remaining brackets.

Note: Only the holes in the top and bottom of the frame require brackets.

Installation continued on next page

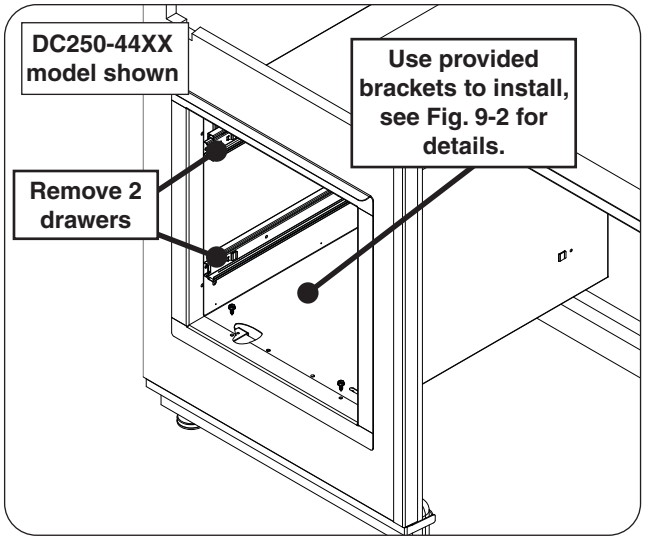

Fig. 9-1 Install drawer

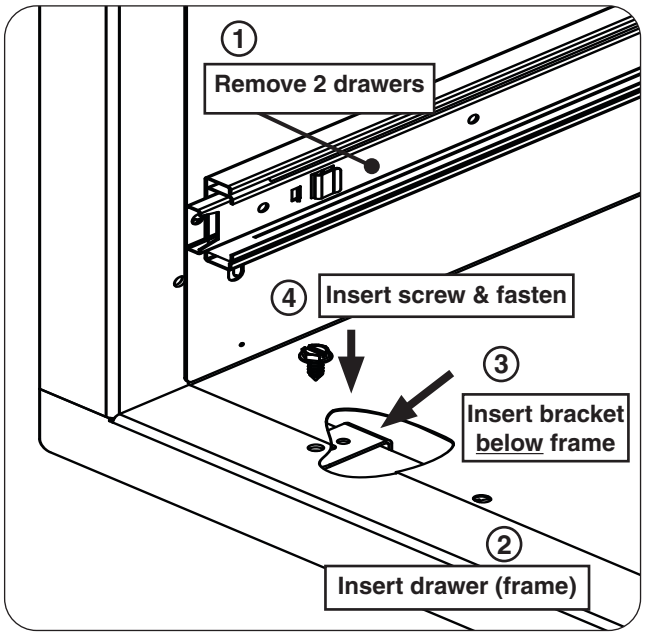

Fig. 9-2 Install drawer detail

INSTALL GRILL

The grill is bundled with your island. Follow all applicable instructions provided with your grill for installation.

In addition to all information found in the owner's manual, make the wire connection and plug the grill power supply cord into the **20 AMP** outlet. Then carefully lower the grill into place. See Fig 10-1.

Important: **Ensure the electrical connections/wires are clear and undamaged, and that the grill is correctly inserted without any obstructions between it and the island. It must sit flat and the connection/wires must rest in the cutouts. DO NOT pinch any connections/ wires. Handle with care.**

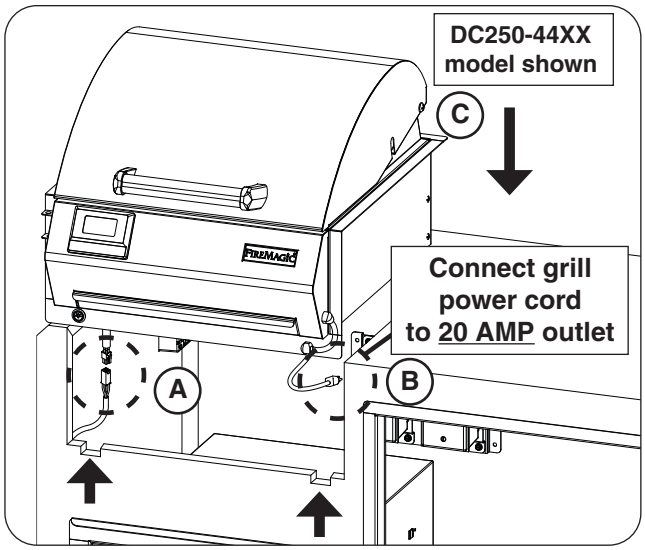

Fig. 10-1 Install grill

CONNECT POWER SUPPLY CORD

Route the cord coming from the power supply to the **15 AMP** outlet, and connect (see Fig 10-2).

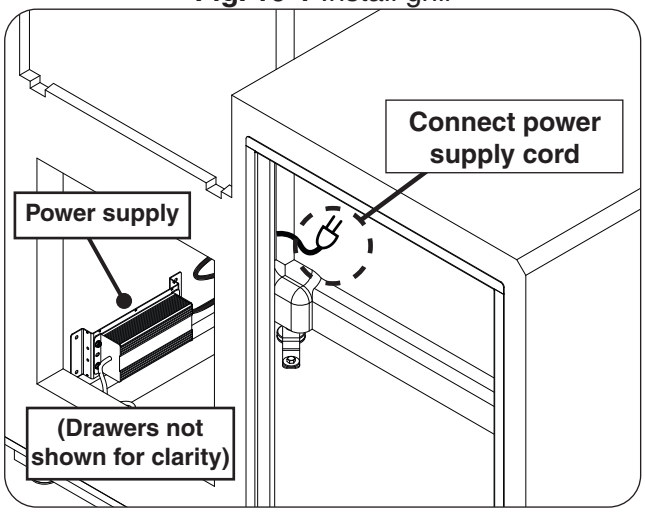

Fig. 10-2 Connect power supply

INSTALL REFRIGERATOR (if applicable)

The refrigerator is bundled with your island. Follow all instructions provided with your accessory.

In addition to all information found in the owner's manual, plug the refrigerator power supply cord into the **15 AMP** outlet and slide the refrigerator into place (see Fig 10-3).

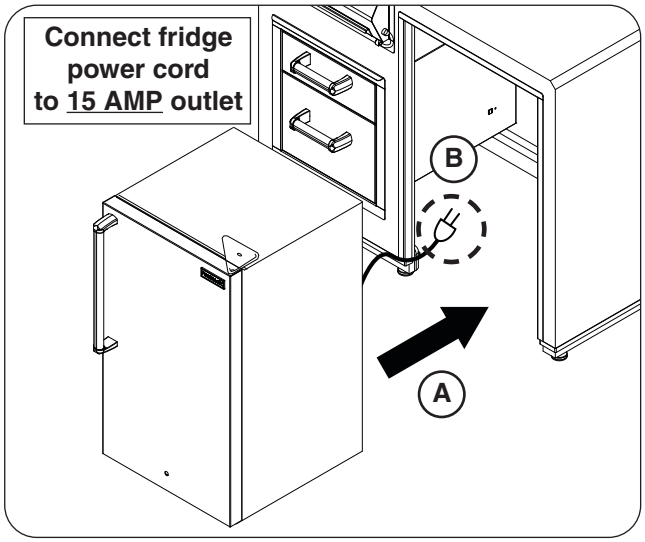

Fig. 10-3 Install refrigerator

ELECTRICAL TEST

Perform an electrical test and check that the grill, LED lights, and refrigerator (if applicable) function properly (see operation section in this manual, and the instructions provided with your refrigerator and/or grill). If units do not function check all connections. If a problem persists, contact a professional service technician.

LED LIGHTS - REMOTE OPERATION

Your unit comes with a remote to control the LED light system.

ORIENTATION

Prior to remote transmitter use, familiarize yourself with the transmitter keys as illustrated in Fig. 11-1 and Fig. 11-2.

The remote has two modes:

DYNAMIC MODE: 22 effects that range between fade, strobe, blasting flash, flicker, and alternating color patterns.

STATIC MODE: 20 standing color options (no effects).

Identify the transmitter keys:

1) **POWER KEY:** Turns light system on or off.

   This key (and the entire remote) only works when the light switch located below the grill's drip tray is in the ON position. See Fig. 11-3.

2/9) **DYNAMIC MODE KEYS:** Switch to dynamic mode, and switch between dynamic effects (1-22).

3/10) **DYNAMIC SPEED KEYS:** Switch to dynamic mode, and decrease/increase playing speed (1-8 levels).

4/5) **STATIC COLOR KEYS:** Switch to static mode, and switch between standing colors (1-20).

6) **DIRECT COLOR KEYS:** Shortcut keys to main (static) colors.

7/8) **STATIC BRIGHTNESS KEYS:** Switch to static mode, and decrease/increase brightness (1-8 levels).

11) **DEMO KEY:** Switch/reset to dynamic mode #1.

REMOTE USE

1. Push the light switch (below grill's drip tray) to the ON position. The light switch will light up when on. See Fig. 11-3.

Note: The light system will turn on or remain off at this time depending on the last setting the remote transmitter was in. (Light system always retains memory of all remote transmitter settings.)

The remote only works when the light switch is in the ON position.

2. Press the **POWER** key on the remote transmitter to turn the light on or off (see Fig. 11-1).
3. Use the remote as desired. Reference the above section and Fig. 11-1 and 11-2.

SHUTTING DOWN

- **For a remote shutdown,** press the **POWER** key on the remote transmitter.
- **For a manual shutdown,** the light switch (below grill's drip tray) to the OFF position. (The light switch will no longer be lit up.)

REMOTE STORAGE AND CARE

When not in use, store the remote transmitter in a safe location.

Important: **Remote is NOT weatherproof.** Protect it from the elements at all times and store when not in use.

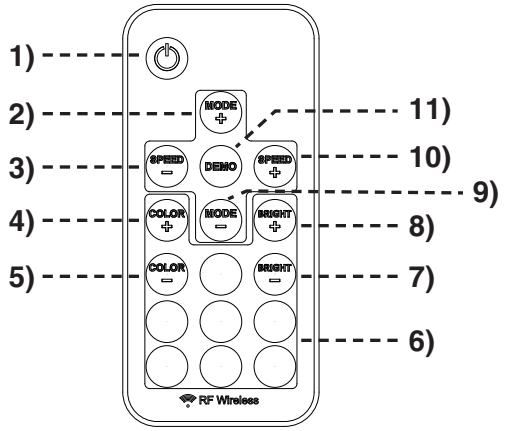

Fig. 11-1 Remote transmitter detail

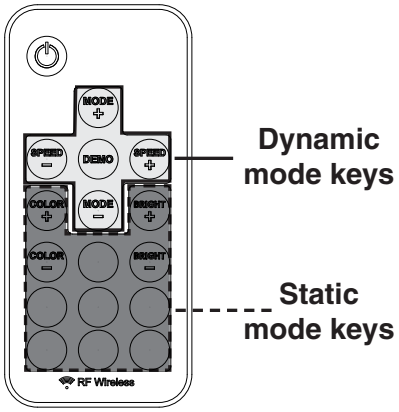

Fig. 11-2 Remote transmitter modes detail

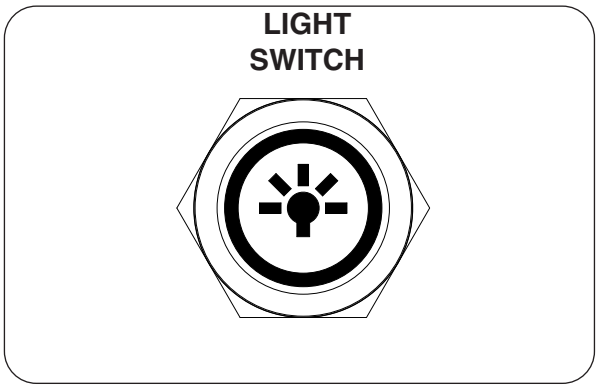

Fig. 11-3 Light switch

CARE AND CLEANING

- **Keep the vent openings and surrounding area of the of the island clear and free at all times.**
- For grill and accessory care and cleaning, refer to the owner's manuals provided with the units.

CONCRETE COMPONENTS

As with any surface, concrete components require regular maintenance and care. Certain guidelines must be followed to preserve the concrete's appearance and structural integrity.

- Use trivets to protect your countertop from high-heat.
- **Scratches may occur due to usage.** To minimize, avoid striking or dragging heavy, rough, or sharp objects across the countertop. Use a cutting board when using knives.
- **Spotting and hairline cracks may occur due to the nature of the product and are not considered a manufacturing defect.**
- **Concrete products are porous and susceptible to discoloration from liquids (especially oils and acidic substances).** During use, clean up any spills immediately to prevent any possible staining or damage to the finish. Avoid allowing water (or any liquid / substance) to stand on the surface. Using coasters for drinks is highly recommended.
- After each use, clean up any food particles or debris.
- **To clean the concrete, first wash with a mild soap and water solution. For stubborn stains, a vinyl brush may be used. Allow to dry. Annually, follow up with a masonry sealer in order to preserve the finish.**
- It should be noted that, like natural stone, concrete products will develop a patina when left outside. No two concrete products are identically the same and the finish will vary.
- **An optional fabric cover is available to protect you island bundle when cool and not in use.** Contact you local dealer for ordering information.

BATTERY INSTALLATION/REPLACEMENT

The remote transmitter requires one lithium battery (3V/CR2025) to operate (included). Locate the transmitter, remove the tray (found at bottom), and properly insert the new battery as shown. Re-secure the tray. See Fig. 12-1.

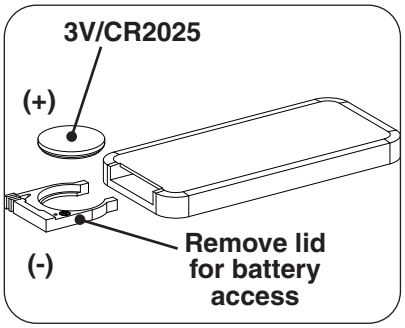

Fig. 12-1 Transmitter battery

IMPORTANT

IN THE EVENT OF A GREASE FIRE, IMMEDIATELY TURN OFF THE POWER AT THE SOURCE. KEEP THE LID OPEN AND ALLOW THE FIRE TO EXTINGUISH ITSELF. A THOROUGH INSPECTION BY A TRAINED SERVICE TECHNICIAN SHOULD BE CONDUCTED BEFORE FUTURE USE OF YOUR UNIT. THE SERVICE TECHNICIAN WILL CHECK ALL ELECTRICAL WIRING FOR DAMAGE. ALL WIRING MUST BE REPAIRED PRIOR TO FUTURE USE.

TROUBLESHOOTING

If you have trouble with your LED lights, please use this list to identify the problem. By trying one or more of the solutions to the probable cause, you should be able to solve the problem. If this list does not address your present problem, or if you have other technical difficulties with your unit, please contact your local dealer or visit our web site at *www.rhpeterson.com*.

For all other troubleshooting, refer to the owner's manuals provided with your grill and accessories.

SYMPTOM	PROBABLE CAUSE	CORRECTIVE ACTION
LED Lights will not turn on with light switch	**1.** Remote transmitter is in off setting **2.** Loose wires **3.** Appliance is not receiving power **4.** Power supply failure	**1.** Press POWER key on the remote transmitter. **2.** Check all wires are connected properly. **3.** Check that power supply cord is properly plugged in. Check GFCI. Check building circuit breaker. **4.** Check/replace power supply.
LED lights will not turn on, off, or function using remote transmitter	**1.** Light switch is in OFF position **2.** Transmitter battery dead **3.** Loose wires **4.** Appliance is not receiving power **5.** Power supply failure **6.** Transmitter malfunction/ damaged **7.** Receiver malfunction/ damaged	**1.** Push light switch in to ON position, then use remote. **2.** Check/replace battery in transmitter (see BATTERY REPLACEMENT section). **3.** Check all wires are connected properly. **4.** Check that power supply cord is properly plugged in. Check GFCI. Check building circuit breaker. **5.** Check/replace power supply. **6.** Replace remote transmitter. **7.** Replace remote transmitter.

NOTES PAGE

Please use this page to record any information that you may want to have at hand.