FIREMAGIC

WALL VENT HOOD

For Outdoor Use Only
36-VH, 42-VH, 48-VH and 60-VH series

42-VH-7 model shown

INSTALLATION INSTRUCTIONS AND OWNER'S MANUAL

INSTALLER: Leave these instructions with consumer.
CONSUMER: Retain for future reference.

This vent hood is for outdoor, wall mount installation only.

Important: READ THESE INSTRUCTIONS CAREFULLY BEFORE STARTING INSTALLATION OR USE.

WARNINGS AND SAFETY CODES

⚠ CAUTION:

- **This vent hood is for outdoor, wall mount installation only.**
- For General Ventilating Use Only. Do Not Use To Exhaust Hazardous Or Explosive Materials And Vapors!
- Observe all local codes and ordinances when installing this appliance. If no local codes are applicable, wire unit in accordance with the latest National Electrical Code, ANSI/NFPA 70, or the Canadian Electrical Code, CSA C22.1, whichever is applicable.

⚠ DANGER:

IF YOU SMELL GAS:

1. Shut off the gas to the grill this vent hood is installed above.
2. Extinguish any open flame.
3. Open the lid of the grill.
4. If odor continues, keep away from the appliances and ***immediately*** call your gas supplier or the fire department.

⚠ WARNING:

To avoid the risk of property damage and/or personal injury, installation work and electrical wiring must be performed by a qualified professional installer. This appliance must be installed in accordance with this instruction.

⚠ WARNING:

1. Do not store or use gasoline or other flammable vapors and liquids in the vicinity of the gas grill this vent hood is installed above, or any other appliance.
2. An LP cylinder not connected for use shall not be stored in the vicinity of the gas grill this vent hood is installed above, or any other appliance.

⚠ WARNING:

Improper installation, adjustment, alteration, service, or maintenance can cause injury or property damage. For proper installation, refer to the installation instructions. For assistance or additional information, consult a qualified professional service technician or service agency.

All electrical outlets in the vicinity of the grill and vent hood must be properly grounded in accordance with local codes, or, in the absence of local codes, with the National Electrical Code, ANSI/NFPA 70, or the Canadian Electrical Code, CSA C22.1, whichever is applicable.

Keep all electrical-supply cords and fuel-supply hoses away from any heated surface.

PFS® C US

Certified to: ANSI Z21.58b
CSA 1.6b

FIREMAGIC®

INSTRUCTIONS D'INSTALLATION ET MANUEL DU PROPRIÉTAIRE

CAPOT DE PASSAGE DE MUR
Pour l'usage extérieur seulement
36-VH, 42-VH, 48-VH, and 60-VH série

IMPORTANT: LISEZ CES INSTRUCTIONS SOIGNEUSEMENT AVANT DE COMMENCER L'INSTALLATION OU L'UTILISATION

INSTALLATEUR: **Laissez ces instructions avec le consommateur.**

CONSOMMATEUR: **Maintenez pour la future référence.**

Ce capot de passage est pour extérieur, installation de bâti de mur seulement.

AVERTISSEMENTS ET CODES DE SÛRETÉ

⚠ ATTENTION:

- **Ce capot de passage est pour extérieur, installation de bâti de mur seulement.**
- Pour l'usage de aération général seulement. N'employez pas pour épuiser les matériaux dangereux ou explosifs et les vapeurs!
- Observez tous les codes locaux et ordonnances en installant cet appareil. Si aucun code local ne s'applique, unité de fil selon le plus défunt code électrique national, ANSI/NFPA 70, ou le code électrique canadien, CSA C22.1, celui qui s'applique.

⚠ DANGER:

SI VOUS SENTEZ LE GAZ:

1. Coupez le gaz au gril que ce capot de passage est installé ci-dessus.
2. Éteignez-vous n'importe quelle flamme nue.
3. Ouvrez le couvercle du gril.
4. Si l'odeur continue, gardez à partir des appareils et appelez immédiatement votre fournisseur de gaz ou les corps de sapeurs-pompierssupplier or the fire department.

⚠ AVERTISSEMENT:

Pour éviter le risque de dégats matériels et/ou de dommage corporel, le travail d'installation et le câblage électrique doivent être exécutés par un installateur professionnel qualifié. Cet appareil doit être installé selon cette instruction.

⚠ AVERTISSEMENT:

1. Ne stockez pas ou employer l'essence ou d'autres vapeurs et liquides inflammables à proximité du gaz grillez ce capot de passage est installé ci-dessus, ou n'importe quel autre appareil.
2. Un cylindre de LP non relié pour l'usage ne sera stocké à proximité du gril de gaz que ce capot de passage est installé ci-dessus, ou d'aucun autre appareil.

⚠ AVERTISSEMENT:

L'installation, l'ajustement, le changement, le service, ou l'entretien inexact peuvent causer des dommages ou des dégats matériels. Pour l'installation appropriée, référez-vous aux instructions d'installation. Pour l'aide ou les informations supplémentaires, consultez un technicien professionnel qualifié de service ou une agence de service professionnel qualifié.

Toutes les sorties électriques à proximité du capot de gril et de passage doivent être correctement fondues selon des codes locaux, ou, en l'absence des codes locaux, avec le code électrique national, ANSI/NFPA 70, ou le code électrique canadien, CSA C22.1, celui qui s'applique.

Maintenez tout électrique-fournissent des cordes et carburant-fournissent des tuyaux à partir de n'importe quelle surface heated.

PFS® C US

Certified to: **ANSI Z21.58b**
CSA 1.6b

CONTENTS

GETTING STARTED

IMPORTANT PRE-INSTALLATION AND SAFETY INFORMATION 5
SPECIFICATIONS AND DIMENSIONS 6
ELECTRICAL SAFETY 6
TOOLS REQUIRED 7
VENT HOOD REPLACEMENT PARTS LIST 8
INSTALLATION REQUIREMENTS - FIRE MAGIC SPACER & DUCT COVER 9
INSTALLATION REQUIREMENTS - CUSTOM SPACER & SOFFIT 10

INSTALLATION

INSTALLATION 12
REMOVE BAFFLE AND MOUNTING BRACKET 12
INSTALL SPACER 12
INSTALL TRANSITION 14
INSTALL MOUNTING BRACKET (custom spacer only) 14
MOUNT VENT HOOD 15
INSTALL VENT PIPING 16
INSTALL FAN ASSEMBLY 17
CONNECT WIRING 17
INSTALL ELECTRICAL 18
INSTALL DUCT COVER/CUSTOM SOFFIT (if applicable) 19
INSTALL BAFFLE 20
INSTALL GREASE FILTERS 20

USE, CARE, & SERVICE

OPERATION 21
VENT HOOD FANS 21
GRILL TOP LIGHTING 21
SERVICING AND CLEANING 23
CLEANING YOUR VENT HOOD 23
FIRE MAGIC DUCT COVER REMOVAL (if applicable) 24
REPLACING HALOGEN BULBS 24
TROUBLESHOOTING 25
WARRANTY 26

L'INFORMATION IMPORTANTE DE PRÉINSTALLATION ET DE SÛRETÉ

AVERTISSEMENT!

1. **Lisez toutes les instructions.**
2. **CE CAPOT DE PASSAGE EST POUR EXTÉRIEUR, INSTALLATION DE BÂTI DE MUR SEULEMENT. Extérieur est défini comme secteur qui a l'air illimité, s'ouvrent aux éléments à tout moment. Un mur est défini comme côté d'un plancher et d'un toit se reliants de bâtiment.**
3. **L'installation, le service, et la réparation doivent être faits par un technicien qualifié de service professionnel.**
4. Cette hotte est à utiliser avec un gril à gaz seulement. Il n'est pas recommandé pour une utilisation avec un gril à charbon (en raison de la production de chaleur plus élevé qui peut causer des dommages à la hotte).
5. Le capot de passage et le gril de gaz ne sont pas prévus pour être installés dans ou sur des bateaux ou des camping-cars.
6. Pour se protéger contre la décharge électrique, n'immergez pas la corde ou ne branchez pas l'eau ou tout autre liquide.
7. Débranchez de la sortie si non utilisable et avant le nettoyage. Laissez se refroidir avant de mettre dessus ou enlever des pièces.
8. N'actionnez aucun appareil avec une corde endommagée, prise, ou après les défauts de fonctionnement d'appareils ou avez été endommagé de toute façon. Entrez en contact avec le fabricant pour la réparation.
9. Ne laissez pas la corde toucher les surfaces chaudes.
10. Ne pas utiliser un appareil extérieur à des fins autres que prévu.
11. Lors de la connexion, branchez la fiche de l'appareil extérieur, puis brancher l'appareil dans la prise.
12. Cet appareil doit être fondu. En cas d'un court-circuit électrique, fondre réduit le risque de décharge électrique en fournissant un fil d'évasion pour le courant électrique. Cet appareil equipeed avec une corde ayant un fil fondé avec une prise fondante. La prise doit être branchée à une sortie qui est correctement installée et fondue.
13. **Utilisez uniquement un correctement câblé et inspecté 120VAC (15 AMP minimum) disjoncteur (GFCI) <u>TERRE</u> 3 fils récipient (non inclus) avec cet appareil en plein air.**
14. N'enlevez jamais la prise fondante ou l'employez avec un adapteur de 2 fourches.
15. Ne pas utiliser une rallonge. Si le cordon d'alimentation est trop court, demandez à un électricien qualifié d'installer une prise près de l'appareil.
16. Quand la coupure ou le forage dans un mur ou un plafond, n'endommagent pas le câblage électrique et d'autres utilités cachées.
17. Des ventilateurs canalisés doivent toujours être exhalés à l'extérieur.
18. **AVERTISSEMENT :** Pour réduire le risque du feu, employez seulement la canalisation en métal.
19. **AVERTISSEMENT :** Pour réduire le risque d'un dessus de gamme graissez le feu:
    - **a.** Ne laissez jamais les unités extérieures sans surveillance aux arrangements élevés. Tabagisme de cause de Boilovers et débordements graisseux qui peuvent mettre à feu. Chauffez les huiles lentement sur de bas ou moyens arrangements.
    - **b.** Toujours mettre la hotte au réglage HI lors de la cuisson à feu vif ou que vous cuisinez des mets flambés.
    - **c.** Nettoyez les ventilateurs d'aération fréquemment. On ne devrait pas permettre à la graisse de s'accumuler sur le ventilateur ou le filtre.
    - **d.** Employez la taille appropriée de casserole. Employez toujours le cookware approprié pour la taille de la surface à cuire.
20. **LES COUDES 90˚ NE SONT PAS RECOMMANDÉS POUR CETTE INSTALLATION. LES CAPS DE RESILIATION RESTRICTIVE NE SONT PAS RECOMMANDES POUR CETTE INSTALLATION. La tuyauterie de passage devrait être installée aussi directement comme possible d'empêcher la contre-pression sur les ventilateurs. Mettez en référence la section SIFFLANTE de PASSAGE de ce manuel pour des détails.**
21. L'installation d'un solin ou d'un coupe-feu peut être nécessaire. Suivez les dégagements indiqués par le fabricant de votre tuyau de ventilation.

SAUF CES INSTRUCTIONS

IMPORTANT PRE-INSTALLATION AND SAFETY INFORMATION

WARNING!

1. **Read all instructions.**
2. **THIS VENT HOOD IS FOR OUTDOOR, WALL MOUNT INSTALLATION ONLY. Outdoor is defined as an area that has unconfined air, open to the elements at all times. A wall is defined as a side of a building connecting floor and roof.**
3. **Installation, service, and repair must be done by a qualified professional service technician.**
4. This vent hood is for use with a gas grill only. It is not recommended for use with a charcoal grill (due to higher heat output that may cause damage to the vent hood).
5. The vent hood and the gas grill are not intended to be installed in or on boats or recreational vehicles.
6. To protect against electric shock, do not immerse cord or plugs in water or other liquid.
7. Unplug from the outlet when not in use and before cleaning. Allow to cool before putting on or taking off parts.
8. Do not operate any appliance with a damaged cord, plug, or after the appliance malfunctions or has been damaged in any manner. Contact the manufacturer for repair.
9. Do not let the cord touch hot surfaces.
10. Do not use an outdoor appliance for purposes other than intended.
11. When connecting, first connect plug to the outdoor appliance, then plug appliance into the outlet.
12. This appliance must be grounded. In the event of an electrical short circuit, grounding reduces the risk of electric shock by providing an escape wire for the electric current. This appliance is equipped with a cord having a grounded wire with a grounding plug. The plug must be plugged into an outlet that is properly installed and grounded.
13. **Use only a properly wired and inspected 120VAC GFCI (RCD)(15 AMP minimum) Ground Fault Circuit Interrupter (GFCI) <u>GROUNDED</u> 3-wire receptacle (not included) with this outdoor appliance.**
14. Never remove the grounding plug or use with an adapter of 2 prongs.
15. Do not use an extension cord. If the power cord is too short, have a qualified electrician install an outlet near the appliance.
16. When cutting or drilling into a wall or roof, do not damage electrical wiring and other hidden utilities.
17. Ducted fans must always be vented to the outdoors.
18. **WARNING:** To reduce the risk of fire, use only metal ductwork.
19. **WARNING:** To reduce the risk of a range top grease fire:
    - **a.** Never leave surface units unattended at high settings. Boilovers cause smoking and greasy spillovers that may ignite. Heat oils slowly on low or medium settings.
    - **b.** Always turn hood to HI Setting when cooking at high heat or when cooking flaming foods.
    - **c.** Clean ventilating fans frequently. Grease should not be allowed to accumulate on fan or filter.
    - **d.** Use proper pan size. Always use cookware appropriate for the size of the cooking surface.
20. **90˚ ELBOWS ARE NOT RECOMMENDED FOR THIS INSTALLATION. RESTRICTIVE TERMINATION CAPS ARE NOT RECOMMENDED FOR THIS INSTALLATION. Vent piping should be installed as straight as possible to prevent back-pressure on the fans. Reference the VENT PIPING section of this manual for details.**
21. Installation of a flashing or firestop may be required. Follow your vent pipe manufacturer listed clearances.

SAVE THESE INSTRUCTIONS

ELECTRICAL SAFETY

To protect against electric shock, do not immerse cord or plugs in water or other liquid.

Unplug from the outlet when not in use and before cleaning. Allow to cool before putting on or taking off parts.

Do not operate any outdoor appliance with a damaged cord, plug, or after the appliance malfunctions or has been damaged in any manner. Contact the manufacturer for repair.

Do not let the cord touch hot surfaces.

Do not use an outdoor appliance for purposes other than intended.

When connecting, first make wire connections then plug appliance into the outlet.

Use only a properly wired and inspected 120VAC GFCI (RCD)(15 AMP minimum) GFCI GROUNDED 3-wire receptacle with this outdoor appliance.

Never remove the grounding plug or use with an adapter of 2 prongs.

The provisions of the National Electric Code as well as any local codes must be observed when installing the product.

SPECIFICATIONS AND DIMENSIONS

Specification	36-VH series Value	42-VH series Value	48-VH series Value	60-VH series Value
A. Unit height *	18"	18"	18"	18"
B. Unit width	36"	42"	48"	60"
C. Unit depth **	30"	30"	30"	30"
D. Transition height	10"	10"	10"	10"
E. Transition width	21 3/4"	21 3/4"	21 3/4"	21 3/4"
F. Transition depth	9"	9"	9"	9"
G. Transition diameter	10"	10"	10"	10"

* Height is of vent hood only (not accounting for 10" transition, if applicable).

** Depth is of vent hood only (not accounting for 10" transition, if applicable).

Table 1 - Product Dimensions

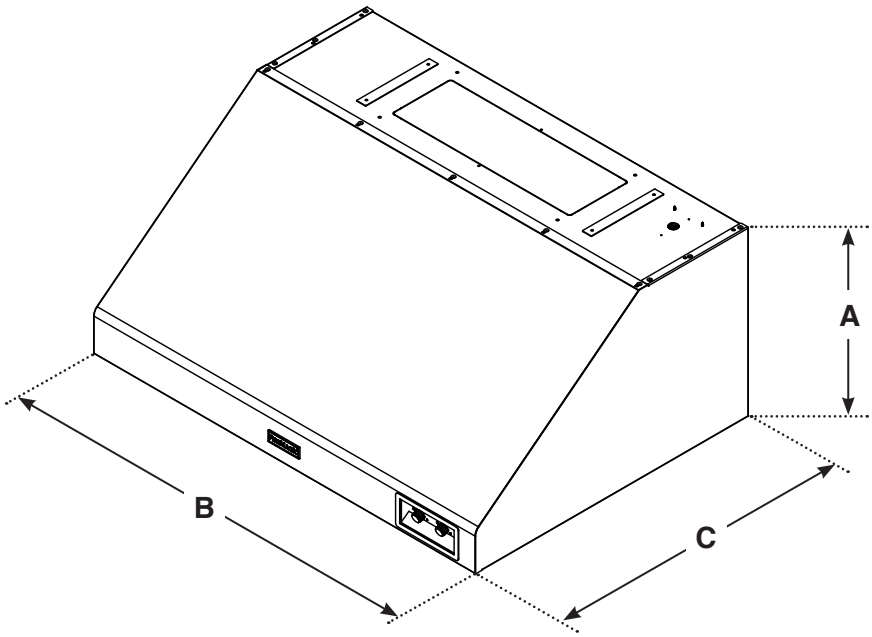

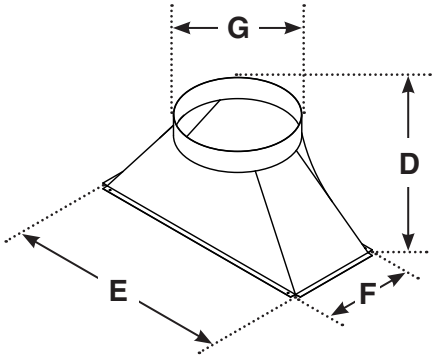

SPECIFICATIONS AND DIMENSIONS (cont.)

Specification	Value
Input electrical requirements	**120VAC / 15 AMP minimum / 60 Hz / GFCI outlet**
Fans	120 volts, 1200 CFM High Pressure Output
Power consumption	1,010 watts
Halogen lights rating	**120V / 50 watt** halogen light bulb
Fire Magic duct cover model # (not included)	(36,42,48,60)-VH-7-DC
Fire Magic spacer model # (not included)	(36,42,48,60)-VH-7-02

Vent Hood Model	Designed For Use With Grills:
36-VH series	up to (A,C)540
42-VH series	up to (A,E)660
48-VH series	up to (A,E)790
60-VH series	up to E1060

Table 2 - Product Specifications

The unit serial identification number and rating label are located on the inside of the hood near the control knobs. To view, the grease filter on the far right of the unit must be removed.

WIRING DIAGRAM

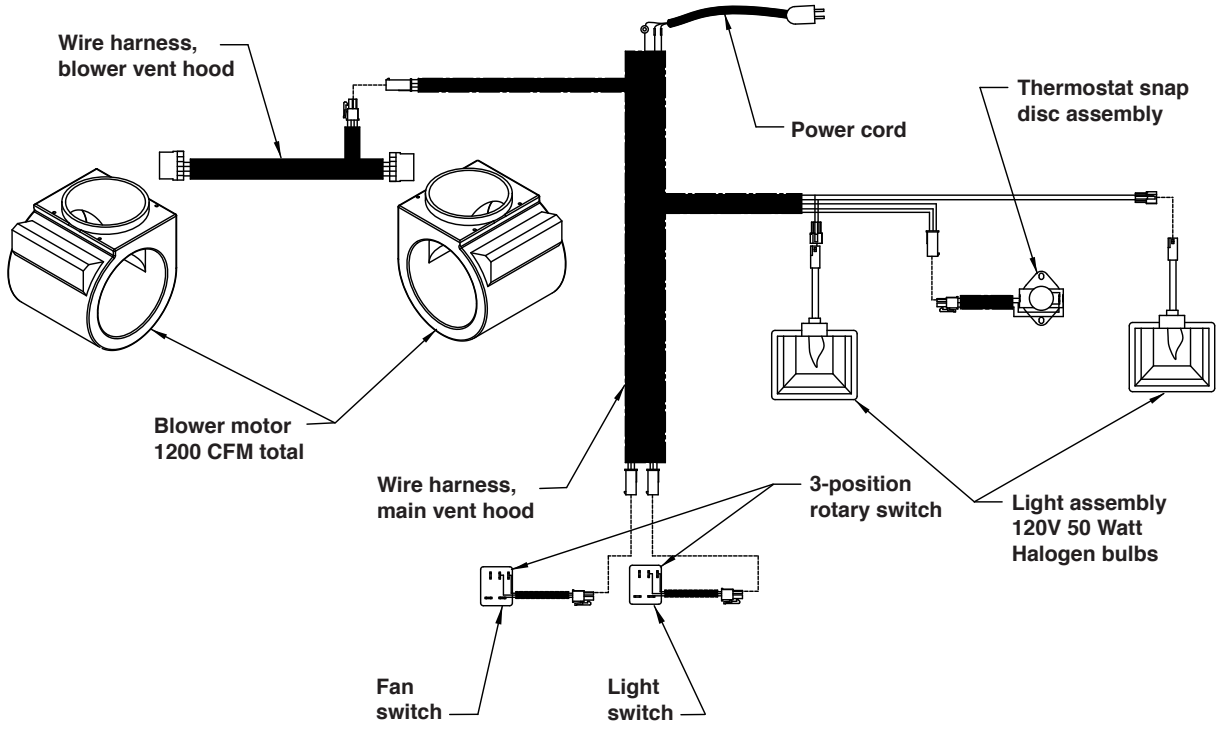

TOOLS REQUIRED

The following are the minimum tools required for the installation of your vent hood components. Additional tools may be required for your individual installation.

- 2 installers recommended
- Proper personal safety equipment
- Appropriate tools for electrical install
- Power drill
- Drill bit - Phillips head
- Medium Phillips screwdriver
- 3/8" nut driver
- 1/4" nut driver or 1/4" hex driver (drill bit)
- Measuring tape
- Level
- Duct tape
- 100% Silicone sealant

VENT HOOD REPLACEMENT PARTS LIST

Item	Description	36-VH-7 Part No.	Qty.	42-VH-7 Part No.	Qty.	48-VH-7 Part No.	Qty.	60-VH-7 Part No.	Qty.
1.	Transition	VH-11	1	VH-11	1	VH-11	1	VH-11	1
2.	Mounting bracket	VH-17-7	1	VH-19-7	1	VH-22-7	1	VH-21-7	1
3.	Complete vent hood assembly	VH-36-01-7	1	VH-42-01-7	1	VH-48-01-7	1	VH-60-01-7	1
4.	Light assembly*	VH-12-6	2	VH-12-6	2	VH-12-6	2	VH-12-6	2
5.	**120V / 50 watt** halogen light bulb*	VH-23	2	VH-23	2	VH-23	2	VH-23	2
6.	Light lens*	24187-26	2	24187-26	2	24187-26	2	24187-26	2
7.	Control switch*	VH-25	2	VH-25	2	VH-25	2	VH-25	2
8.	Control knob	VH-26	2	VH-26	2	VH-26	2	VH-26	2
9.	Complete fan assembly	VHF-1200-7	1	VHF-1200-7	1	VHF-1200-7	1	VHF-1200-7	1
10.	Baffle	VH-36-04	1	VH-42-04	1	VH-48-04	1	VH-60-04	1
11.	Grease filter (set of 4 or 6)	VH-16-4	1	VH-18-4	1	VH-15-4	1	VH-18-6	1
12.	Filter spacer (42" models only)	n/a		VH-42-03-06	2	n/a		n/a	
13.	Vent hood wire harness*	VH-27	1	VH-27	1	VH-27	1	VH-27	1
14.	Thermal switch*	VH-28	1	VH-28	1	VH-28	1	VH-28	1

* Not shown

Replacement parts can be ordered from your local Fire Magic® dealer.

42-VH-7 model shown

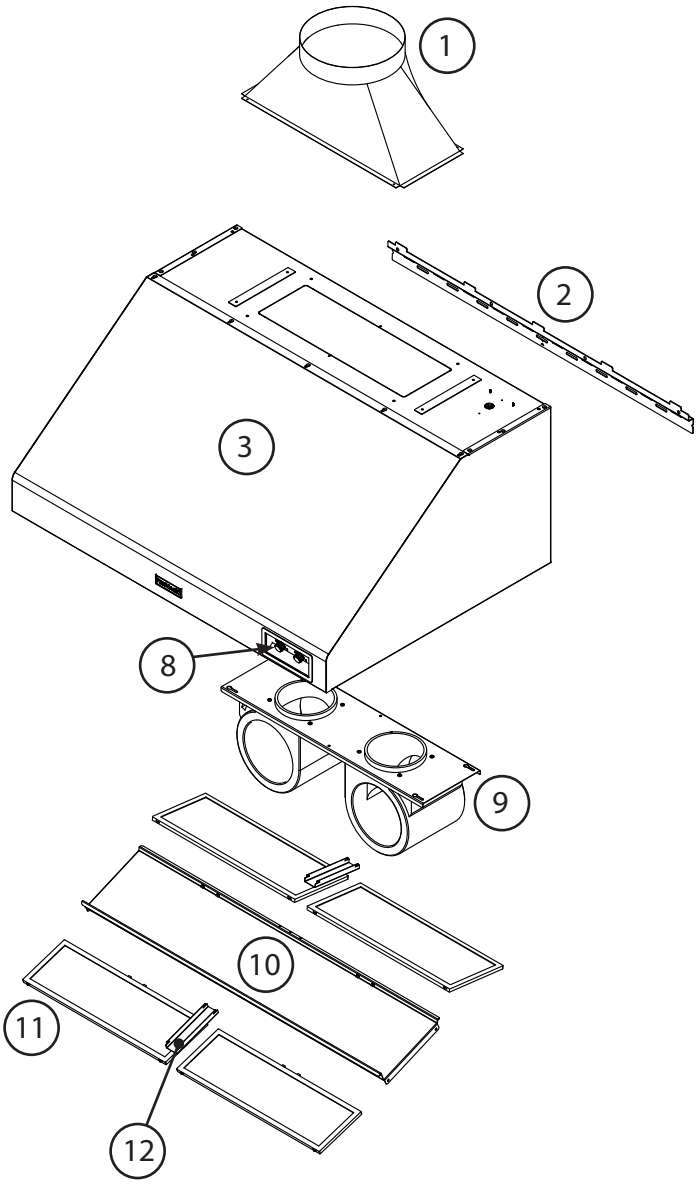

IMPORTANT

Remove all packing material (including any protective coatings) and discard prior to use.

SOME COMPONENTS ARE HEAVY

HANDLE WITH CARE

INSTALLATION REQUIREMENTS - FIRE MAGIC SPACER & DUCT COVER

Fire Magic offers a spacer and duct cover specifically designed for your vent hood. Reference the information below for an overall orientation. (See Table 2 and contact your dealer for ordering information.)

In order to use these prefabricated components, ensure the component dimensions allow for an appropriate install as addressed below (as individual setups may vary).

Alternatively, a custom spacer and soffit can be constructed that are appropriate for your individual setup. See the following page for details.

- **THIS VENT HOOD IS FOR OUTDOOR, WALL MOUNT INSTALLATION ONLY.**
- **Installation must be done by a qualified professional service technician.**
- Below is a diagram of a generic installation.
- Please review and understand this section prior to proceeding with installation.

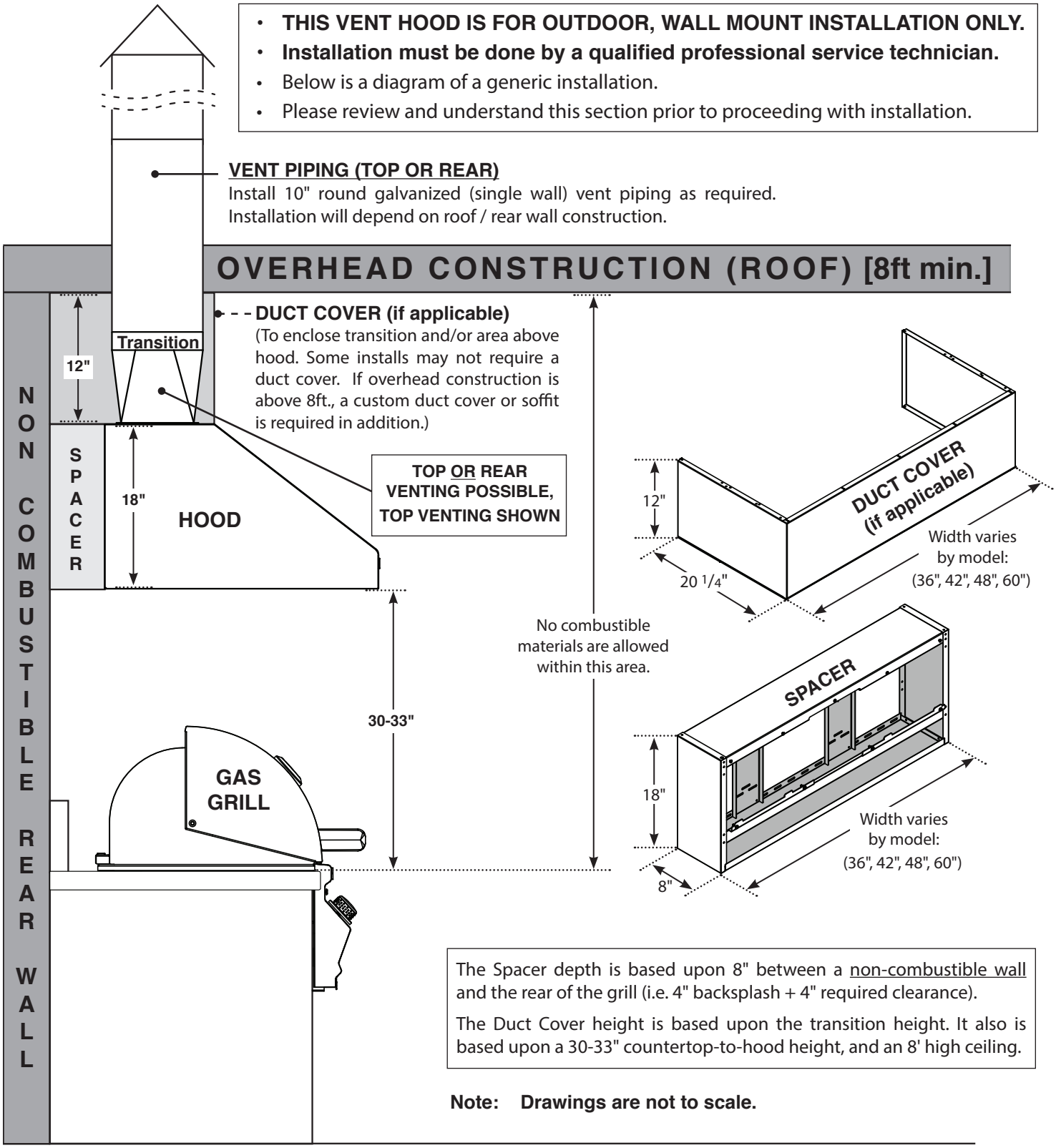

The Spacer depth is based upon 8" between a non-combustible wall and the rear of the grill (i.e. 4" backsplash + 4" required clearance).

The Duct Cover height is based upon the transition height. It also is based upon a 30-33" countertop-to-hood height, and an 8' high ceiling.

Note: Drawings are not to scale.

REFER TO INSTALLATION SECTION FOR COMPLETE DETAILS REGARDING ALL INFORMATION FOUND ON THIS PAGE.

INSTALLATION REQUIREMENTS - CUSTOM SPACER & SOFFIT

When constructing a custom spacer and soffit, reference the information below for an overall orientation.

- **THIS VENT HOOD IS FOR OUTDOOR, WALL MOUNT INSTALLATION ONLY.**
- **Installation must be done by a qualified professional service technician.**
- Below is a diagram of a generic installation.
- Please review and understand this section prior to proceeding with installation.

VENT PIPING (TOP OR REAR)
Install 10" round galvanized (single wall) vent piping as required.
Installation will depend on roof / rear wall construction.

OVERHEAD CONSTRUCTION (ROOF)

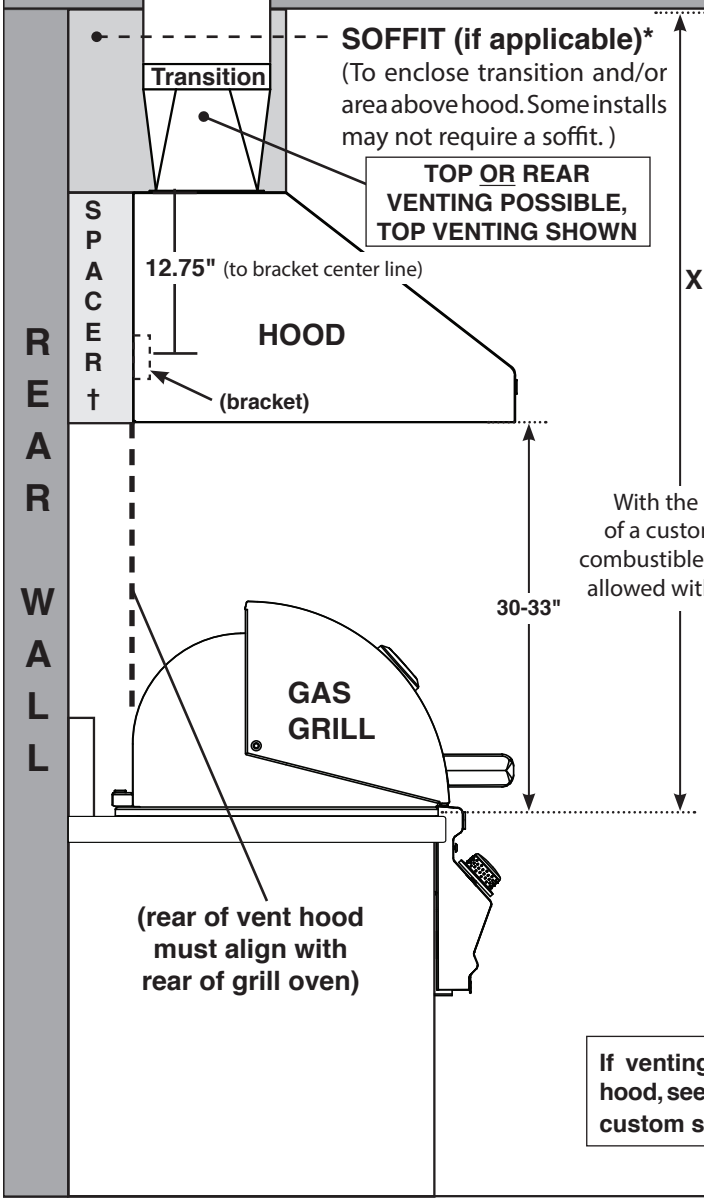

With the exception of a custom soffit, no combustible materials are allowed within this area.

Custom Soffit *

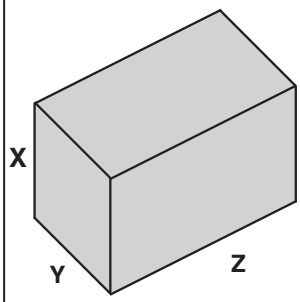

Custom Soffit Detail (if applicable)*			
Model	**X**	**Y**	**Z**
36-VH	distance from top of vent hood to roof	B dimension of spacer + 12"	36"
42-VH	distance from top of vent hood to roof	B dimension of spacer + 12"	42"
48-VH	distance from top of vent hood to roof	B dimension of spacer + 12"	48"
60-VH	distance from top of vent hood to roof	B dimension of spacer + 12"	60"

Note: Drawings are not to scale.

Custom Spacer †

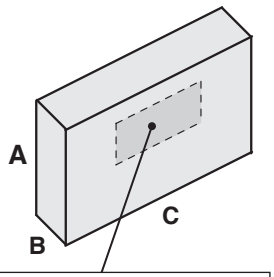

If venting through rear of vent hood, see next page for additional custom spacer specifications.

Custom Spacer Detail †			
Model	**A**	**B**	**C**
36-VH	18"	distance from rear wall to rear of grill oven ‡	36"
42-VH	18"	distance from rear wall to rear of grill oven ‡	42"
48-VH	18"	distance from rear wall to rear of grill oven ‡	48"
60-VH	18"	distance from rear wall to rear of grill oven ‡	60"

‡ Ensure all installation requirements found in grill owner's manual are met.

* Soffit may be constructed of wood, metal framing, etc. Upon install completion; the exposed sides of the soffit may be finished with drywall or other appropriate materials. Dimensions provided here include any finishing substrate. The soffit must allow permanent interior access (i.e. access panel/door).

† Spacer **must be constructed entirely of non-combustible material only.** Dimensions provided here include any finishing substrate. The front of the spacer (that is exposed to the rear of the vent hood), must include a solid wall to allow for the vent hood to be properly secured into it. If venting through the rear of the vent hood, the correct cutouts for the transition must be considered when constructing (see next page for additional spacer specifications).

REFER TO INSTALLATION SECTION FOR COMPLETE DETAILS REGARDING ALL INFORMATION FOUND ON THIS PAGE.

If venting through the rear of the vent hood, the custom-built spacer must have cutouts for the transition to pass through. See below for cutout information specific to your vent hood model.

Custom Spacer - Transition Cutout Specifications					
Model	**D** Rectangular cutout width (entry)	**E** Rectangular cutout height (entry)	**F *** Distance from center of cutouts to bottom of spacer (entry & exit)	**G *** Distance from center of cutouts to side of spacer (entry & exit)	**H** Circular cutout diameter (exit)
36-VH	22"	11 1/2"	12"	18"	11 1/2"
42-VH	22"	11 1/2"	12"	21"	11 1/2"
48-VH	22"	11 1/2"	12"	24"	11 1/2"
60-VH	22"	11 1/2"	12"	30"	11 1/2"

* Value includes finishing substrates

FRONT VIEW
Transition Cutout (Entry)

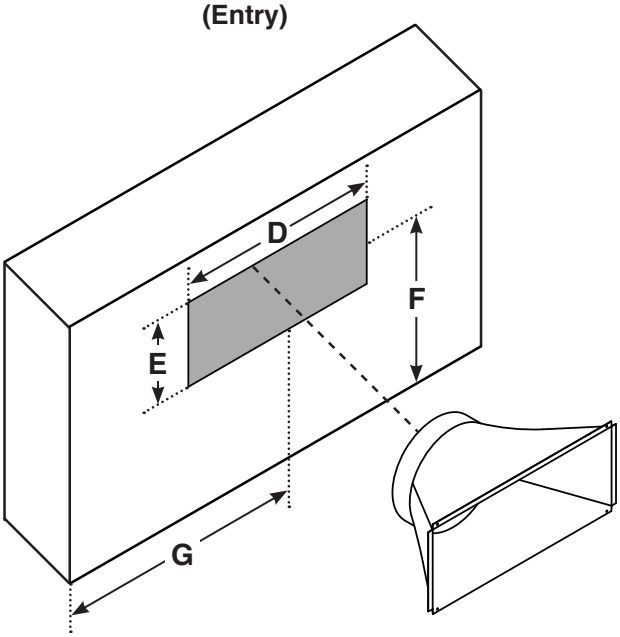

REAR VIEW
Transition Cutout (Exit)

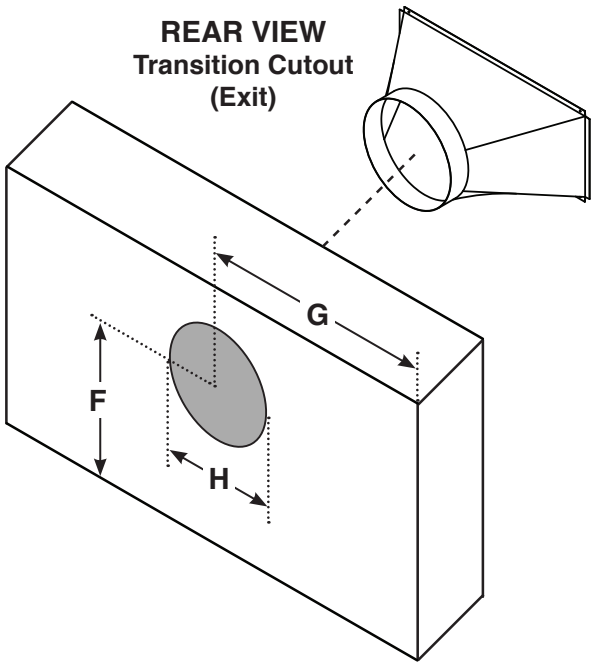

Note: Drawings are not to scale.

THIS VENT HOOD IS FOR OUTDOOR, WALL MOUNT INSTALLATION ONLY.

To ensure safety and proper performance, the vent hood installation must be done by a qualified professional service technician. Reference the INSTALLATION REQUIREMENTS section during the course of the install for dimensions and overall orientation.

If possible, the gas grill should be removed for ease of installation and to prevent damage to the grill.

REMOVE BAFFLE AND MOUNTING BRACKET

Remove the baffle (inside of vent hood) and the mounting bracket (rear of vent hood). Be sure to retain for later installation. See Fig. 12-1 and 12-2.

Note: If a Fire Magic spacer is used with the vent hood, the mounting bracket will not be needed.

INSTALL SPACER

Fire Magic offers a spacer specifically designed for your vent hood. See Table 2 and contact your dealer for ordering information. Alternatively, a custom spacer can be constructed for your setup (non-combustible construction only).

Follow the appropriate section for your spacer type.

Fire Magic Spacer:

The Fire Magic spacer comes ready to be mounted. **It should be installed 30-33" above the grill, centered, and level. See Fig. 12-3.**

Important: Be sure to allow for the proper clearance above the spacer for the soffit / duct cover that is to be installed at a later time.

1. Locate and mark the REAR WALL studs.
2. Determine the install location of the spacer (30-33" above the countertop) and pencil in a horizontal line on the rear wall. Locate the "left-to-right" center, and pencil a vertical line. See Fig. 12-4, A-B.
3. If venting from the rear of the vent hood, **a cutout through the rear wall is required for venting**. Mark a point on the vertical line 12" up from the horizontal line and drill an 11$^1/_2$" hole through the rear wall (see Fig. 12-4, C).

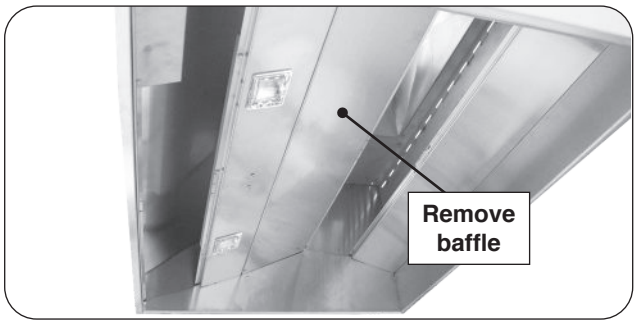

Fig. 12-1 Remove baffle

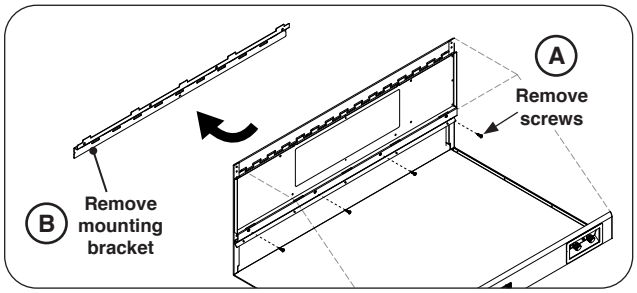

Fig. 12-2 Remove mounting bracket

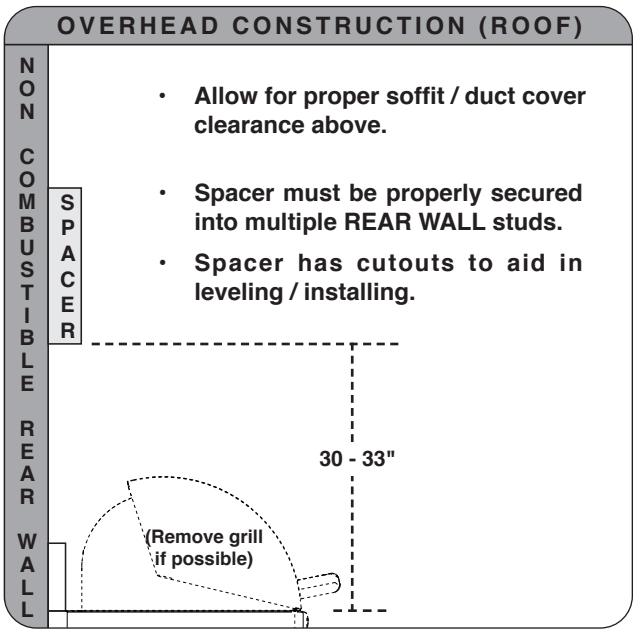

Fig. 12-3 Fire Magic spacer orientation

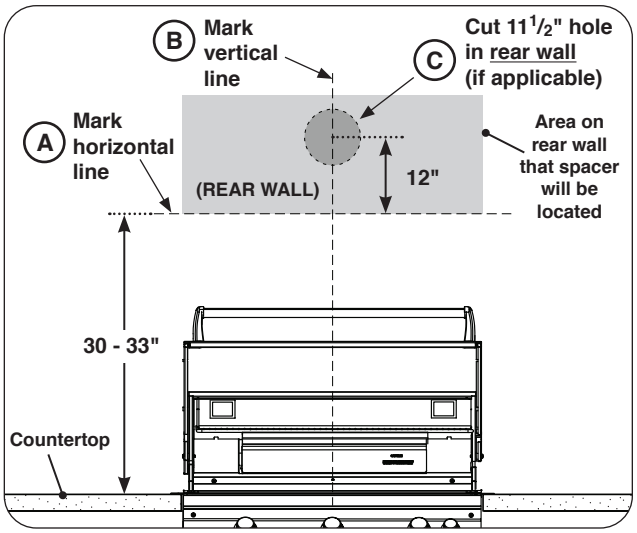

Fig. 12-4 Determine spacer location, create rear cutout

4. Carefully place and hold the spacer over the two marked lines. Center the spacer to the vertical line (using the notches), and align the bottom of the spacer to the horizontal line. See Fig. 13-1, D-E.

5. Using appropriate mounting hardware for the rear wall construction, secure the spacer into the rear wall (see Fig. 13-1, F).

   Use the support plates (supplied with spacer), to secure the top row of the spacer into the rear wall.

Important: THE SPACER MUST BE SECURED INTO MULTIPLE WALL STUDS, USING THE APPROPRIATE HARDWARE, TO ENSURE PROPER SUPPORT. METAL FRAMEWORK WILL REQUIRE ADDITIONAL WALL STUDS AND SCREWS FOR PROPER SUPPORT. CONSULT A PROFESSIONAL CONTRACTOR FOR YOUR INDIVIDUAL SETUP.

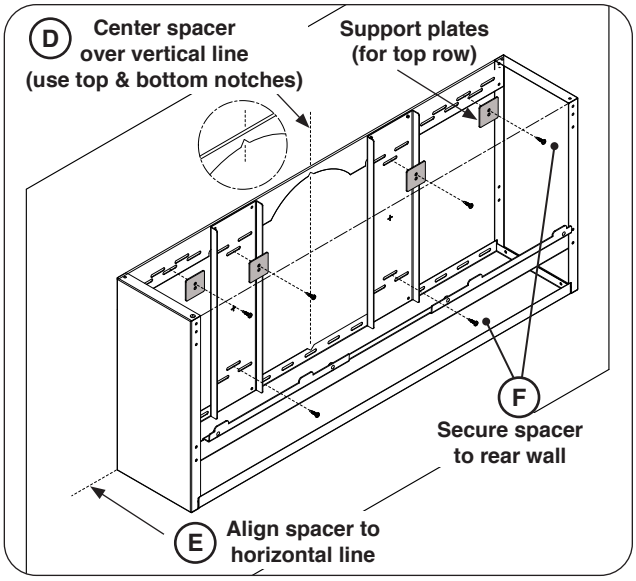

Fig. 13-1 Install Fire Magic spacer (36" shown)

Custom Spacer:

Important: The custom spacer must be constructed of non-combustible material only.

Construct the spacer frame according to your individual install preference, while following the guidelines found in the INSTALLATION REQUIREMENTS section. The front of the spacer (that is exposed to the rear of the vent hood), must include a solid wall to allow for the vent hood to be properly secured into it. When venting through the rear wall, the spacer must also have cutouts to allow for the transition to pass through.

When designing the spacer, account for the thickness of your finishing substrate so that overall dimensions are flush with the vent hood.

The spacer should be installed 30-33" above the grill, centered, and level. See Fig. 13-2.

Important: Be sure to allow for the proper clearance above the spacer for the soffit / duct cover that is to be installed at a later time.

1. Locate and mark the REAR WALL studs.
2. Determine the install location of the spacer (30-33" above the grill).
3. Using appropriate mounting hardware for the spacer and rear wall construction, secure it into the rear wall.

Important: THE SPACER MUST BE SECURED INTO MULTIPLE WALL STUDS, USING THE APPROPRIATE HARDWARE, TO ENSURE PROPER SUPPORT. METAL FRAMEWORK WILL REQUIRE ADDITIONAL WALL STUDS AND SCREWS FOR PROPER SUPPORT. CONSULT A PROFESSIONAL CONTRACTOR FOR YOUR INDIVIDUAL SETUP.

4. Install finishing substrate to left and right sides, and bottom of spacer as appropriate.

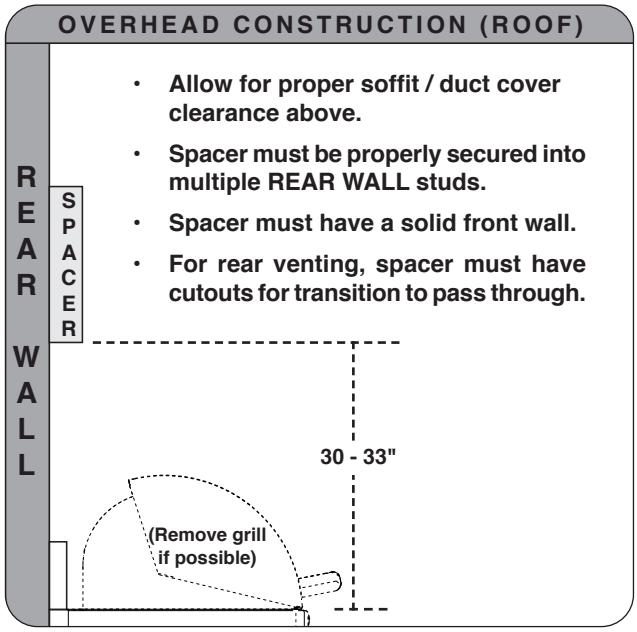

Fig. 13-2 Custom spacer orientation

INSTALL TRANSITION

1. **Before mounting the transition onto the unit, remove the appropriate knock-out required for your installation (see Fig. 14-1).**
2. **Top venting:** Carefully rest the vent hood on its rear panel.

   Rear venting: Carefully rest the vent hood upside down. An additional person will be needed to prevent the hood from tipping while upside down.
3. Apply a bead of silicone along the bottom of the mounting flange of the transition (see Fig. 14-2, A).
4. Position the transition in place and secure using a power drill with a 1/4" hex driver (or a 1/4" nut driver) and the (4) supplied #6 x 3/8" hex head screws. Reach into and fasten the screws from inside the vent hood. (An additional person should hold the transition in place while it is being fastened.) See Fig. 14-2, B-C.

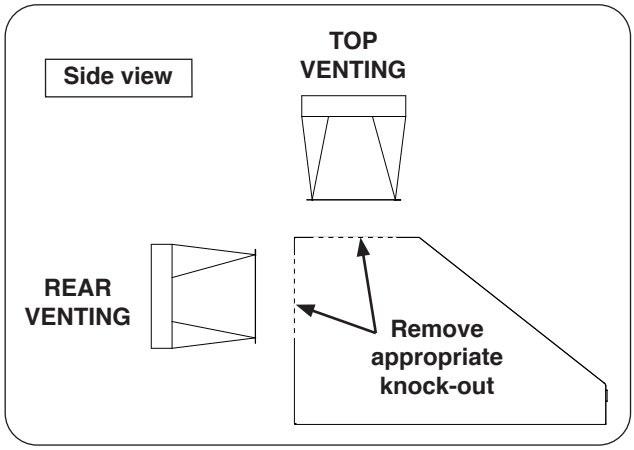

Fig. 14-1 Remove knock-out (top or rear)

INSTALL MOUNTING BRACKET (custom spacer only)

If using a Fire Magic spacer, proceed to the following MOUNT VENT HOOD section.

The mounting bracket (previously removed from hood) must be installed onto the custom spacer to assist in supporting the vent hood.

The bracket should be centered from left to right on the spacer. The horizontal position of the bracket center must be 12 3/4" down from the top of the vent hood/spacer. Alignment notches are provided on the center and sides of the bracket to aid in proper location and leveling.

1. Locate the "left-to-right" center of the spacer and pencil a vertical line. Then pencil a horizontal line 12 3/4" down from the top of the spacer (see Fig. 14-3, A-B).
2. Place the bracket over the two lines. Use the alignment notches in the center and sides of the bracket to properly locate and assist in leveling (see Fig. 14-3, C).
3. Using appropriate mounting hardware for the spacer construction, secure the bracket onto the spacer (see Fig. 14-3, D).

Important: THE BRACKET MUST BE SECURED INTO THE SPACER STUDS TO ENSURE PROPER SUPPORT. A MINIMUM OF 4 SCREWS WITH FENDER WASHERS MUST BE EVENLY DISTRIBUTED AND FASTENED INTO TWO STUDS. ADDITIONAL SCREWS WILL BE REQUIRED ACROSS THE BRACKET INTO THE SPACER WALL, FOR COMPLETE SUPPORT.

To ensure a properly installed bracket, first hand-tighten all screws. Reposition the bracket as needed, then fully tighten.

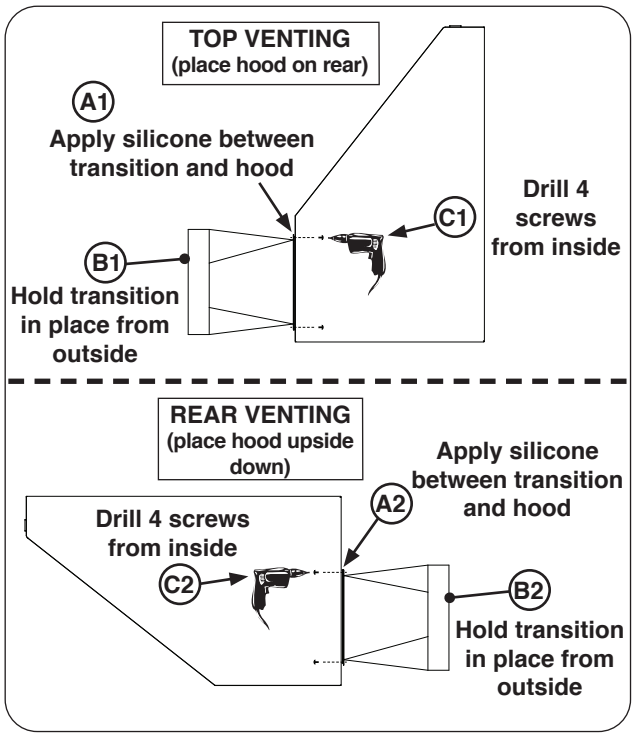

Fig. 14-2 Install transition

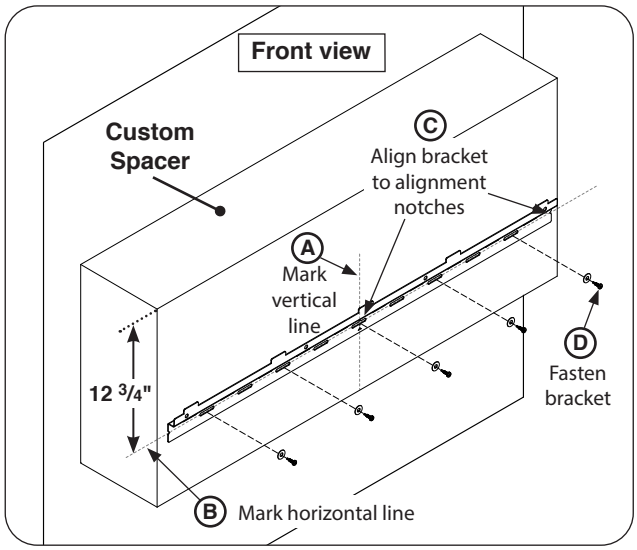

Fig. 14-3 Install bracket to custom spacer

MOUNT VENT HOOD

CAUTION: Use two or more people to mount the hood.

1. 36" models only - The junction box located inside the vent hood must be removed (2 screws) to provide room when fastening the hood.
2. Rest the vent hood onto the mounting bracket, being sure that the tabs on the bracket engage the slots on the rear of the hood for proper support (see Fig. 15-1).
3. Ensure the sides, top, and bottom of the vent hood sit flush with the spacer. See Fig. 15-2. (The spacer will already be finished with any applicable substrate, to allow for the vent hood to rest flush.)

Note: For rear venting, ensure the transition clears the cutouts and enters the rear wall without any obstructions.

4. From the inside of the vent hood, fasten the hood to the bracket using a medium Phillips screwdriver and the 1/4-20 screws supplied with the vent hood (previously removed at beginning of installation). See Fig.15-2, A.
5. From the inside of the vent hood, using appropriate mounting hardware for the spacer construction, secure the top portion of the hood directly into the spacer. Use the supplied support plates when fastening, see Fig. 15-2, B.

   Fire Magic spacers include these screws (#10 x 3/4").
6. Reinstall the junction box, if previously removed.

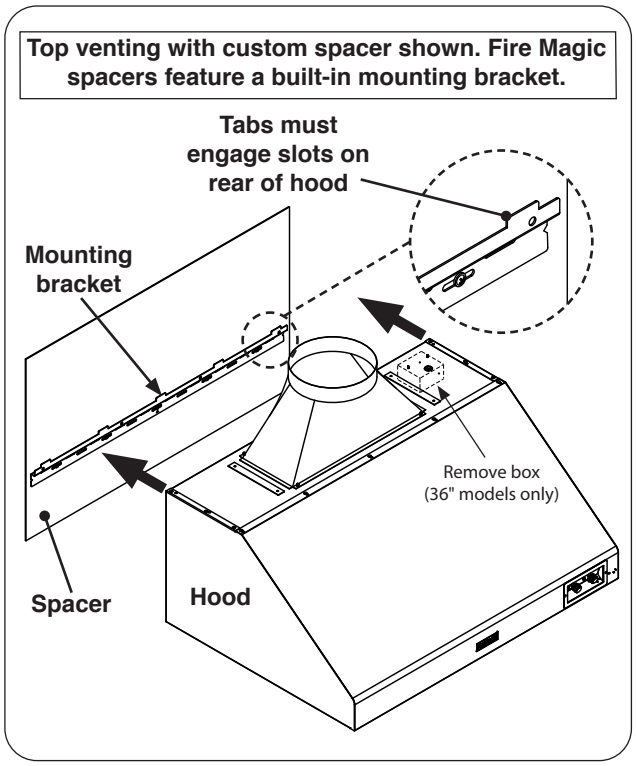

Fig. 15-1 Mount vent hood

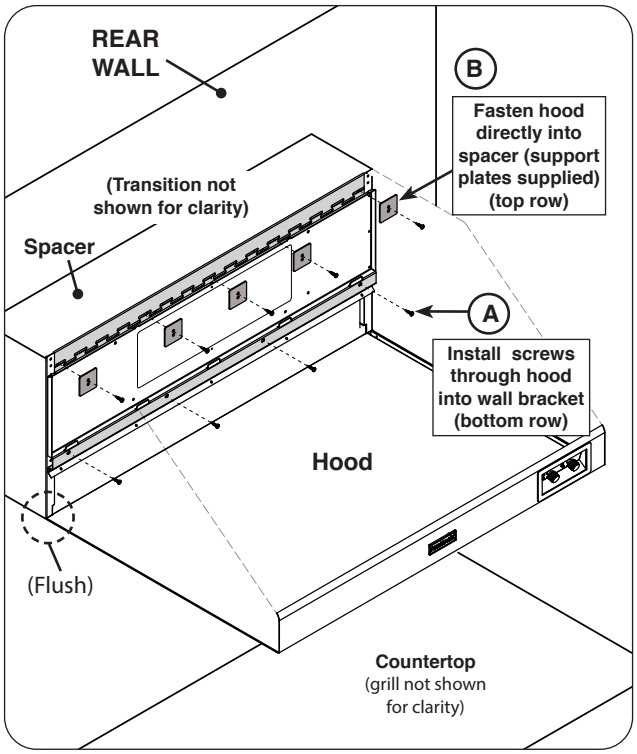

Fig. 15-2 Secure vent hood (42" shown)

INSTALL VENT PIPING

A cutout will need to be made in the roof (or rear wall) to route the piping through, and must be sealed with silicone to prevent leaks.

1. Install 10" round galvanized rigid (single wall) vent piping from the transition on, as required. All joints must be sealed using duct tape.

Important: Vent piping should be installed as straight as possible to prevent back-pressure on the fans.

Important: If an offset is required for your installation, a maximum of two 45˚ elbows may be used. A 90˚ elbow (max of one) for this installation is permitted but not recommended as it reduces the performance of the vent hood. See Fig. 16-2.

2. Using duct tape and the appropriate hardware, install a termination cap at the end of the vent piping to prevent water and debris from entering the vent hood. See Fig. 16-3.

Important: A non-restrictive termination cap is recommended. **The use of a restrictive cap is not recommended.** See Fig. 16-3.

Installation will depend on roof/rear wall construction and individual setup.

Exceeding a 20 foot total vent piping length will reduce the effectiveness of your exhaust system. A supplemental booster fan is recommended for long pipe runs.

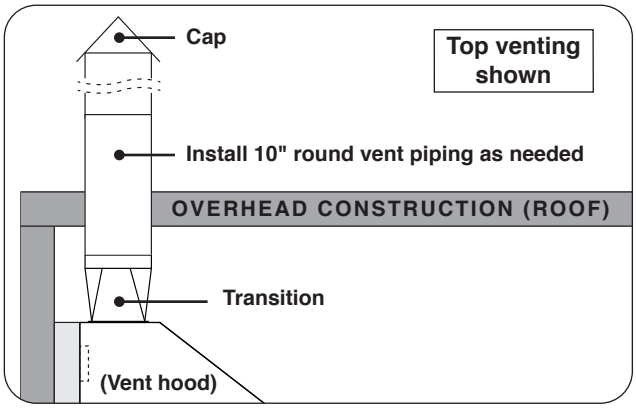

Fig. 16-1 Common installation

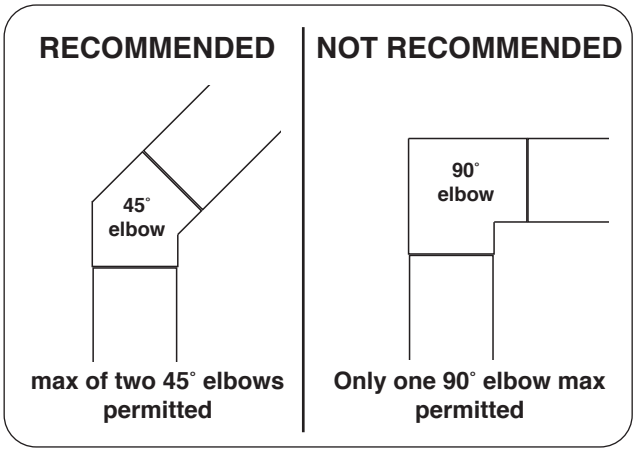

Fig. 16-2 Vent piping - elbows

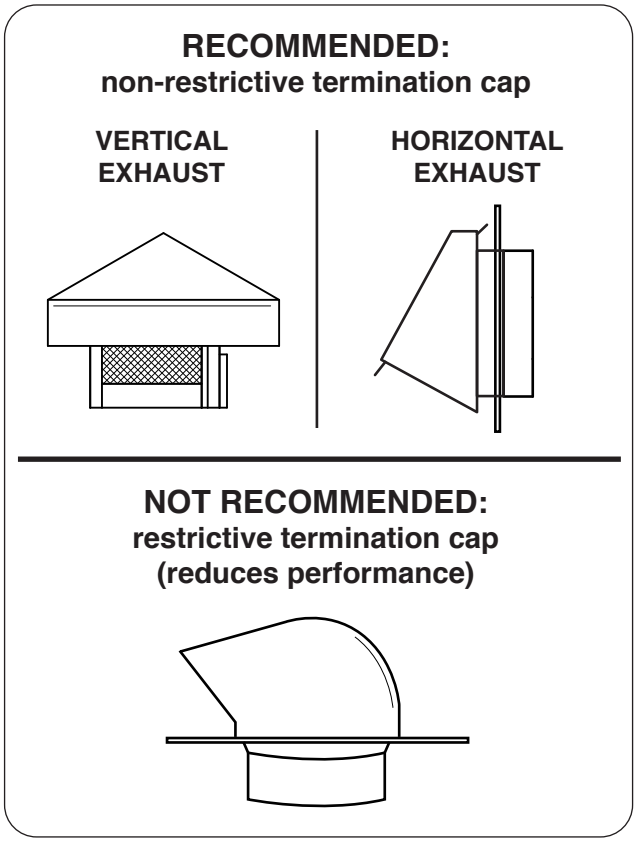

Fig. 16-3 Vent piping - termination caps

INSTALL FAN ASSEMBLY

The fan assembly must be installed in the direction the transition has been installed for venting. See the diagram in Fig. 17-1 to determine the appropriate setup. Installation is the same for both methods. Top venting shown here.

1. Locate the (4) nuts pre-installed to the ceiling or rear wall (as applicable) of the vent hood, and using a 3/8" nut driver, loosen (but do not remove) to allow for the fan assembly to be inserted. See Fig. 17-2.
2. With the electrical connection oriented to the right side of the vent hood, carefully position the fan assembly, aligning the keyholes to the loosened nuts. See Fig. 17-2, A.
3. Mount the fan assembly flush against the vent hood ceiling (or rear wall) ensuring the nuts protrude through the keyholes, then slide the assembly to the left so that it is supported from the nuts. See Fig. 17-2, A and B.

CAUTION: TO PREVENT INJURY OR DAMAGE TO THE FAN ASSEMBLY, THE FAN MUST BE SUPPORTED UNTIL IT IS PROPERLY SECURED IN PLACE.

4. Fasten the (4) nuts to secure the fan assembly in place. Then fasten two self-tapping screws (provided) into the two center holes for additional support. See Fig. 17-3, C and D.

CONNECT WIRING

1. A wire connection exists toward the right rear of the fan assembly. Connect it to the wire harness coming out the right rear of the vent hood. See Fig. 17-4, E.

Note: First apply a small amount of the provided dielectric grease to the male connector, then make the connection.

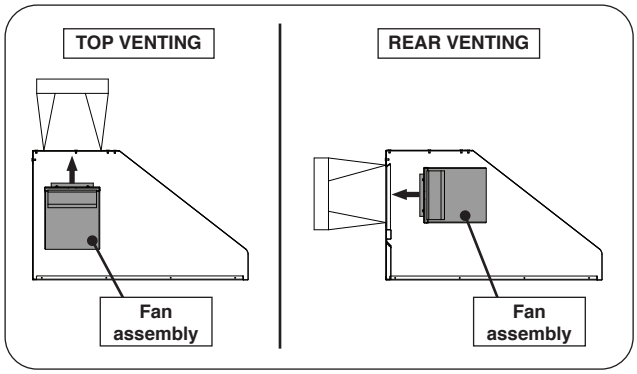

Fig. 17-1 Fan assembly mounting diagram

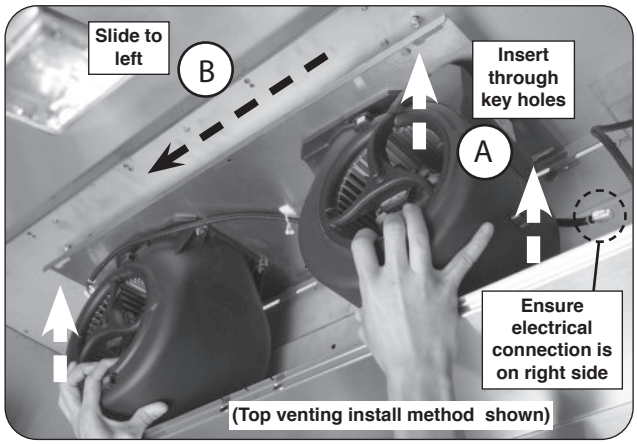

Fig. 17-2 Insert fan assembly

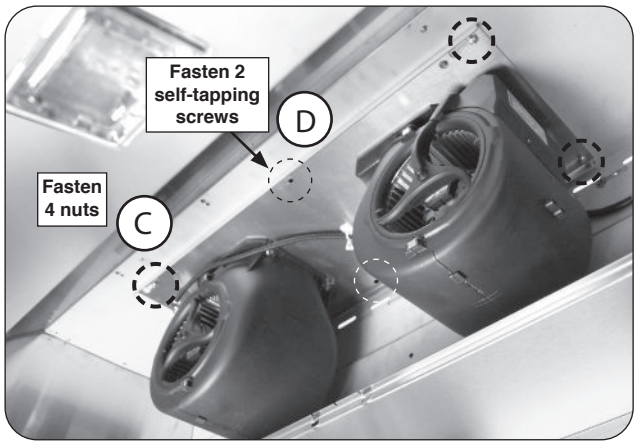

Fig. 17-3 Fasten nuts and screws to secure

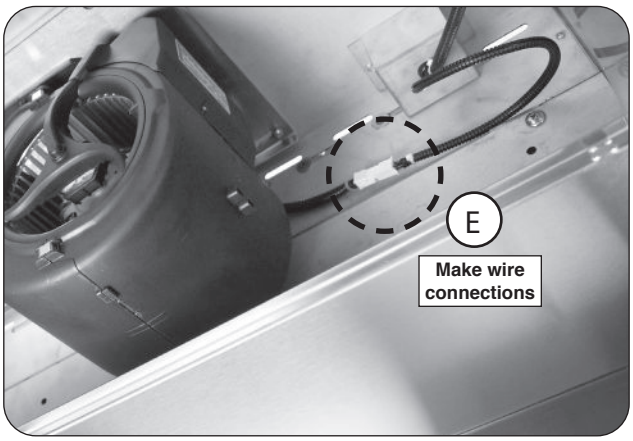

Fig. 17-4 Connect fan assembly wire

INSTALL ELECTRICAL

A **120VAC (15 AMP minimum) GFCI GROUNDED 3-wire receptacle** (not included) is required within the vicinity of the vent hood to provide power to the unit. The area above the vent hood that the soffit / duct cover will enclose is an ideal location (reference Fig 18-1). Your individual installation may vary.

1. Wire the receptacle near the top right of the unit (see Fig 18-1).
   - **Observe the National Electric Code and all local codes.**
   - **Verify proper polarity of the receptacle.**
2. Connect the power cord coming from the top right of the unit to the **120VAC (15 AMP minimum) GFCI GROUNDED 3-wire receptacle** (see Fig. 18-1 and Fig. 18-2).

Note: The power cord must be plugged in when operating the vent hood.

WARNING: Electrical Grounding Instructions - This appliance is equipped with a three-prong (grounding) plug for your protection against shock hazard and should be plugged directly into a properly grounded three-prong receptacle. Do not cut or remove the grounding prong from this plug.

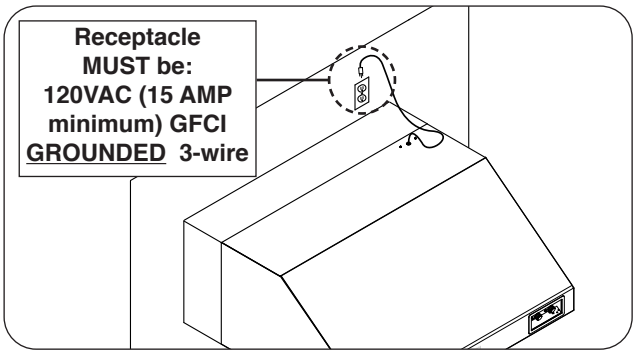

Fig. 18-1 Install receptacle & connect power cord

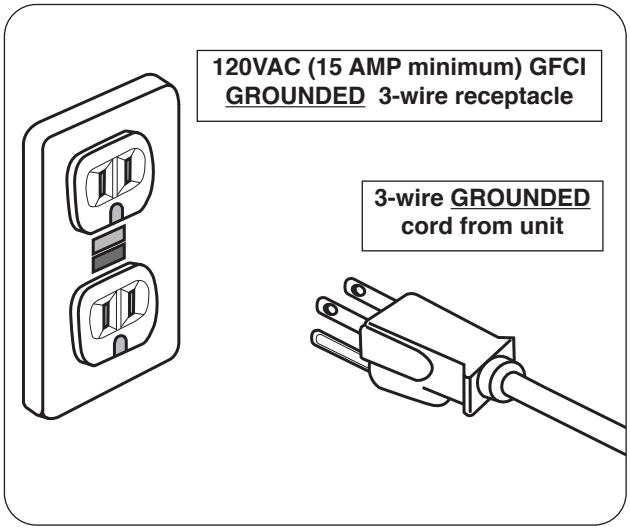

Fig. 18-2 Electrical setup detail

INSTALL DUCT COVER/CUSTOM SOFFIT (if applicable)

Note: Some installs may not require a duct cover / soffit, as island height, roof height, and venting setup may vary.

Fire Magic offers a duct cover specifically designed for your vent hood. See Table 2 and contact your dealer for ordering information. Alternatively, a custom soffit can be constructed for your setup.

Follow the appropriate section for your setup.

Fire Magic Duct Cover:

The Fire Magic duct cover comes ready to be installed.

1. Carefully slide the duct cover into the area above the already installed spacer and vent hood. Ensure the bottom perimeter of the duct cover rests flush with the spacer and vent hood. See Fig. 19-1.
2. From beneath the vent hood, use a medium Phillips screwdriver and the 8-32 x 3/8" screws supplied with the duct cover to secure it to the vent hood. (The screws are to be fastened through the pilot holes found on top of the vent hood and into the duct cover above.) See Fig. 19-1.

Important: To prevent cross-threading the screws they should be installed with a manual screwdriver and a small amount of household grease.

Note: The rear of the duct cover does not need to be secured to the rear wall.

Important: DO NOT apply sealant to the duct cover as it must be removable for servicing and for access to the electrical connection.

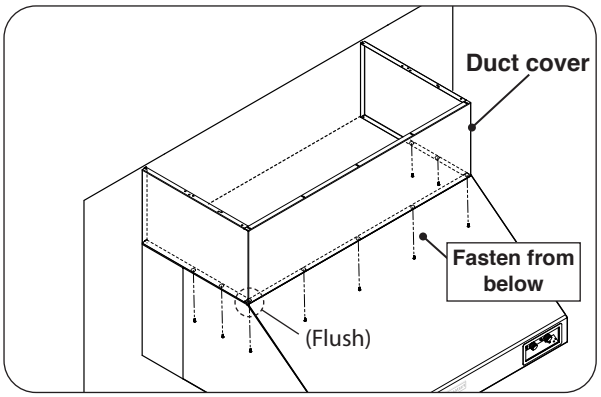

Fig. 19-1 Install Fire Magic Duct Cover

Custom Soffit:

Construct the soffit frame according to your individual install preference, while following the guidelines found in the INSTALLATION REQUIREMENTS section.

When designing the soffit, account for the thickness of your finishing substrate so that overall dimensions are flush with the vent hood and spacer below. The soffit must allow permanent interior access (i.e. access panel/door).

1. Locate and mark the REAR WALL studs.
2. Using appropriate mounting hardware for the soffit and rear wall construction, secure it into the rear wall. The soffit will rest directly above the spacer and vent hood.

Important: THE SOFFIT MUST BE SECURED INTO MULTIPLE WALL STUDS, USING THE APPROPRIATE HARDWARE, TO ENSURE PROPER SUPPORT. METAL FRAMEWORK WILL REQUIRE ADDITIONAL WALL STUDS AND SCREWS FOR PROPER SUPPORT. CONSULT A PROFESSIONAL CONTRACTOR FOR YOUR INDIVIDUAL SETUP.

3. Install finishing substrate to left and right sides, and front of soffit as appropriate.

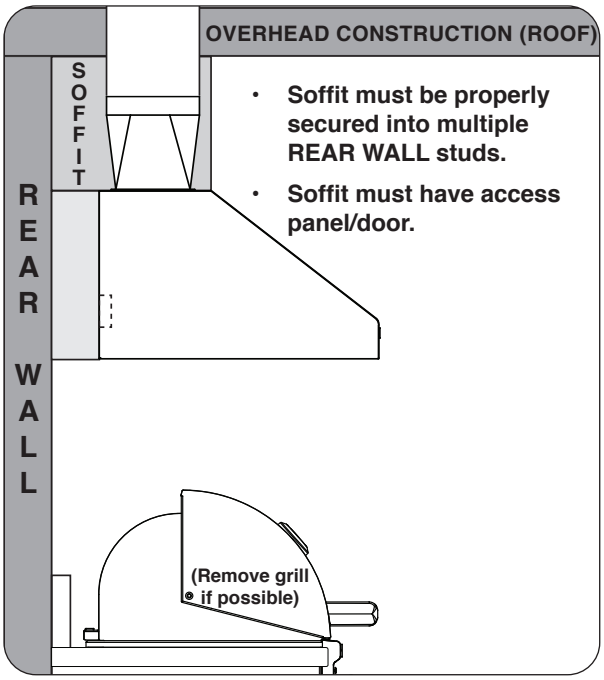

Fig. 19-2 Custom soffit orientation

INSTALL BAFFLE

1. Carefully raise the baffle up into the vent hood. You will first need to slide one side in at a slight angle, until the baffle edge aligns above the inner wall (see Fig. 20-1). Then raise the opposite side of the baffle until it also aligns. Drop the baffle into place.
2. Align the 4 screw holes (2 on each side), then secure the baffle in place using a medium Phillips screwdriver and the supplied 8-32 x 3/8" screws (that were originally removed at beginning of installation). See Fig. 20-2.

Important: To prevent cross-threading the screws they should be installed with a manual screwdriver and a small amount of household grease.

INSTALL GREASE FILTERS

1. Install the filter spacer (if applicable, 42" models only). See Fig. 20-3. Repeat for other side.
2. Install a filter into the vent hood by first pressing in the lever, then aligning the tabs found on the filter into the notches found in the interior of the hood. The filters will secure in place. Repeat for all filters. See Fig. 20-4.

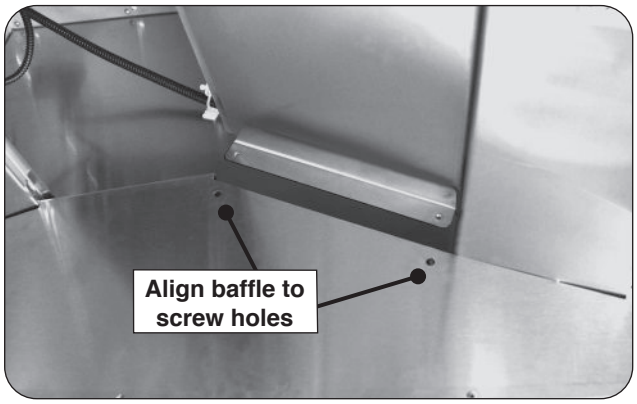

Fig. 20-1 Insert and align baffle

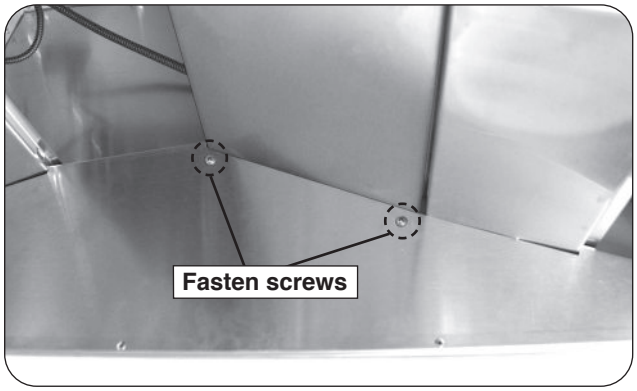

Fig. 20-2 Secure baffle

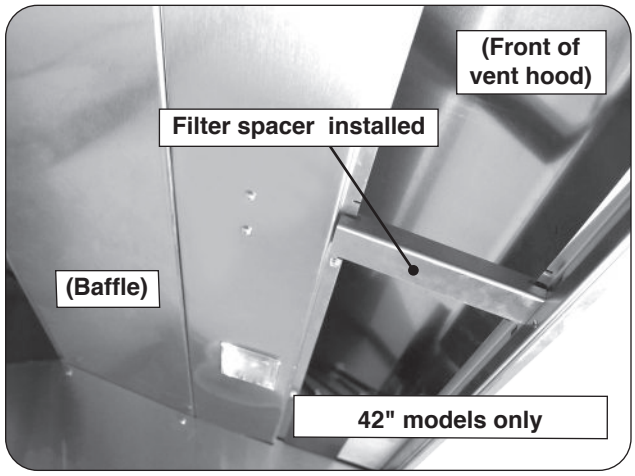

Fig. 20-3 Install filter spacer (if applicable)

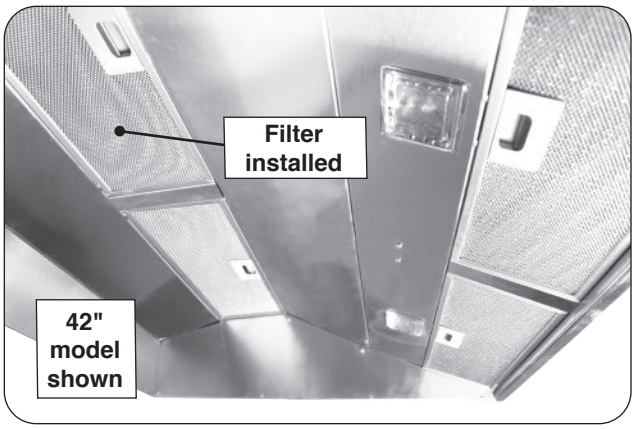

Fig. 20-4 Install filters

VENT HOOD FANS

To operate the fans, turn the fan knob located on the front right of the vent hood to your desired setting. The fan knob is symbolized with a fan logo etched beside it. See Fig. 21-1.

To turn off the fans, turn the knob to the **OFF** position.

Note: The vent hood is equipped with an internal thermal switch. When the surrounding area reaches temperature, the thermal switch will automatically turn on the vent hood fans. When the vent hood is operating on the **LO** setting, it will automatically switch to the **HI** setting to maintain a safe operating temperature. This feature is for convenience and prevents damage to the vent hood. The fans will continue to run until the hood cools down.

- Turn the fans on before cooking to establish an air flow.
- Be sure to turn the fan knob to the **OFF** position after cooking. (Allow the fans to operate for a few minutes after you turn the grill off, to clear the air out and keep the area smoke free.)

GRILL TOP LIGHTING

The halogen lights are controlled by turning the light knob located on the front right side of the vent hood to your desired setting. The light knob is symbolized with a light bulb logo etched beside it. See Fig. 21-1.

Turn the knob to **OFF** position to turn the lights off.

Clean the vent hood on a regular basis to ensure optimal performance. See the SERVICING AND CLEANING section for details.

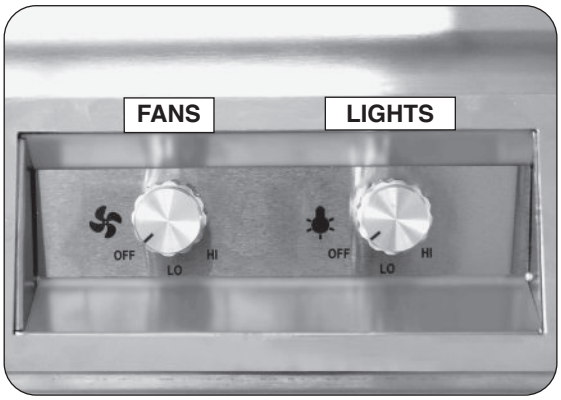

Fig. 21-1 Control knobs

VENTILATEUR DE CAPOT DE PASSAGE

Pour faire fonctionner les ventilateurs, il suffit de tourner le bouton du ventilateur situé à l'avant droit de la hotte au réglage désiré. Le bouton du ventilateur est symbolisé par un logo fan gravé à côté de lui. Voir la Fig. 22-1.

Pour éteindre les ventilateurs, tournez le bouton en position **OFF**.

Note: La hotte d'aspiration est équipé d'un interrupteur thermique interne. Lorsque la zone environnante atteint la température, l'interrupteur thermique se met automatiquement sur les ventilateurs de la hotte de ventilation. Lorsque la hotte est en fonctionnement sur le réglage **LO**, il passera automatiquement au réglage de **HI** pour maintenir une température de fonctionnement. Cette fonction est une commodité et évite d'endommager la hotte. Les ventilateurs continueront à fonctionner jusqu'à ce que le capot refroidisse.

- Allumez les ventilateurs avant la cuisson pour établir un flux d'air.
- Assurez-vous de tourner le bouton du ventilateur en position OFF après la cuisson. (Laissez les ventilateurs fonctionner pendant quelques minutes après avoir éteint le gril pour purger l'air et maintenir la zone sans fumée.)

ÉCLAIRAGE SUPÉRIEUR DE GRIL

Les lampes halogènes sont contrôlés en tournant le bouton de lumière situé sur le côté avant droit de la hotte au réglage désiré. Le bouton lumière est symbolisée par un logo d'ampoule gravé à côté de lui. Voir Fig. 22-1.

Tournez le bouton à la position **OFF** pour éteindre les lumières.

Nettoyer la hotte sur une base régulière pour assurer une performance optimale. Voir la section ENTRETIEN ET NETTOYAGE pour plus de détails.

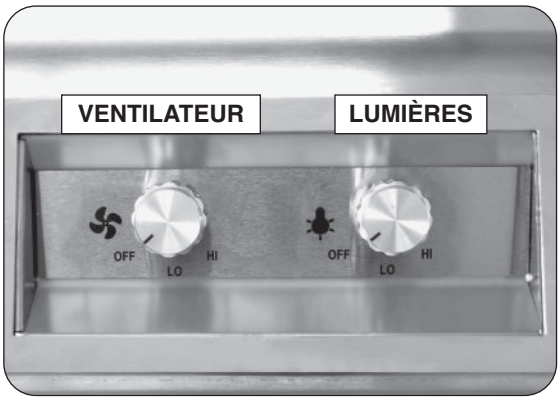

Fig. 22-1 Boutons de contrôle

SERVICING AND CLEANING

Your vent hood requires regular cleaning and maintenance. Refer to these instructions for details. Performing these procedures will ensure proper operation, appearance, and safety.

WARNINGS

- Prior to servicing or cleaning make sure the vent hood and grill below are completely cool and turned to the OFF position, and the power supply is disconnected.
- Wear appropriate gloves and safety glasses during any servicing or cleaning.
- DO NOT spray any cleaner or liquids on the unit when hot.
- The unit MUST be cleaned regularly to prevent grease build-up. A clean and well maintained unit prevents the risk of grease build-up.
- Verify proper operation after servicing or deep cleaning.
- See IMPORTANT PRE-INSTALLATION AND SAFETY INFORMATION section for additional related information.

CLEANING YOUR VENT HOOD

Before Each Use

1. **Inspect and clean the interior and exterior surfaces of the unit:** With a cool unit, clean any dust or grease as needed with a damp clean cloth.

Twice A Year (or as needed) - Deep Clean

1. **Interior components:** In addition to cleaning the interior and exterior surfaces of the unit, a deep clean of the grease filters, baffle, and fans MUST be performed twice year (or as needed depending on use). Follow the steps below.
   - **a.** Grease filters and baffle: With a cool unit, remove the grease filters and baffle. Clean the components in a soapy water solution and set aside. For tough deposits/stains on the baffle, a copper pad can be used. Always wipe with the grain.
   - **b.** Fans: Clean any dust or grease as needed with a damp clean cloth.
   - **c.** Re-install all components removed during this process.

Important: The grease filters and fans MUST be kept clean to ensure proper operation. If a filter becomes damaged or not cleanable, it must be replaced.

2. **Exterior of hood:** With a cool unit, use a grill cleaner (or a soapy water solution) and a clean cloth to remove grease and dirt from the outside of the unit. For tough deposits/stains, a copper pad can be used. Always wipe with the grain. Rinse with water and dry completely. Then follow up with a stainless steel cleaner and a clean cloth.

   If this routine cleaning is not performed, the stainless steel may become dull and develop surface rust (due to use and atmospheric conditions). If left uncleaned, significant damage and pitting may occur.

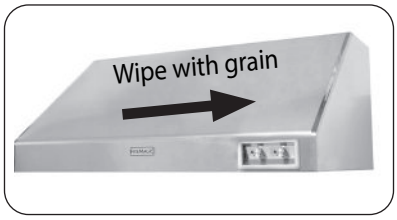

Fig. 23-1 Wipe with grain

Important: DO NOT use steel wool, any other metal tools, or any other cleaners/chemicals to clean the exterior other than recommended above. Such items promote rust.

For Environments High In Salt, Chloride, Or Other Corrosive Chemicals

When this vent hood is installed in a corrosive environment such as near the ocean (salt air), poolside (chlorine and/or pool chemicals) or any other location with exposure to high salt/chloride content or corrosive chemicals/solutions, it will be more susceptible to corrosion and MUST be maintained/cleaned more frequently.

- DO NOT store any corrosive chemicals (chlorine, hydrochloric acid, fertilizer, etc.) near your stainless steel vent hood.
- DO NOT allow any corrosive materials (masonry dust, debris, etc.) to settle on your stainless steel vent hood.
- These environments, chemicals, and materials may cause the 304 stainless steel to develop surface rust and consequently pitting. Under these conditions the vent hood exterior MUST be cleaned at least monthly. Inspect your vent hood often and clean accordingly.

FIRE MAGIC DUCT COVER REMOVAL (if applicable)

If a Fire Magic Duct Cover is installed, it must first be removed in order to access the power cord and venting components (if applicable). To remove, use a medium Phillips screwdriver to unfasten the screws found along the interior top perimeter of the vent hood. Store the screws for later re-installation (after service is complete).

HALOGEN BULBS REPLACEMENT

Important: ONLY REPLACE WITH 120V / 50 WATT HALOGEN BULB(S).

Important: Wear gloves during this procedure for safety and to maintain bulb life.

1. Disconnect the power cord.
2. With one hand directly below the light assembly, gently pry the glass lens out using a thin flat-head screwdriver. Slowly twist the screwdriver handle until the lens is removed.

Note: Replacement should only be done on a light assembly that is completely cool.

3. Clean the lens with a standard household window cleaner, dry completely, and set aside.
4. Gently remove the bulb from its socket.
5. Install a new **120V / 50 watt** halogen bulb into the socket, being sure that both pins are properly inserted.

Important: Bulb is halogen. DO NOT TOUCH with bare hands. Oils from hands drastically reduce bulb life.

6. Place the lens back into the fixture and snap it into place.

Note: The curved cutout of the lens should align over the bulb when replacing the lens.

7. Repeat as needed.
8. Reconnect the power cord and test.

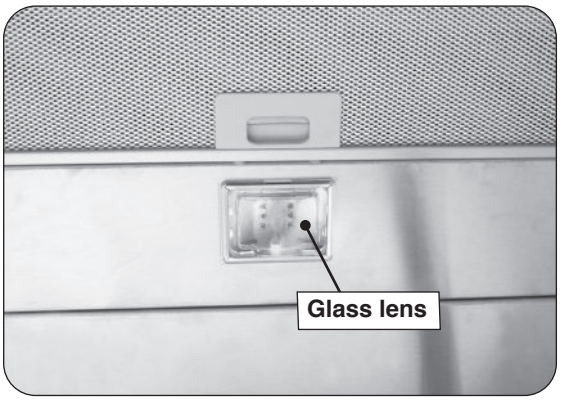

Fig. 24-1 Light orientation

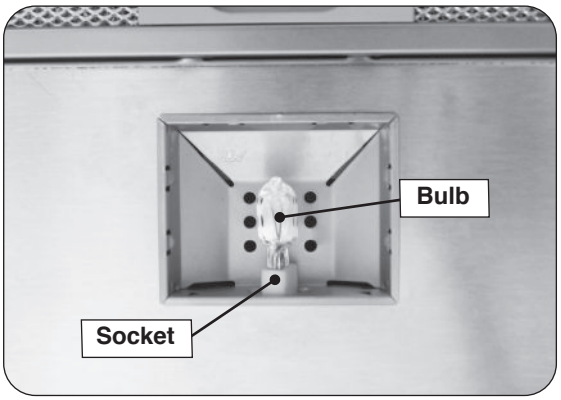

Fig. 24-2 Bulb replacement

TROUBLESHOOTING

If you have trouble with this vent hood, please use this list to identify the problem. By trying one or more of the solutions to the possible cause, you should be able to solve the problem. If this list does not cover your present problem, or if you have other technical difficulties with the vent hood, please contact your local Fire Magic dealer or visit our web site at www.rhpeterson.com.

PROBLEM	POSSIBLE CAUSE	CORRECTION
Unit does not turn on	**1.** No power to hood **2.** Switch malfunction	**1a.** Check if unit is plugged in. **1b.** Check if GFCI receptacle is tripped. **2.** Check or replace switch.
Loss of suction	**1.** Grease filter(s) clogged **2.** Fan(s) not operating **3.** Fan(s) obstructed	**1.** Clean or replace filter(s). **2.** Check or replace fan(s). **3.** Check fan(s) for possible obstructions.
Switch malfunction	**1.** Defective switch **2.** Wire harness shorted/disconnected	**1.** Check or replace switch. **2.** Check wire harness connection.
Fan malfunction	**1.** Defective fan **2.** Wire harness shorted/disconnected **3.** Fan(s) obstructed **4.** Defective switch	**1.** Check or replace fan. **2.** Check wire harness connection. **3.** Check fan(s) for possible obstructions. **4.** Check or replace switch.
Lights do not turn on	**1.** Bulb burned out **2.** Defective switch	**1.** Replace bulb. **2.** Check or replace switch.

WARRANTY

PETERSON FIRE MAGIC GRILLS AND ACCESSORIES

LIMITED WARRANTY

R.H. Peterson Co. ("RHP") warrants your Fire Magic® grill to be free from defects in material and workmanship.

Fire Magic cast stainless-steel gas burners, Choice stainless steel U shaped burners, cooking grids, and Barbecue housings are warranted **as long as the original purchaser owns them -- LIFETIME**. (Except as described below.)

Fire Magic brass valves, manifold assemblies, inner liners, porcelain housings (including ovens and barbecue faces), and **backburner assemblies** (except ignition systems) are warranted for **FIFTEEN (15) YEARS**.

Fire Magic Electric Grill stainless steel cooking grids and stainless steel housings are warranted for **TEN (10) YEARS**. (Except as described below.)

Fire Magic built-in pizza ovens and built-in and portable griddles (except ignition system and thermostat) are warranted for **TEN (10) YEARS**.

Fire Magic Infra-red burners, flavor grids, and charcoal stainless steel grills are warranted for **FIVE (5) YEARS**; except for the charcoal pan, charcoal grid, thermometer, and ash catch tray, which are warranted for **ONE (1) YEAR**.

Fire Magic sideburners, exterior Glass Fiber Reinforced Concrete (GFRC) grill island systems, and all other grill components (except ignition systems and electronic parts) are warranted for **THREE (3) YEARS**.

Fire Magic grill, pizza oven and griddle ignition systems (excluding batteries), electronic components (including lights, thermometers and thermostats) and grill and pizza accessories are warranted for **ONE (1) YEAR**.

A COPY OF YOUR SALES SLIP FOR PROOF OF PURCHASE IS REQUIRED

This warranty applies to the original purchaser for products which are installed in the United States or Canada and which are operated and maintained as intended for single family residential usage. This warranty is valid only with proof of purchase, commences on the date of purchase, and terminates (both as to original and any replacement products) on the anniversary date of the original purchase of the product per the above schedules.

This warranty covers defects in material and workmanship. This warranty **does not** cover parts which become defective as a result of negligence, misuse, use not in compliance with the Installation and Owner's Manual, accidental damage, improper handling, improper storage, improper installation, **lack of required routine maintenance** (as specified in the Installation and Owner's Manual), electrical damage, local gas impurities or failure to protect against combustible materials. Product must be installed (and gas must be connected) as specified in the Installation and Owner's Manual by a **qualified professional installer**. This warranty **does not** apply to rust, corrosion, oxidation, or discoloration unless the affected part becomes inoperable. RHP products including valves, pilots and controls, are designed and certified to be used as a system. Modifications to products which are not specifically authorized will void this warranty and could render the product to be unsafe. Burners, valves, parts, accessories, remotes, etc. used with this product must be RHP products or this warranty is void.

Warrantied items will be repaired or replaced at RHP's sole discretion. This warranty **does not** cover labor or labor related charges, except as provided by separate specific written programs from RHP. All repair work must be performed by a qualified professional service person and requires prior approval of RHP.

RHP may require the defective product or part to be returned to the factory to determine the cause of failure. RHP will pay freight charges if the product or part is determined to be defective. This warranty does not cover breakage in shipment from our independent distributor to its customer if the damage is determined to have occurred during that shipment.

This warranty specifically excludes liability for **indirect**, **incidental**, or consequential damages. Some states and provinces do not allow the exclusion or limitation of incidental or consequential damages, so the above exclusion may not apply to you. This warranty gives you specified legal rights, and you may have other rights that vary from state to state or province.

For additional information regarding this warranty, or to place a warranty claim, contact the RHP dealer where the product was purchased.

When contacting your RHP dealer or the R.H. Peterson Co., please provide the following information:

- Your name, address, telephone number, e-mail
- Sales receipt showing where purchased and date purchased
- Model number, serial number of product, date code
- Relevant information: installer, additions, repairs, when defect was first noted

TO REGISTER YOUR PRODUCT ONLINE GO TO: WWW.RHPETERSON.COM, AND CLICK ON PRODUCT REGISTRATION. THANK YOU FOR YOUR PURCHASE.

Quality Check	**Date:**_____		
Electrical Leak Test:	_____	**Model#:**	_____
Operational Test:	_____	**Serial#:**	_____
Inspector:	_____		