FIREMAGIC®

AURORA

Built-in Outdoor Combo Grill Quick Start Guide

IMPORTANT: You must read the installation and owner's manual provided with the grill.

INSTALLER: Leave these instructions with consumer. **CONSUMER:** Retain for future reference.

1-Safety

CAUTION: WHEN INSTALLING UNIT, BE AWARE OF GRILL ENCLOSURE / VENTILATION REQUIREMENTS; YOU MUST VENT UNIT IN ACCORDANCE WITH YOUR OWNER'S MANUAL. FAILURE TO DO SO MAY RESULT IN A FIRE OR EXPLOSION CAUSING PROPERTY DAMAGE, BODILY INJURY, OR DEATH.

This grill must be installed in accordance with local codes and ordinances, or, in the absence of local codes, with either the latest National Fuel Gas Code (ANSI Z223.1/NFPA 54), and Natural Gas and Propane Storage and Handling Installation Code (CSA-B149.1).

This appliance and its individual shutoff valves must be disconnected from the gas-supply piping system when testing the system at pressures in excess of ½ psig. This appliance must be isolated from the gas-supply piping system by closing its dedicated manual shutoff valve during any pressure testing of the gas-supply system at pressures up to and including ½ psig.

This unit is designed for outdoor use only. DO NOT use this grill inside a building, garage, enclosed area, or under overhead combustible construction. DO NOT use this unit in or on a recreational vehicle or boat.

A minimum 5 foot clearance is required between the countertop and the overhead construction.

Installation must be performed by a qualified professional service technician.

2-Unpacking

Carefully unpack the unit, removing all packing material and protective film (including the clear film on the drip tray). Verify that all parts have arrived undamaged by consulting the parts list in the owner's manual. Remove foam packed hardware from oven area. (See Fig. 2-1.)

Consult the parts list in the owner's manual. If any parts are missing or damaged, immediately contact the Fire Magic dealer before beginning installation.

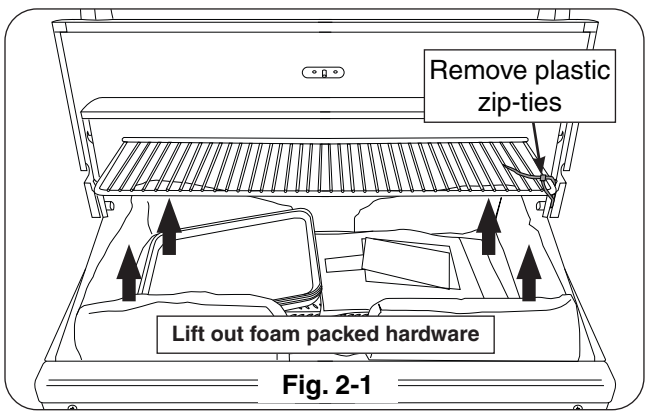

Fig. 2-1

3-Installation

Location

Refer to the INSTALLATION REQUIREMENTS section of your grill owner's manual for complete details.

CAUTION: **Wind blowing into or across the rear oven lid vent (Fig. 3-2) can cause poor performance and/or dangerous overheating. Orient the grill so that the prevailing wind blows toward the front of the grill (Fig. 3-1).**

CAUTION: To prevent dangerous overheating, the rear of the unit must have a minimum clearance of 4" from any backsplash/non-combustible wall.

CORRECT

PLACE GRILL SO PREVAILING WIND BLOWS TOWARD FRONT OF GRILL
Fig. 3-1

INCORRECT

YOU MUST PROTECT REAR OVEN VENT FROM PREVAILING WIND
Fig. 3-2

Grill Placement

Slide the unit into the enclosure cutout. The control panel must be flush with the enclosure face as shown in Fig. 3-3. The front support adjustment screws MUST be used to provide support to the hangers. See Fig. 3-4.

Proper grill airflow (front-to-back) must be maintained as shown in Fig. 3-5. Do not block the 1" front air inlet. **It is not necessary to remove the control panel or knobs for installation.**

Connect Gas Supply

These quick start instructions assume a **natural gas or household propane** configured unit. **See main instructions for propane cylinder units.**

Note: This section is only an overview of installation to the gas supply. Refer to the grill owner's manual for complete grill installation details.

Turn OFF the gas supply at the source. Run the attached flex connector routed under the middle of the unit to the gas supply stub. Then connect the flex connector to the gas supply with a flare-to-NPT adapter (Fig. 3-6). Use a pipe joint compound resistant to all gasses on all NPT pipe fittings **except flare fittings.**

Turn all burner control knobs to the **OFF** position. Turn the gas supply on. Then carefully check all gas connections for leaks with a brush and half-soap/half-water solution before lighting. **NEVER USE A MATCH OR OPEN FLAME TO TEST FOR LEAKS.**

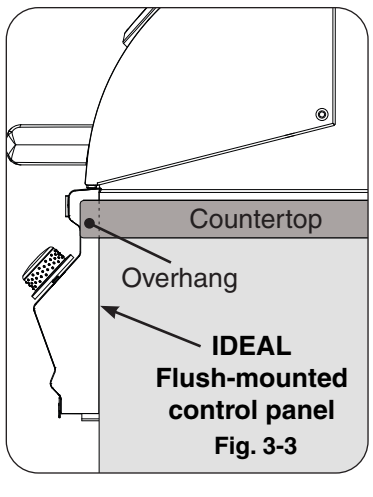

Fig. 3-3

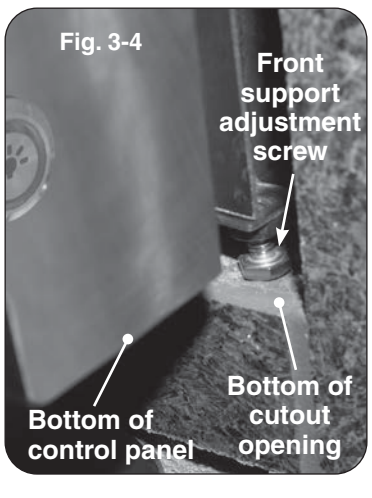

Fig. 3-4

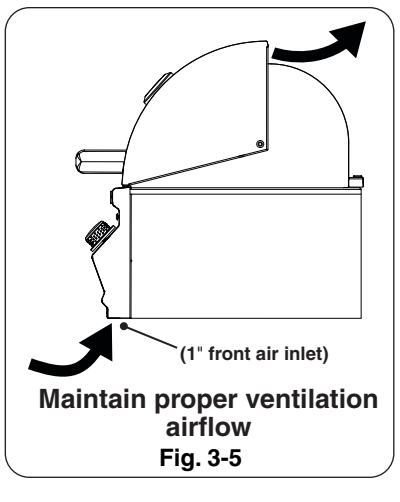

Maintain proper ventilation airflow
Fig. 3-5

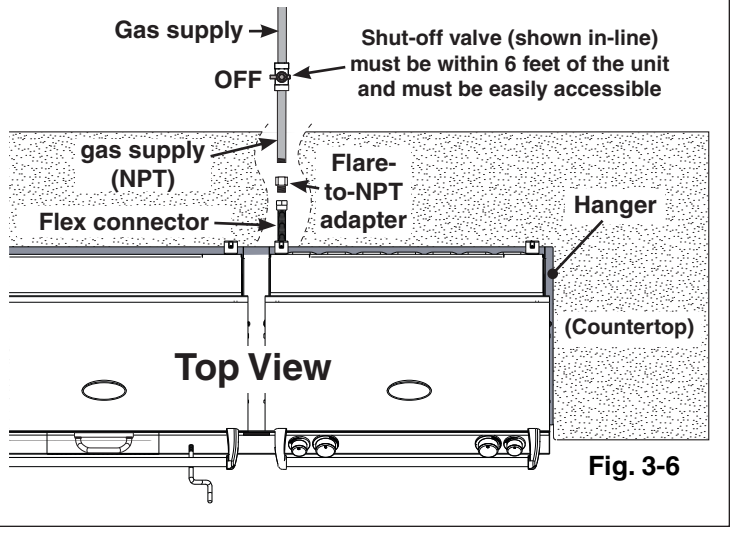

Fig. 3-6

4-Grill Setup

Note: For infrared burner equipped grills, see detailed instructions included in your owner's manual.

*** The burner ports and carry-over slots must be kept clean to ensure proper ignition and operation.**

Parts Placement Checklist

Place the following items according to their position and orientation in Fig. 4-1:

Crank, flavor grids, cooking grids, backburner cover (if equipped), and drip trays.

Leave pre-installed E-burners in place to maintain proper alignment.

Crank

Fit the crank handle into the hole located on the right side of the charcoal access door. Aligning it carefully, screw it into the nut on the frame. After installation, crank the handle in and out to raise and lower the charcoal pan.

Flavor Grids

Place the flavor grids directly onto the studs on the burners. Align the cutouts to the lighting tubes.

Cooking Grids

Place the cooking grids using the grid lifter.

Backburner Cover (if equipped)

Hook the backburner cover over the top of the backburner to protect the backburner from grease, dust and dirt when it is not in use. Remove cover before use.

Drip Trays

Charcoal Side: Place the heatshield (with the dimples facing downward) into the charcoal drip tray and insert the tray assembly into the opening found on the front bottom left of the control panel.

Gas Side: Place a liner into the drip tray and insert the drip tray assembly into the opening found on the front bottom right of the control panel.

IMPORTANT: See your grill owner's manual for complete installation details.

Replacement parts can be ordered from your local Fire Magic dealer.

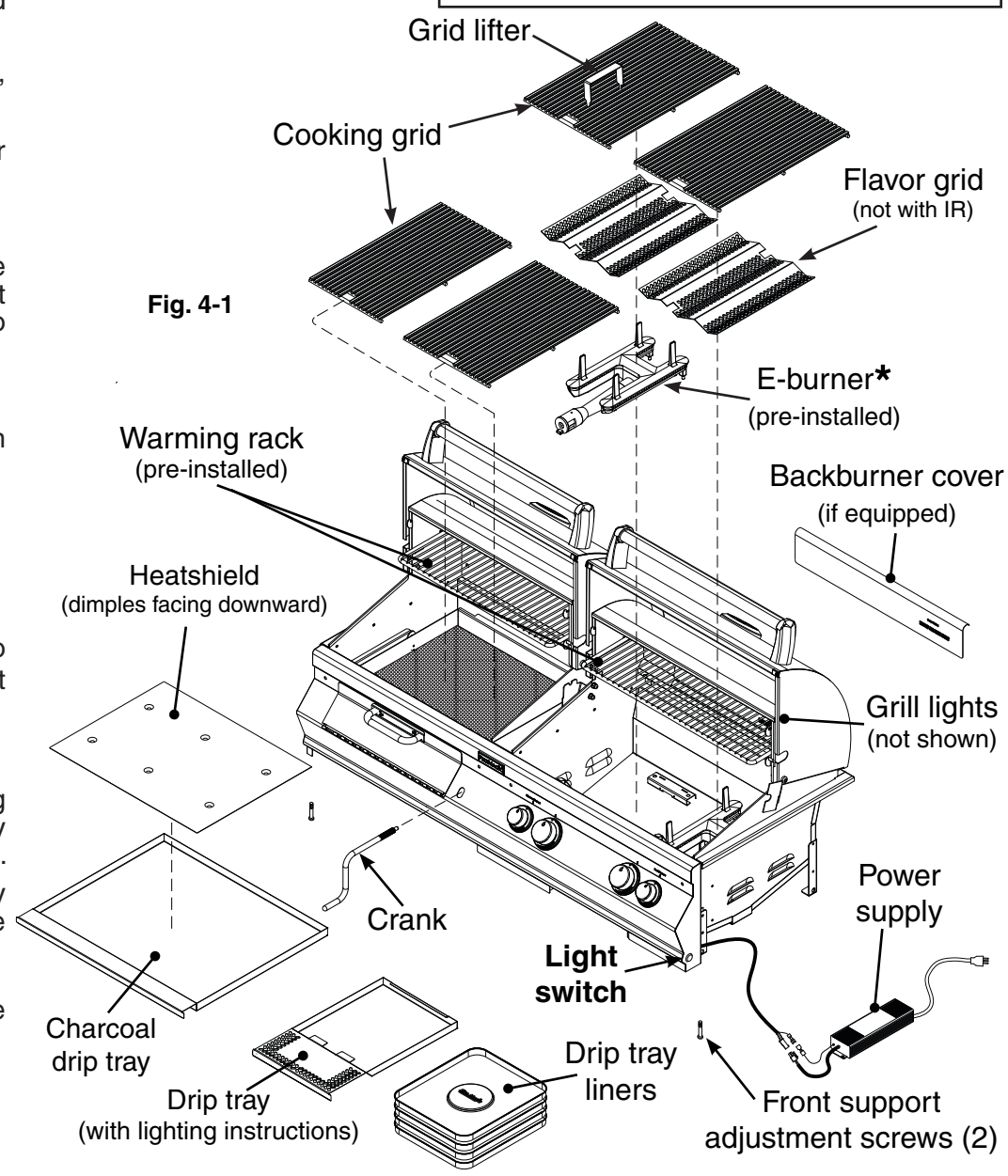

Fig. 4-1

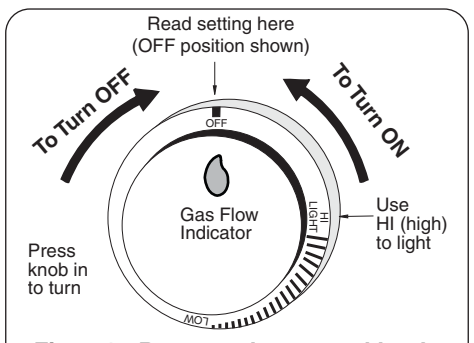

Fig. 5-1 - Burner valve control knob

For your convenience and safety; when the control knob is turned to the ON position, the gas flow indicator will change from blue to red. (Red indicates gas flow.) See Fig. 5-1.

WHEN OPERATING THIS GAS APPLIANCE, ALL INSTRUCTIONS AND WARNINGS MUST BE OBSERVED. FAILURE TO DO SO MAY RESULT IN A FIRE OR EXPLOSION CAUSING PROPERTY DAMAGE, BODILY INJURY, OR DEATH.

‡ The light switch is push button operated, and is located on the right side of the control panel (see Fig. 5-2). It controls the power to all lights.

5-Test

Note: This unit must be connected to 120VAC power for electronic lighting.

1. Open lid(s) or remove cover(s) from burner(s) to be lit.
2. Turn all gas control knob(s) to their **OFF** position(s).
3. Turn on the gas at its source.

Note: DO NOT turn on more than one valve at a time for either electronic or manual lighting.

4. Depress the desired control knob **for 5 seconds**. Ensure the igniter is glowing (inside of lighting tube), then, while pressing turn it counterclockwise to the **HI LIGHT** position. Once the burner lights, release the knob.

CAUTION: If a burner does not light within five (5) *seconds* of turning on the control knob, depress the knob and turn it to the **OFF** position. **WAIT FIVE (5) *MINUTES*** before repeating step 4. If you smell gas, follow the instructions on the cover of the grill owner's manual. If the burners still do not light after several attempts, refer to the grill owner's manual for manual lighting.

5. Repeat step 4 for each additional burner to be lit.

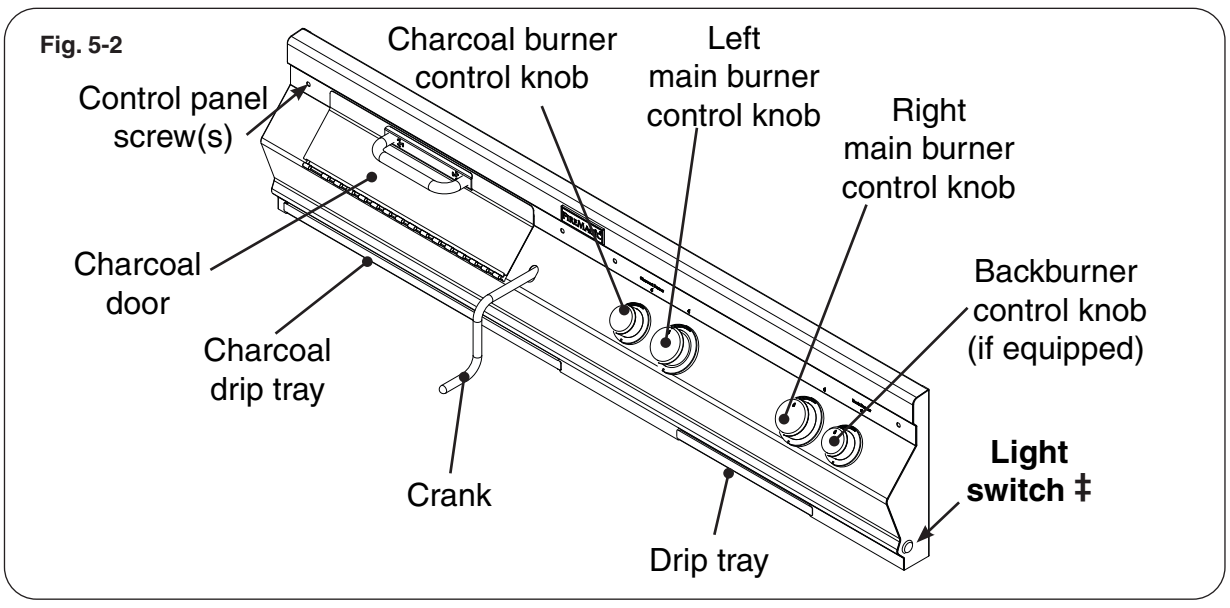

Fig. 5-2

6-Propane and Natural Gas Safety

FOR PROPANE CONFIGURATIONS; READ ALL SAFETY INSTRUCTIONS AND WARNINGS REGARDING THE USE OF PROPANE GAS FOUND IN YOUR OWNER'S MANUAL. FOR NATURAL GAS READ ALL SAFETY INSTRUCTIONS AND WARNINGS FOUND IN YOUR OWNER'S MANUAL.

7-Routine Maintenance

Your grill must be serviced and maintained properly to ensure optimal performance, appearance, and safety. Clean your grill before and after each use. Additionally, a deep clean of the entire grill and all its components be performed twice a year (or as needed depending on use). See owner's manual for details.