ECHELON DIAMOND THERMOMETER QUICK START GUIDE

This guide serves as a **supplement** to the thermometer information found in your grill main instructions. Read all instructions completely and carefully prior to product use.

YOU MUST READ THE ORIENTATION SECTION PRIOR TO DIGITAL THERMOMETER OPERATION.

I ORIENTATION

Familiarize yourself with the **thermometer, master switch, meat probe, and default screen.**

THERMOMETER

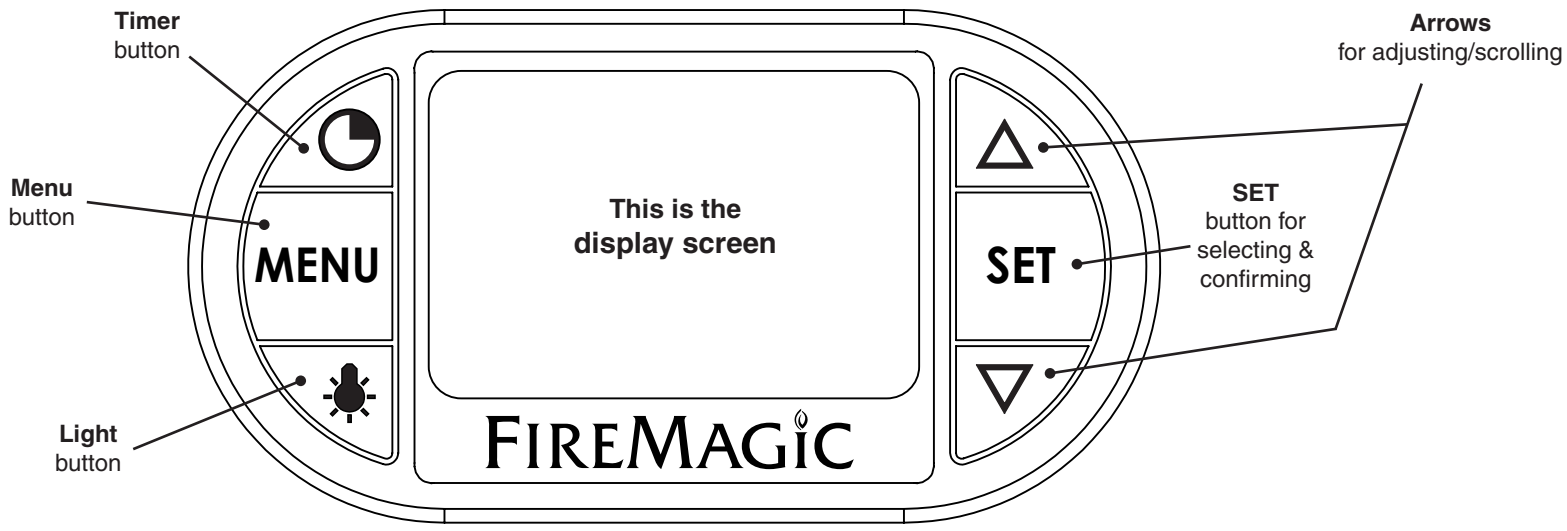

MASTER SWITCH & MEAT PROBE DETAIL

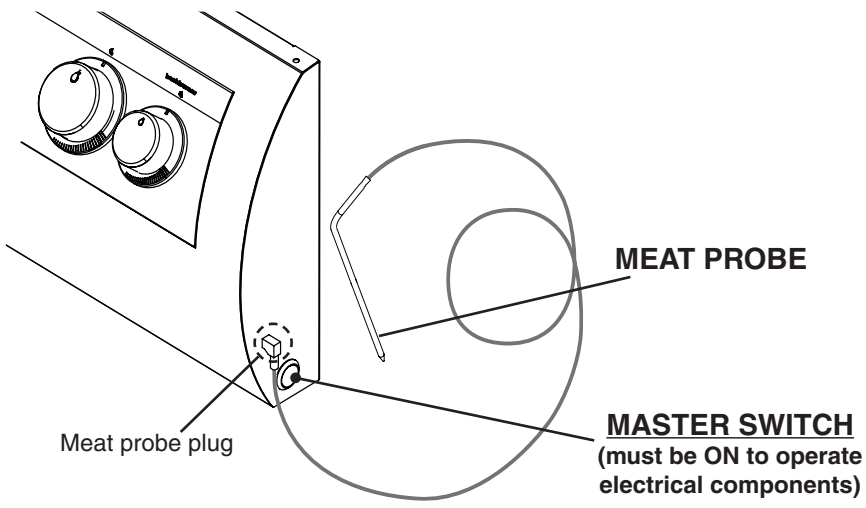

DEFAULT SCREEN DETAIL

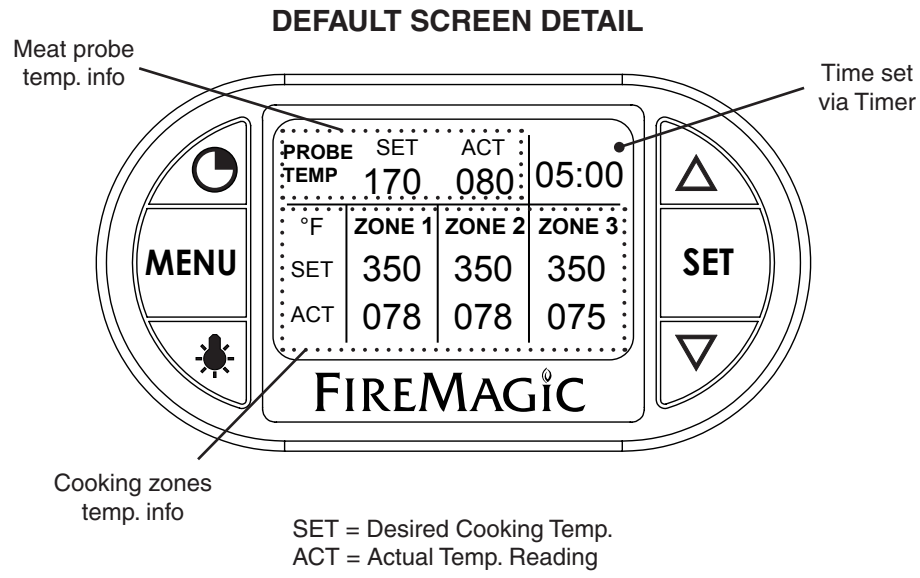

1. **Master switch** must be turned ON for all electrical components on your grill to operate. Turning Master switch off will shut down all electrical components.
2. Pressing **any** button will turn on the thermometer. Thermometer will automatically shut off after 5 minutes if no temperature change is detected.
3. You must turn thermometer on to turn interior oven lights and knob lights on. Automatic thermometer shutdown will not shut off these lights; they must be manually shut off (via the light button) as instructed in this guide.

II INTERIOR OVEN LIGHTS AND KNOB LIGHTS

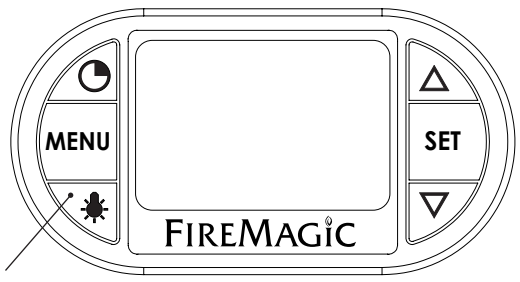

Press ON

1. Turn thermometer On. Press light button to turn both interior oven lights and knob lights On.

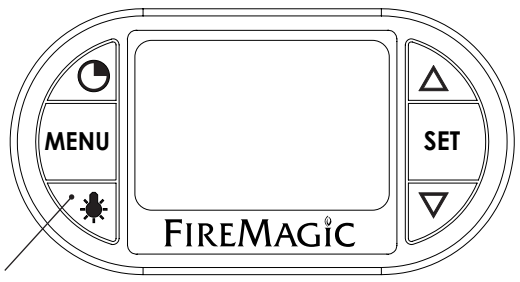

Press OFF (progressively)

2. Press light button once to turn interior oven lights off, and a second time to turn knob lights off.

III SET A ZONE AND/OR MEAT PROBE TEMP.

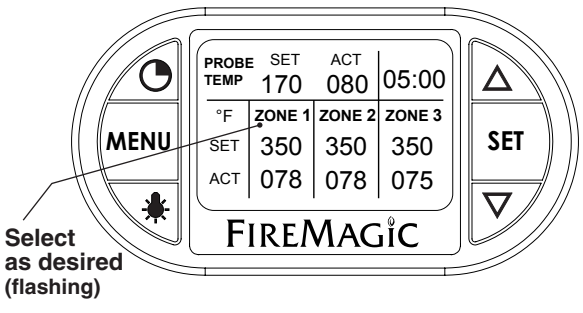

1. Turn thermometer On. Press down arrow to desired zone/meat probe area (flashing). Press **SET**.

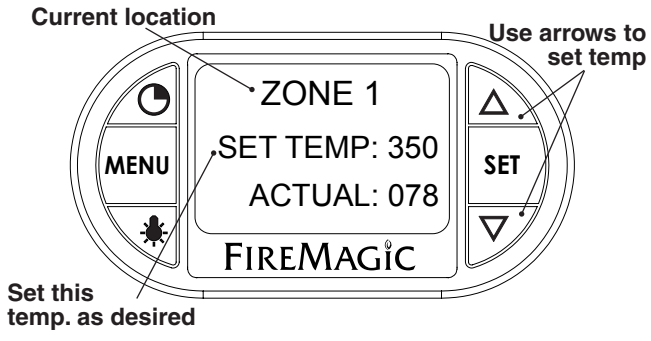

2. Press up/down arrow to set desired temp. Then press **SET**. Screen will return to default screen.

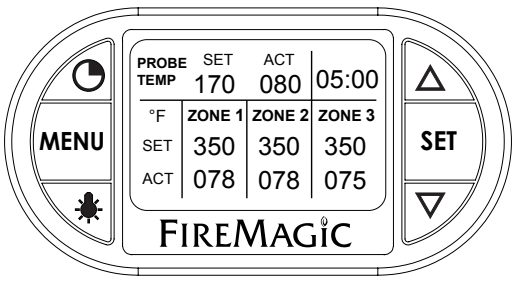

3. Repeat as necessary for all other areas. [Alarm will sound (if set to do so) when an area's actual temp reaches its set temp. Press any button to silence.]

IV GRILL GUIDE AND MEAT PROBE

1. Turn thermometer On. Press **MENU** button.

2. Press down arrow to GRILL GUIDE. Then press **SET**.

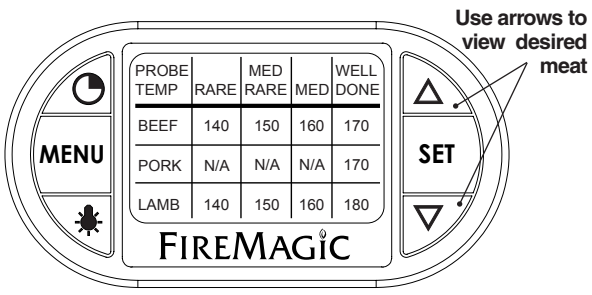

3. Press up/down arrow to view desired meat. Note temp. and press **SET.**

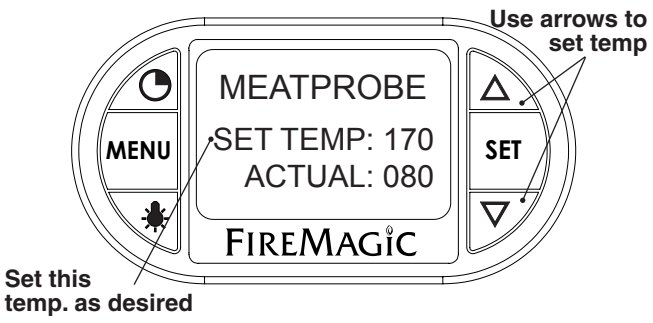

4. Press up/down arrow to set the noted temp. for the meat probe. Then press **SET**. Screen will return to default screen.

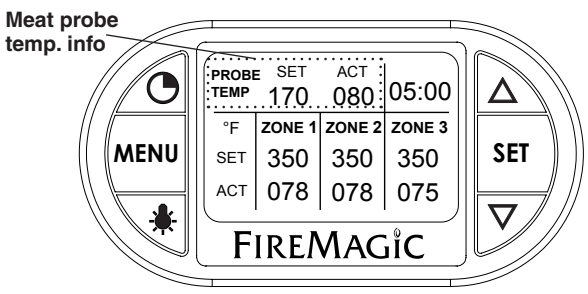

5. Inserting the meat probe into the cooking meat will give an actual temp. reading. [Alarm will sound (if set to do so) when the actual temp reaches the set temp. Press any button to silence.]

- **Meat probe may be left attached to meat for long-term use with oven hood closed.**
- **Probe tip must remain in center of thickest part of meat when in use. Leaving probe protruding through meat while hood is closed will damage probe.**
- **Avoid meat probe wire contact with hot cooking grids and continuous flame.**
- **Heat-resistant gloves <u>MUST</u> be worn when handling the hot meat probe.**
- **Meat probe must be dried completely before use.**

V SET TIMER

1. Turn thermometer On. Press the **timer** button.

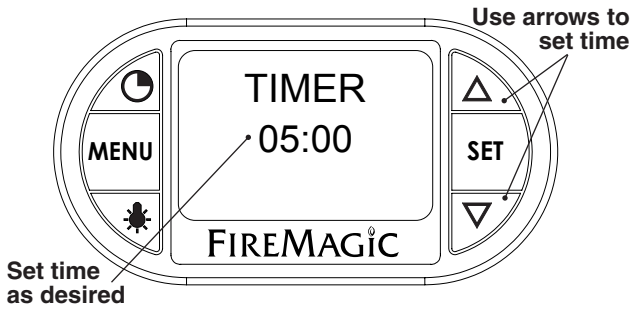

2. Press up arrow to set desired amount of time. Then press **SET**. Screen will return to default screen.

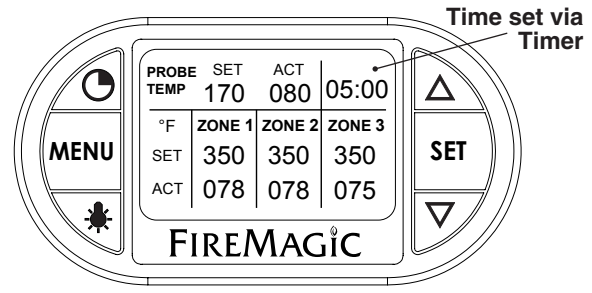

3. Time remaining will show. (Alarm will sound when the time reaches zero. Press any button to silence.)

VI SET ALARM ON/OFF (ZONES OR MEAT PROBE)

1. Turn thermometer On. Press the **MENU** button.

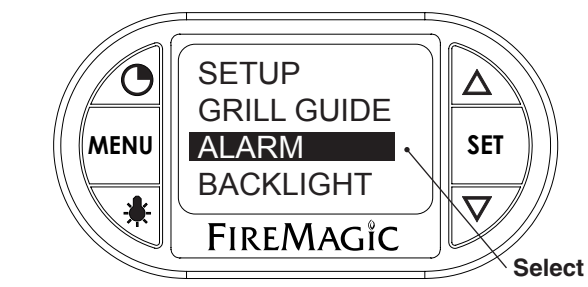

2. Press down arrow to ALARM. Then press **SET**.

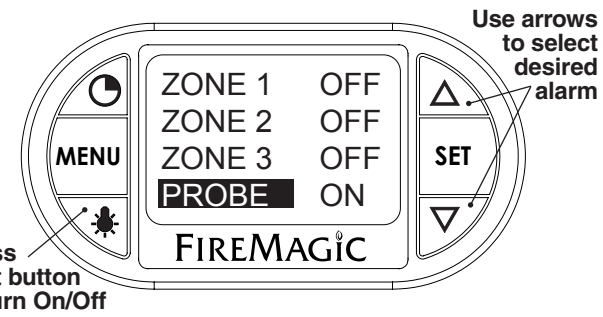

3. Use up/down arrow to select desired alarm, and <u>press light button</u> to turn alarm On/Off. Press **SET** to return to menu screen.

VI SET ALARM ON/OFF (CONTINUED)

4. Press **MENU** to return to default screen.

VII SET THERMOMETER BACKLIGHT

- ***Follow step 1 of the previous section (Alarm), THEN:***

1. Press down arrow to BACKLIGHT. Then press **SET**.

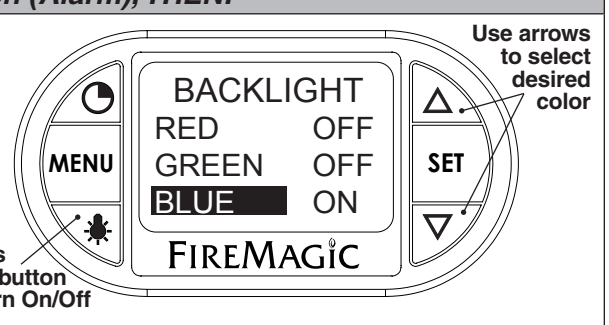

2. Use up/down arrow to select desired color, and <u>press light button</u> to turn color On/Off. Press **SET**; screen will return to menu screen. New color will show. <u>Various combinations result in different colors.</u>

VIII CHANGE TEMPERATURE SCALE

1. Turn thermometer On. Press **MENU** button.

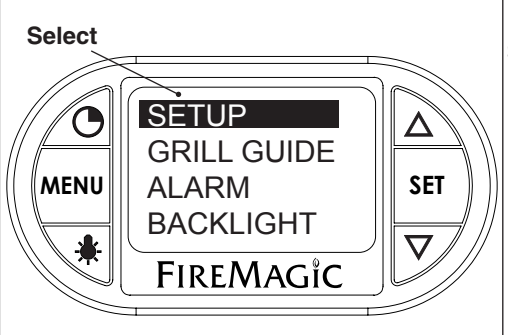

2. Press **SET**.

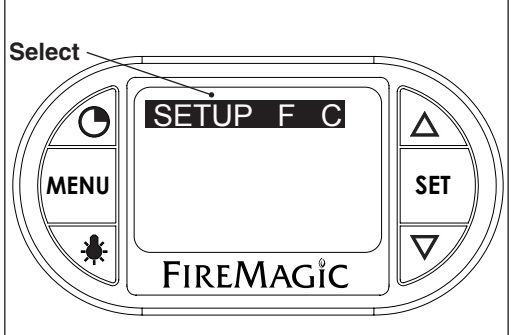

3. Press **SET**.

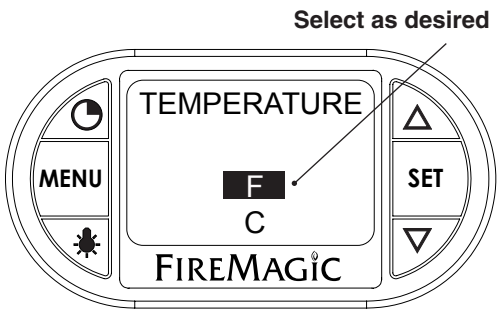

4. Select as desired & Press **SET**, screen will return to menu screen. Press **MENU** to return to default screen.