FIREMAGIC®

LEGACY
COLLECTION

REGAL I DROP-IN SERIES 34
OUTDOOR GAS GRILL

INSTALLATION AND OWNER'S MANUAL

INSTALLER: Leave these instructions with consumer.
CONSUMER: Retain for future reference.

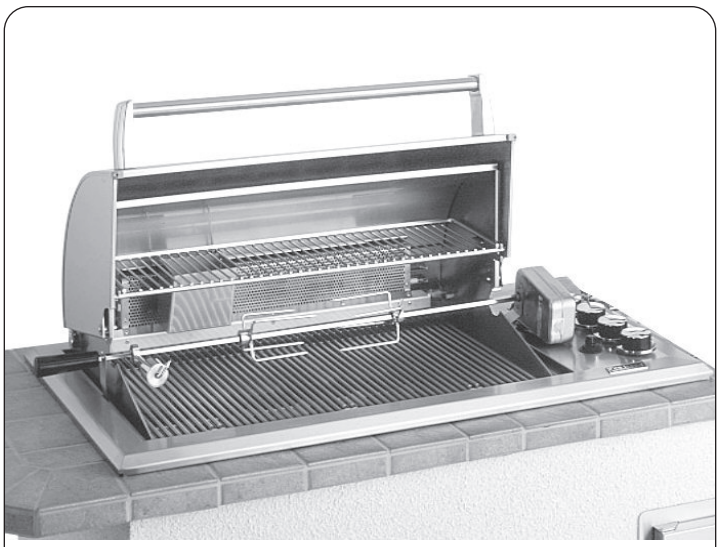

(Unit with optional backburner shown)

IMPORTANT: READ THESE INSTRUCTIONS CAREFULLY BEFORE STARTING INSTALLATION OR USE.

WARNINGS AND SAFETY CODES

⚠ DANGER:

IF YOU SMELL GAS:

- Shut off gas to the appliance.
- Extinguish any open flame.
- Open lid.
- If odour continues, keep away from the appliance and ***immediately*** call your gas supplier or the fire department.

ONLY TO BE USED OUTDOORS

CODE AND SUPPLY REQUIREMENTS: Installation must conform with local codes or, in the absence of local codes, with either the *National Fuel Gas Code*, ANSI 2223.1/NFPA 54, or the *Natural Gas and Propane Installation Code*, CSA B149.1, or the *Propane Storage and Handling Code*, CSA B149.2, as applicable.

The outdoor cooking gas appliance and its individual shut-off valve must be disconnected from the gas supply piping system during any pressure testing of that system at test pressures in excess of 1/2 psi (3.5 kPa).

The outdoor cooking gas appliance must be isolated from the gas supply piping system by closing its individual manual shut-off valve during any pressure testing of the gas supply piping system at test pressures equal to or less than 1/2 psi (3.5 kPa).

Proper operation of your grill requires prompt and periodic maintenance. See the SERVICING AND CLEANING section for details.

⚠ WARNING:

- Do not store or use gasoline or other flammable liquids or vapours in the vicinity of this or any other appliance.
- An LP cylinder not connected for use shall not be stored in the vicinity of this or any other appliance.

⚠ WARNING:

Improper installation, adjustment, alteration, service, or maintenance can cause injury or property damage. For proper installation, refer to the installation instructions. For assistance or additional information, consult a qualified professional service technician, service agency, or the gas supplier.

This appliance is designed as an <u>attended appliance</u>. <u>DO NOT</u> leave this appliance burning when unattended.

If an external electrical source is utilized, the outdoor cooking gas appliance, when installed, must be electrically grounded in accordance with local codes or, in the absence of local codes, with the *National Electrical Code*, ANSI/NFPA 70, or the *Canadian Electrical Code*, Part I, CSA C22.1.

Keep any electrical supply cord and the fuel supply hose away from any heated surfaces.

Cooking Grid U.S. Patent Nos. D857,453 D862,984

C US
1105502

Certified to:
ANSI Z21.58
CSA 1.6

FIREMAGIC

LEGACY
COLLECTION

REGAL I DROP-IN SÉRIE 34

GRIL À GAZ EXTÉRIEUR

INSTALLATION ET LE MANUEL DU PROPRIÉTAIRE

INSTALLATEUR: laissez ces instructions au consommateur.
CONSOMMATEUR: À conserver pour référence future.

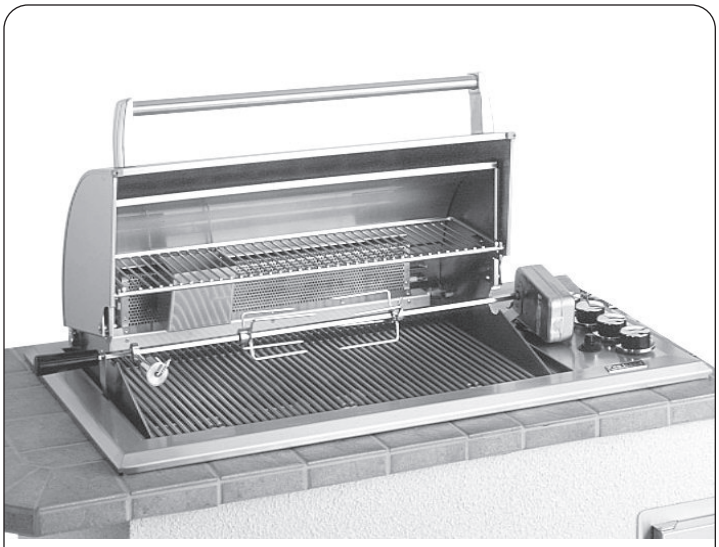

(Unité avec brûleur arrière en option illustré)

IMPORTANT: LIRE ATTENTIVEMENT CES INSTRUCTIONS AVANT DE COMMENCER L'INSTALLATION OU L'UTILISATION.

AVERTISSEMENTS ET CODES DE SÉCURITÉ

⚠ DANGER:

SI VOUS SENTEZ DU GAZ:

- Coupez le gaz de l'appareil.
- Éteignez toute flamme nue.
- Ouvrez le couvercle.
- Si l'odeur persiste, éloignez-vous de l'appareil et appelez ***immédiatement*** votre fournisseur de gaz ou les pompiers.

À UTILISER UNIQUEMENT À L'EXTÉRIEUR

EXIGENCES EN MATIÈRE DE CODE ET D'APPROVISIONNEMENT: L'installation doit être conforme aux codes locaux ou, en l'absence de codes locaux, soit au *National Fuel Gas Code*, ANSI 2223.1/NFPA 54, soit au *Natural Gas and Propane Installation Code*, CSA B149.1, soit au *Code de stockage et de manipulation du propane*, CSA B149.2, selon le cas.

L'appareil de cuisson au gaz extérieur et son robinet d'arrêt individuel doivent être déconnectés du système de tuyauterie d'alimentation en gaz pendant tout essai de pression de ce système à des pressions d'essai supérieures à 1/2 psi (3,5 kPa).

L'appareil de cuisson au gaz extérieur doit être isolé du système de tuyauterie d'alimentation en gaz en fermant son robinet d'arrêt manuel individuel pendant tout test de pression du système de tuyauterie d'alimentation en gaz à des pressions d'essai égales ou inférieures à 1/2 psi (3,5 kPa).

Le bon fonctionnement de votre gril nécessite un entretien rapide et périodique. Voir la section ENTRETIEN ET NETTOYAGE pour plus de détails.

⚠ ATTENTION:

- N'entreposez pas et n'utilisez pas d'essence ou d'autres liquides ou vapeurs inflammables à proximité de cet appareil ou de tout autre appareil.
- Une bouteille de GPL non connectée pour utilisation ne doit pas être stockée à proximité de cet appareil ou de tout autre appareil.

⚠ ATTENTION:

Une installation, un réglage, une modification, un entretien ou une maintenance inappropriés peuvent causer des blessures ou des dommages matériels. Pour une installation correcte, reportez-vous aux instructions d'installation. Pour obtenir de l'aide ou des informations supplémentaires, consultez un technicien de service professionnel qualifié, une agence de service ou le fournisseur de gaz.

Cet appareil est conçu comme un <u>appareil surveillé</u>. <u>NE PAS</u> laisser cet appareil brûler sans surveillance.

Si une source électrique externe est utilisée, l'appareil à gaz de cuisson extérieur, lorsqu'il est installé, doit être mis à la terre conformément aux codes locaux ou, en l'absence de codes locaux, avec le *National Electrical Code*, ANSI/NFPA 70, ou le *Canadian Electrical Code*. Code, Partie I, CSA C22.1. Gardez tout cordon d'alimentation électrique et le tuyau d'alimentation en carburant à l'écart de toute surface chauffée.

Grille de cuisson US
Numéros de brevet
D857,453
D862,984

C US
1105502

Certifié à:
ANSI Z21.58
CSA 1.6

CONTENTS

GETTING STARTED

AVERTISSEMENTS 4
INSTALLATION, OPERATION, AND SAFETY INFORMATION 5
GAS SAFETY INFORMATION 6
WARNING 6
WHEN USING PROPANE GAS 6
WHEN USING NATURAL GAS 6
INSTALLATION SAFETY GUIDELINES 6
OPERATING THE UNIT SAFELY AND CORRECTLY 6
SAFE USE & MAINTENANCE OF PROPANE GAS CYLINDERS 7
ENCLOSURE REQUIREMENTS 11
ENCLOSURE PARAMETERS 11
NOTES PAGE 16
INSTALLATION REQUIREMENTS 17
OVERHEAD CONSTRUCTION AND EXHAUST HOOD REQUIREMENTS 17
REAR WALL CLEARANCES 18
BACKSPLASH CLEARANCE (if applicable) 18
COMBUSTION AIR AND COOLING AIRFLOW 19
DIAGRAMMATICAL REPRESENTATIONS OF OUTDOOR AREAS 20
MODEL SPECIFICATIONS 21
REGAL I GRILL REPLACEMENT PARTS LIST 23

INSTALLATION

INSTALLATION 25
CONSTRUCT ENCLOSURE 25
INSTALL INSULATING LINER (if applicable) 25
LOWER UNIT INTO ENCLOSURE CUTOUT 25
LEAK TEST 27
INSTALL DRIP TRAY 27
SECURE GRILL TO COUNTERTOP 27
INSTALL FLAVOR GRIDS 27
INSTALL COOKING GRIDS 28
INSTALL WARMING RACK 28
INSTALL BACKBURNER COVER 28
OPERATION TEST 28

USE, CARE, & SERVICE

IDENTIFICATION OF GRILL CONTROLS 29
USING THE GRILL 30
LIGHTING (IGNITION) INSTRUCTIONS 31
ELECTRONIC LIGHTING 31
MANUAL LIGHTING 31
SHUTTING OFF THE UNIT 31
ROTISSERIE INSTRUCTIONS 33
WOOD CHIP SMOKER BOX (IF EQUIPPED) 34
SERVICING AND CLEANING 35
CLEANING YOUR GRILL 35
TOP PANEL REMOVAL 37
IGNITER BATTERY REPLACEMENT 38
RUBBER CAP 38
MAIN BURNER REMOVAL 38
CHECKING AND CONVERTING GAS TYPE 39
CHECKING AND CONVERTING THE REGULATOR 39
CHECK/CONVERT BURNER ORIFICES 40
CHECK/CONVERT BACKBURNER ORIFICES (if equipped) 40
AIR SHUTTER ADJUSTMENT / BURNER FLAME INSPECTION 42
VALVE "LOW" SETTING ADJUSTMENT 44
TROUBLESHOOTING 45
WARRANTY 46

⚠ AVERTISSEMENTS

Avertissements généraux :

- Cet appareil est destiné à une utilisation en extérieur uniquement. Si l'appareil est entreposé à l'intérieur, retirez les bouteilles et gardez-les à l'extérieur.
- Ne couvrez pas immédiatement l'appareil après utilisation. Laissez-le refroidir avant de le couvrir, de le déplacer ou de le ranger. Ne pas respecter cette mesure de sécurité pourrait entraîner un incendie causant des dommages matériels, des blessures ou la mort.
- Ne pas utiliser cet appareil sous une surface combustible.
- Ne pas utiliser cet appareil sous un auvent. Le non respect de cette mesure de sécurité pourrait entraîner un incendie ou des blessures.
- Distance minimale requise entre les parois latérales et arrière de l'appareil et toute construction combustible (45,7 cm à partir des parois latérales et 45,7 cm à partir de l'arrière). Veuillez consulter la section des distances de sécurité pour tous les détails.
- Un régulateur de pression de gaz doit être utilisé avec cet appareil de cuisson à gaz pour l'extérieur. Ce régulateur doit être réglé pour une pression de sortie de 5 pouces colonne d'eau pour le gaz naturel et de 10 pouces pour le propane. Veuillez consulter la liste des pièces de ce manuel du propriétaire pour vérifier si un régulateur est inclus avec votre appareil.
- LE RÉGULATEUR DOIT ÊTRE ÉVALUÉ POUR UN MAXIMUM DE 1/2 (LIVRES PAR POUCES CARRÉS). Veuillez consulter la liste des pièces de ce manuel du propriétaire pour vérifier si un régulateur est inclus avec votre appareil. SI VOTRE OFFRE DE GAZ EST SUPÉRIEURE DE 1/2 (LIVRES PAR POUCES CARRÉS), UN RÉGULATEUR ADDITIONNEL DOIT ÊTRE INSTALLÉ AVANT L'UTILISATION DE L'APPAREIL. VEUILLEZ CONSULTER LA SECTION DES CONDITIONS D'ALIMENTATION EN GAZ POUR LA PRESSION APPROPRIÉE DE L'ALIMENTATION EN GAZ.
- Ne couvrez jamais la surface entière de cuisine ou de gril de gauffreuses ou de casseroles. La surchauffe se produira et les brûleurs ne seront pas très performants quand la chaleur de combustion est emprisonnée au-dessous de la surface à cuire.
- Ne jamais pulvériser d'eau sur une unité de gaz chaude, car cela peut endommager les surfaces ou les composants.

Avertissements de propane :

- Une fuite de GPL peut causer une incendie ou une explosion si enflammée entraînant des blessures corporelles graves ou la mort.
- Communiquez avec le fournisseur de GPL pour les réparations ou pour disposer de qules bouteille ou du GPL non utilisé.

INSTALLATION, OPERATION, AND SAFETY INFORMATION

1. Wear gloves and use extreme caution whenever installing and handling this product and its accessories as certain components have sharp edges that can cause personal injury.
2. The outdoor appliance and surrounding area MUST remain clear of flammable substances such as gasoline, yard debris, wood, etc. Maintain a minimum horizontal clearance of 18" (in all directions) from combustible materials/items.
3. Do not block the air inlets around the inside edges of the top panel. See the COMBUSTION AIR AND COOLING AIRFLOW section under INSTALLATION REQUIREMENTS for details.
4. **This unit must be installed so that the required vent openings and surrounding area of the enclosure remain clear and free at all times. See the ENCLOSURE REQUIREMENTS section for details.**
5. **When using propane gas: the propane cylinder, regulator, and rubber hose must be in a location not subject to temperatures above 125° F (51° C).**
6. The back burner cover (if equipped) must be removed before using the burner.
7. Before each use, ensure the flames on each burner burn evenly along the entire burner with a steady flame (mostly blue). If burner flames are not normal, check and clean the orifice and burner/venturi tubes for insects and insect nests. A clogged tube can lead to a fire beneath the unit. A proper flame pattern will ensure safe operation and optimal performance. Adjust the air shutter as needed to achieve proper flame pattern (see AIR SHUTTER ADJUSTMENT/BURNER FLAME INSPECTION section, under SERVICING AND CLEANING for details).
8. The in-line gas valve or gas cylinder valve must always be shut OFF when the unit is not in use.
9. **Adults MUST be present when this gas appliance is operating. This appliance MUST NOT be left burning when unattended.**
10. **Do not store combustible materials in the enclosure directly beneath the appliance.**

⚠ WARNING

NEVER cover slots, holes, or passages in the oven bottom or cover an entire rack with material such as aluminum foil. Doing so blocks air flow through the oven and may cause carbon monoxide poisoning.

Aluminum foil linings may trap heat causing a fire hazard.

CAUTION: FOR YOUR SAFETY, you must provide openings in the enclosure for replacement air and ventilation (in case of possible leakage from gas connections or propane cylinders). Failure to do so may result in a fire or explosion causing property damage, bodily injury, or death. See the ENCLOSURE REQUIREMENTS section for details.

IMPORTANT: IN THE EVENT OF A GREASE FIRE, IMMEDIATELY SHUT OFF THE MAIN GAS VALVE TO THE UNIT. KEEP THE LID OPEN AND ALLOW THE FIRE TO EXTINGUISH ITSELF. KEEP AT A SAFE DISTANCE. A THOROUGH INSPECTION BY A QUALIFIED PROFESSIONAL SERVICE TECHNICIAN SHOULD BE CONDUCTED BEFORE FUTURE USE OF YOUR UNIT. THE SERVICE TECHNICIAN WILL CHECK THE SYSTEM FOR GAS LEAKS AND WILL CHECK ALL ELECTRICAL WIRING FOR DAMAGE. ALL GAS LEAKS AND WIRING MUST BE REPAIRED PRIOR TO FUTURE USE.

WARNING: NEVER cover more than 75% of the cooking or grill surface with griddles, pots, or pans. Overheating will occur, and burners will not perform properly when combustion heat is trapped below the cooking surface.

The grill serial number tag can be found affixed to the grill body underneath the top panel (on an aluminum tag). The unit rating label is located on the underside of the top panel. See the TOP PANEL REMOVAL section to gain access.

GAS SAFETY INFORMATION

WHEN OPERATING THIS GAS APPLIANCE, ALL INSTRUCTIONS AND WARNINGS MUST BE OBSERVED. FAILURE TO DO SO MAY RESULT IN A FIRE OR EXPLOSION CAUSING PROPERTY DAMAGE, BODILY INJURY, OR DEATH.

WARNING

This gas appliance and its enclosure MUST be plumbed and vented in accordance with local building and safety codes and should be approved by local code enforcement officials. This appliance MUST be installed and operated according to the information below.

FAILURE TO PROPERLY VENT THE ENCLOSURE MAY RESULT IN A FIRE OR EXPLOSION CAUSING PROPERTY DAMAGE, BODILY INJURY, OR DEATH.

A leaking gas connection or valve unintentionally left open will create a hazard.

WHEN USING PROPANE GAS

- **Propane gas** (also known as **L.P. gas**) is heavier than air and will accumulate or pool in an inadequately vented enclosure or recessed area.
- If a pool of **propane gas** is ignited, an explosion will occur. Adequate venting at the floor level, or the lowest point where gas could accumulate, will eliminate this danger.

  Refer to the **ENCLOSURE REQUIREMENTS** section.
  Observe all local codes.
- DO NOT store a spare propane-gas cylinder under or near the enclosure.

WHEN USING NATURAL GAS

- **Natural gas** is lighter than air and will accumulate at the top of an inadequately vented enclosure.
- If an accumulation of **natural gas** is ignited, an explosion will occur. Adequate venting at the top of the enclosure, or the highest point where gas could accumulate, will eliminate this danger.

  Refer to the **ENCLOSURE REQUIREMENTS** section.
  Observe all local codes.

INSTALLATION SAFETY GUIDELINES

THIS UNIT MUST BE INSTALLED SO THAT THE REQUIRED VENT OPENINGS AND SURROUNDING AREA OF THE ENCLOSURE REMAIN CLEAR AND FREE AT ALL TIMES. See the ENCLOSURE REQUIREMENTS section for details.

CAUTION: FOR YOUR SAFETY, you must provide openings in the enclosure for replacement air and ventilation (in case of possible leakage from gas connections or propane cylinders). Failure to do so may result in a fire or explosion causing property damage, bodily injury, or death. See the ENCLOSURE REQUIREMENTS section for details.

The gas cylinder, regulator, and rubber hose must be in a location not subject to temperatures above 125° F (51° C).

IF A PROPANE CYLINDER IS INSTALLED INSIDE OF THE ENCLOSURE, THE GUIDELINES FOUND IN THE **ENCLOSURE REQUIREMENTS** SECTION MUST BE FOLLOWED.

OPERATING THE UNIT SAFELY AND CORRECTLY

Every time you use the unit, **make sure that:**

1. The area around the unit is clear and free from combustible materials, gasoline and flammable vapours and liquids.
2. There is no blockage of the airflow through the vent openings located on the enclosure.
3. The hose is inspected (if applicable). See SAFE USE & MAINTENANCE OF PROPANE-GAS CYLINDERS section.

DO NOT store any combustible materials, gasoline, and any other flammable vapours/liquids in the vicinity of the unit. Provide adequate clearance for servicing and operation.

SAFE USE & MAINTENANCE OF PROPANE GAS CYLINDERS

IMPORTANT FOR YOUR SAFETY
READ AND FOLLOW ALL WARNINGS PROVIDED WITH THE PROPANE-GAS CYLINDER.
When operating this appliance with a propane-gas cylinder, these instructions and warnings **MUST** be observed.
FAILURE TO DO SO MAY RESULT IN A SERIOUS FIRE OR EXPLOSION.

For requirements related to ventilation, L.P. Cylinders, and the enclosure, see the ENCLOSURE REQUIREMENTS section.

CYLINDER/CONNECTOR REQUIREMENTS

a. Propane-gas cylinders, valves, and hoses must be maintained in good condition and inspected before each use of appliance. They must be replaced if there is any visible damage. If hose is cut or shows excessive abrasion or wear, it must be replaced before using appliance (see **e**.).

b. This unit, when used with a cylinder, should be connected to a standard 5-gallon (20 lb.) propane-gas cylinder equipped with a listed overfilling prevention device. The device has been required on all cylinders sold since October 1,1998, to prevent overfilling.

c. Cylinder dimensions should be approximately 12" (30.5 cm) in diameter and 18" (45.7 cm) high. Cylinders must be constructed and marked in accordance with the U.S. Department of Transportation (D.O.T.) *Specifications for LP-Gas Cylinders,* or the Standard for *Cylinders, Spheres, and Tubes for Transportation of Dangerous Goods and Commission,* CAN/CSA-B339, as applicable.

d. The cylinder used must include a collar to protect the cylinder valve. The cylinder supply system must be arranged for vapour withdrawal. See Fig. 7-1.

e. When used with a cylinder, the gas supply system must be used with a pressure regulator. The pressure regulator and hose assembly **(not supplied)** used must match the specification for Type I by ANSI Z 21.58/CGA 1.6 and must comply with UL 144 as a part of the self-contained LP gas supply system (see Fig. 7-1).

f. The propane-gas cylinder valve must be equipped with a cylinder connection device, described as Type I in the standard defined in paragraph **e**. above. This device is commonly described as an Acme thread coupler.

g. If the cylinder comes with a dust plug, place it on the cylinder valve outlet whenever the cylinder is not in use. Only install the type of dust cap on the cylinder valve outlet that is provided with the cylinder valve. Other types of caps or plugs may result in leakage of propane.

COUPLER OPERATION

To connect the regulator/hose assembly to the propane-gas cylinder valve fitting: Press the hand nut on the regulator over the Acme thread fitting on the cylinder valve. Turn the hand nut clockwise to engage the threads and tighten until snug. The use of pliers or a wrench should not be necessary. Only cylinders marked “propane” may be used.

To disconnect: Turn the hand nut counterclockwise until detached (Fig. 7-1).

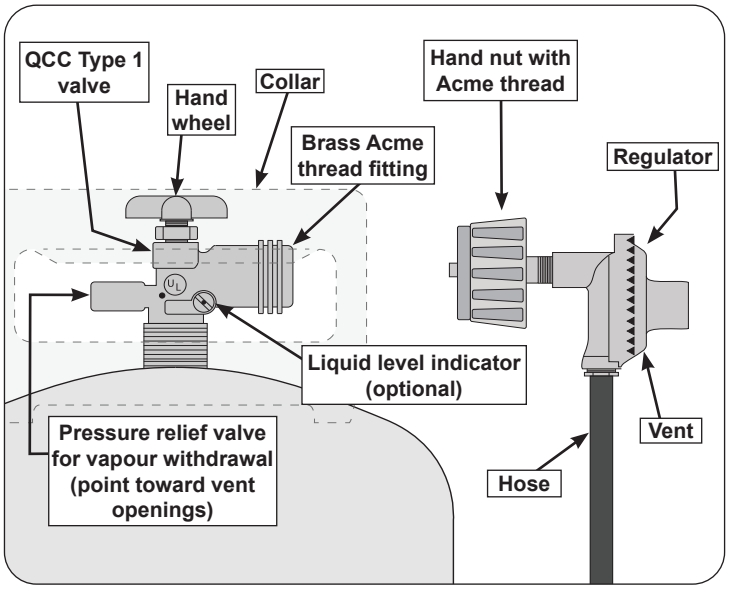

Fig. 7-1 Type I Acme thread coupler

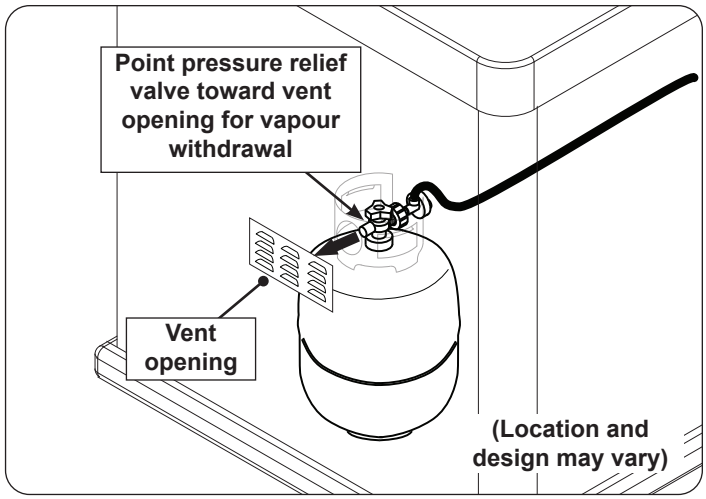

Fig. 7-2 Vapour withdrawal detail

UTILISATION SÛRE ET ENTRETIEN DES CYLINDRES DE GAZ DE PROPANE

IMPORTANT POUR VOTRE SÛRETÉ

LISEZ ET SUIVEZ TOUS LES AVERTISSEMENTS ÉQUIPÉS DE VOTRE CYLINDRE DE GAZ DE PROPANE.

En actionnant cet appareil avec un cylindre de gaz de propane ON DOIT observer ces instructions et avertissements.

LE MANQUE DE FAIRE AINSI PEUT AVOIR COMME CONSÉQUENCE UNE INCENDIE OU UNE EXPLOSION SÉRIEUSE.

Pour les exigences relatives à la ventilation, aux bouteilles de GPL et à l'enceinte, reportez-vous à la section ENCLOSURE REQUIREMENTS.

CYLINDRE ET CONDITIONS ET CARACTÉRISTIQUES DE CONNECTEUR

a. Les bouteilles, les vannes et les tuyaux de propane doivent être entretenus et inspectés avant chaque utilisation. Ils doivent être remplacés en cas de dommages visibles. Si le tuyau est coupé ou présente des signes d'abrasion ou d'usure, il doit être remplacé avant utilisation (**voir e.**).

b. Cette unité, lorsqu'elle est utilisée avec une bouteille, doit être connectée à une bouteille standard de gaz propane de 5 gallons (20 lb) équipée d'un dispositif anti-débordement répertorié. L'appareil est obligatoire sur toutes les bouteilles vendues depuis le 1er octobre 1998 afin d'empêcher tout remplissage excessif.

c. Les dimensions du cylindre doivent être d'environ 12 " (30,5 cm) de diamètre et 18" (45,7 cm) de hauteur. Les bouteilles doivent être construites et marquées conformément aux spécifications du ministère des Transports (DOT) pour les bouteilles à gaz LP ou à la norme relative aux bouteilles, sphères et tubes pour le transport des marchandises dangereuses et à la Commission, CAN / CSA-B339, selon le cas.

d. La bouteille utilisée doit comporter un collier pour protéger le robinet de la bouteille. Le système d'alimentation de la bouteille doit être conçu pour le retrait de la vapeur. Voir Fig. 8-1.

e. Lorsqu'il est utilisé avec une bouteille, le système d'alimentation en gaz doit être utilisé avec un régulateur de pression. Le régulateur de pression et l'ensemble de tuyau **(non fourni)** utilisés doivent correspondre à la spécification de type I par ANSI Z 21.58/CGA 1.6 et doivent être conformes à UL 144 en tant que partie du système d'alimentation en gaz propane autonome (voir Fig. 8-1).

f. La valve de cylindre de gaz de propane doit être équipée d'un dispositif d'accouplement de raccordement de cylindre, décrit comme type I dans la norme définie dans le e. de paragraphe ci-dessus. Ce dispositif est généralement décrit comme coupleur de fil de point culminant.

g. Si la bouteille est livrée avec un bouchon anti-poussière, placez-le sur la sortie du robinet de la bouteille chaque fois que la bouteille n'est pas utilisée. Installez uniquement le type de capuchon anti-poussière sur la sortie du robinet de la bouteille qui est fourni avec le robinet de la bouteille. D'autres types de bouchons ou de bouchons peuvent entraîner des fuites de propane.

OPÉRATION DE COUPLEUR

Pour relier le regulator/hose à l'ajustage de précision de valve de cylindre de gaz de propane: Serrez l'écrou de main sur le régulateur au-dessus de l'ajustage de précision de fil de point culminant sur la valve de cylindre. Tournez l'écrou de main dans le sens des aiguilles d'une montre pour engager les fils et pour serrer jusqu'à ce que douillettement. L'utilisation des pinces ou de la clé ne devrait pas être nécessaire. Seulement le "propane" marqué par cylindres doit être employé.

Pour déconnecter: tournez l'écrou à main dans le sens antihoraire jusqu'à ce qu'il soit détaché (Fig. 8-1)

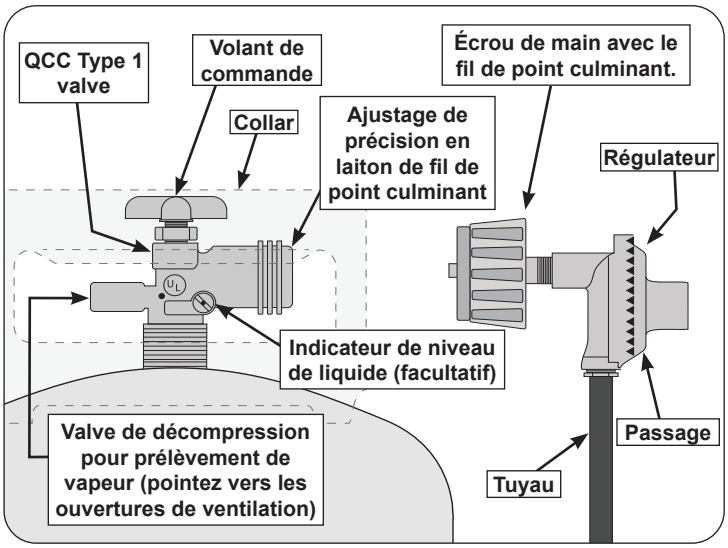

Fig. 8-1 Type coupleur de fil de point culminant d'I

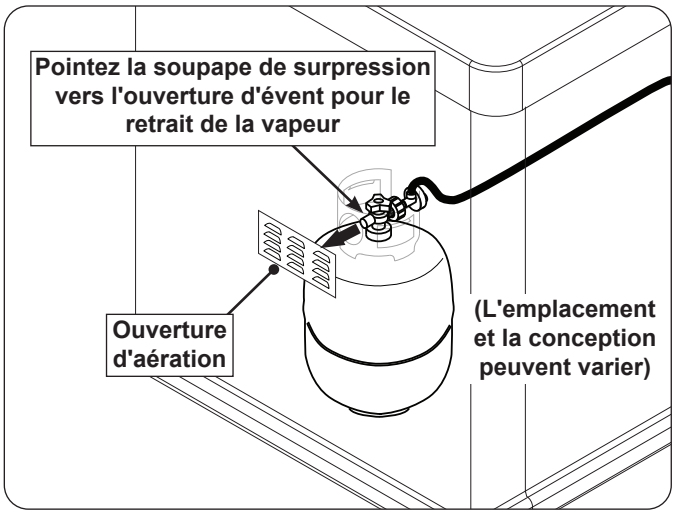

Fig. 8-2 Détail du retrait de vapeur

Important: Before using the unit, and after each time the cylinder is removed and reattached, check the hose for wear (see **a**.) and check all connections for leaks. Turn off the unit valves and open the main cylinder valve, then check connections with soapy water. Repair any leaks before lighting the unit.

CAUTION: Always turn the propane cylinder main valve off after each use, and before moving the unit and cylinder or disconnecting the coupling. This valve must remain closed and the cylinder disconnected while the appliance is not in use, even though the gas flow is stopped by a safety feature when the coupler is disconnected.

Carefully inspect the hose assembly each time before the gas is turned on. A cracked or frayed hose must be replaced immediately.

If the appliance is stored indoors, the cylinder must be disconnected and removed. Disconnected cylinders must be stored outdoors, out of the reach of children, with threaded valve plugs tightly installed, and must not be stored in a building, garage, or any other enclosed area.

FOR YOUR SAFETY

A. DO NOT store a spare propane-gas cylinder under or near this appliance.

B. NEVER fill the cylinder beyond 80-percent full.

C. IF THE INFORMATION IN **a.** AND **b.** IS NOT FOLLOWED EXACTLY, A FIRE CAUSING DEATH OR SERIOUS INJURY MAY OCCUR.

D. **CGA 791 connections on LP gas cylinders:** The cylinder face elastomeric face seal element on these devices could, over time, show marked and visible damage or deterioration that might cause a leak even with the connection tightened. A visual inspection for the seal must be carried out every time a LP gas cylinder is replaced or refilled. Any LP gas cylinder showing signs of damage or deterioration as illustrated in Fig. 9-1, including visible cracks and pitting, must be replaced.

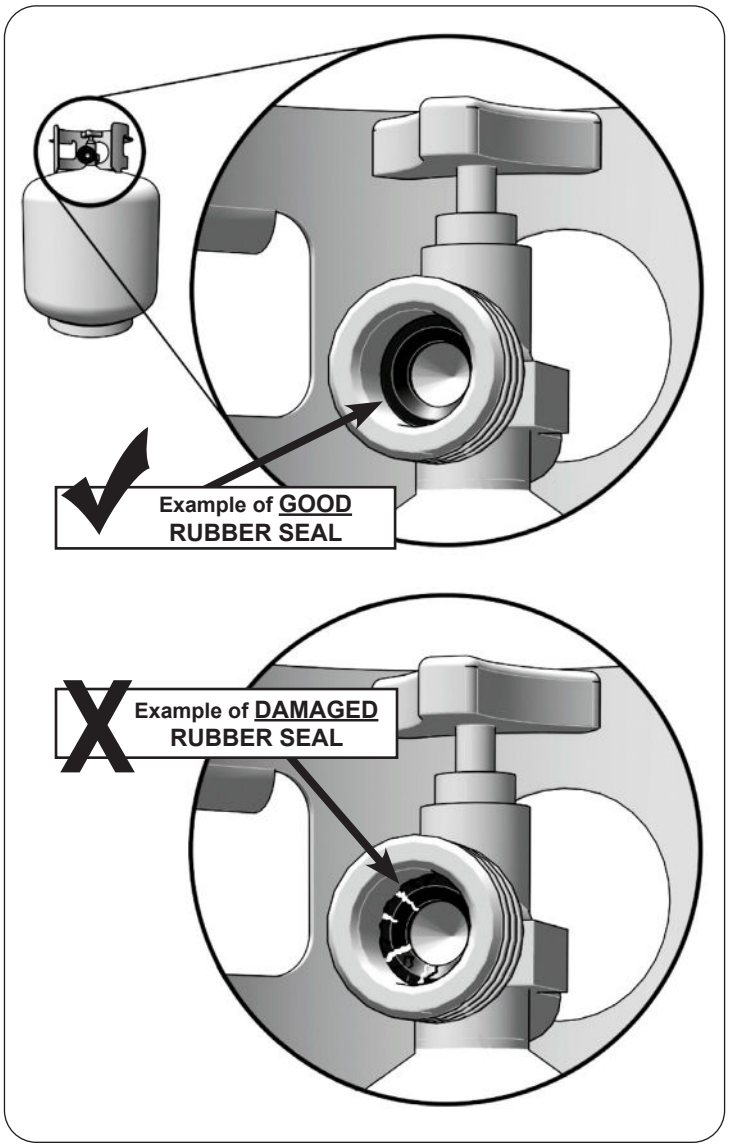

Fig. 9-1 Inspect rubber seal

Important: Avant d'employer le unité, et ensuite chaque fois que le cylindre est enlevé et rattaché, examinez tous les raccordements pour déceler les fuites. Arrêtez les valves de unité et ouvrez la valve principale de cylindre, puis vérifiez les raccordements avec de l'eau savonneux. Réparez toutes les fuites avant d'allumer le unité.

ATTENTION: Tournez toujours la valve principale de cylindre de propane au loin après chaque utilisation, et avant de déplacer le unité et le cylindre, ou débrancher l'accouplement. Cette valve doit rester fermée et le cylindre a débranché alors que l'appareil n'est pas en service, quoique l'écoulement de gaz soit arrêté par un dispositif de sûreté quand le coupleur est débranché.

Inspectez soigneusement l'ensemble de tuyau chaque fois avant que le gaz soit allumé. Un tuyau fissuré ou effiloché doit être immédiatement remplacé.

Si l'appareil est stocké à l'intérieur, le cylindre doit être disconnected et a enlevé. Des cylindres Disconnected doivent être stockés dehors, hors de la portée des enfants, avec les prises de valve filetées étroitement installées, et ne doivent pas être stockés dans un bâtiment, le garage, ou n'importe quel autre secteur inclus.

POUR VOTRE SÛRETÉ

a. Ne stockez pas un cylindre de gaz disponible de propane dessous ou ne vous approchez pas de cet appareil.

b. Ne remplissez jamais cylindre au delà de 80 pour cent de plein.

c. SI L'INFORMATION DANS "A" ET "B" N'EST PAS SUIVIE EXACTEMENT, UN FEU CAUSANT LA MORT OU DES DOMMAGES SÉRIEUX PEUT SE PRODUIRE.

d. **Connexions CGA 791 sur les bouteilles de GPL :** l'élément d'étanchéité en élastomère de la face de la bouteille de ces appareils peut, au fil du temps, présenter des dommages ou une détérioration marqués et visibles susceptibles de provoquer une fuite même avec la connexion serrée. Une inspection visuelle du joint doit être effectuée chaque fois qu'une bouteille de GPL est remplacée ou remplie. Toute bouteille de GPL présentant des signes de dommages ou de détérioration, tel qu'illustré à la Fig. 10-1, y compris des fissures et des piqûres visibles, doit être remplacée.

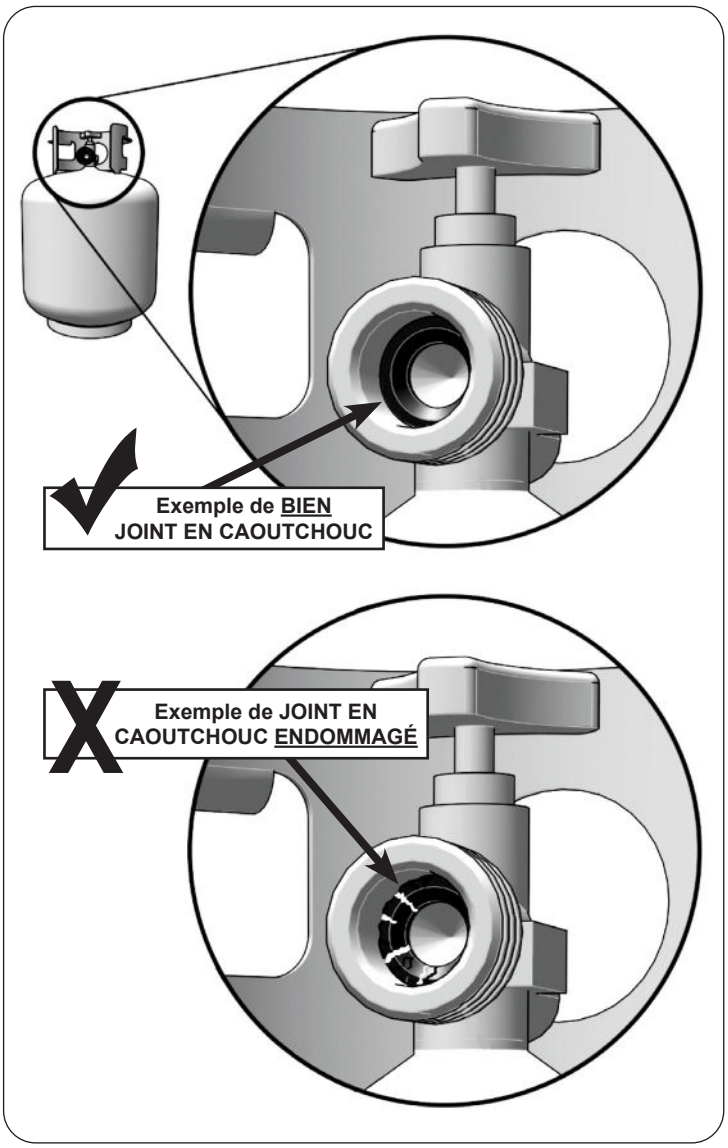

Fig. 10-1 Inspecter le joint en caoutchouc

ENCLOSURE REQUIREMENTS

For requirements regarding custom-built enclosures, see below.

To ensure proper operation and safety, the enclosure MUST comply with the following:

- Proper construction and cutout openings - see INSTALLATION REQUIREMENTS and ENCLOSURE PARAMETERS sections.
- Proper ventilation - see VENTILATION section.
- Proper clearances - see INSTALLATION REQUIREMENTS section.

You MUST read and follow these sections for complete enclosure requirement details.

ENCLOSURE PARAMETERS

General Guidelines

The enclosure can be constructed according to your individual preference, while following all guidelines found in this manual. **The enclosure MUST (see Fig. 11-1):**

- be installed on a hard and level surface
- be properly vented (see VENTILATION section)
- have a countertop that is non-combustible (enclosure may be combustible construction with proper provision*)
- have the minimum dimensions specified in Fig. 11-1
- have the minimum cutout dimensions (see CUTOUT DIMENSIONS section)
- have access to the interior for ease of installation and service (right side for drip tray and valve access)
- be setup so the unit is as close to the vent openings as possible
- be designed so that the grill is supported by the stainless-steel hanger extending from the upper portion of the unit (rests on all four sides, and the stabilizer screw (right rear corner of the frame assembly) - see INSTALLATION section
- have drainage cutouts (if needed) to prevent the accumulation of water within the enclosure
- meet all requirements found in Fig. 11-1 and the following sections

*** When installing this unit in a combustible enclosure, an approved insulating liner MUST be used. Reference Table 3 in the MODEL SPECIFICATIONS section for liner model #.**

When an L.P. cylinder is used in the enclosure, additional requirements exist, see the L.P. CYLINDER REQUIREMENTS section.

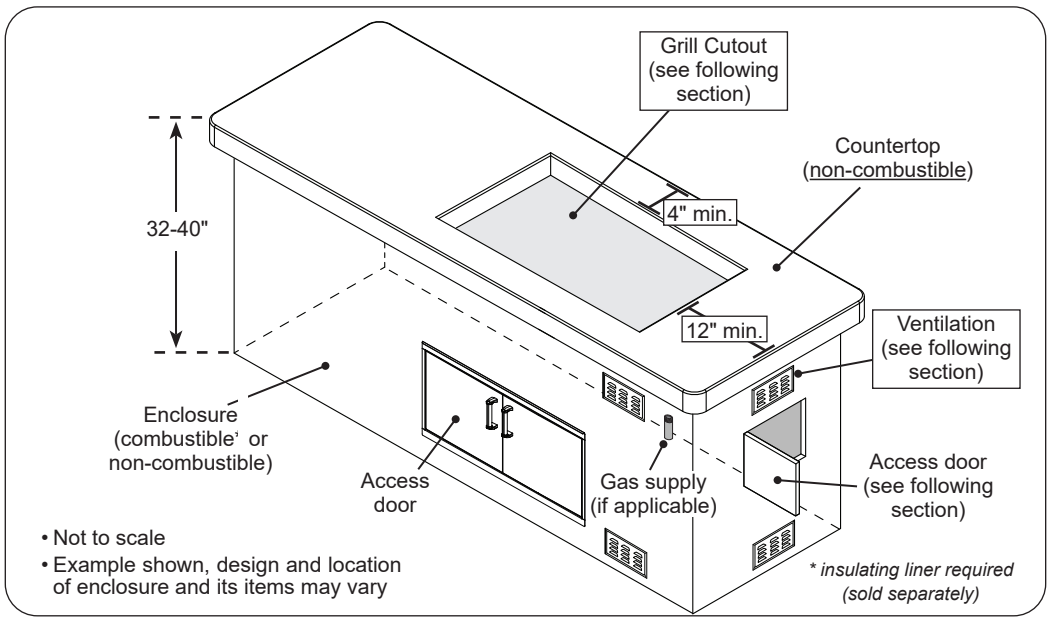

Fig. 11-1 Enclosure specifications

Ventilation

FOR YOUR SAFETY, you must provide the openings specific to your gas type for replacement air and ventilation of the enclosure (in case of possible leakage from gas connections and L.P. cylinders as applicable, and for heat dissipation). See the following sections for ventilation requirements specific to your gas type. Failure to provide proper ventilation for your gas type may result in a fire or explosion causing property damage, bodily injury, or death.

WARNING: Vent openings in side walls shall not communicate directly with other enclosures of the outdoor cooking gas appliance (see Fig. 12-1).

- **Ventilation openings shall not be located in front of the appliance above floor level.**
- **Every opening shall have a minimum dimension so as to permit the entrance of a 3/16" (4.8 mm) rod.**
- **The openings must remain unobstructed:**

  The clearance between the openings and any items outside of the enclosure is a minimum of 6". The clearance between the openings and any items within the enclosure is a minimum of 2". See Fig. 12-2.

KEEP THE REQUIRED VENT OPENINGS AND SURROUNDING AREA OF THE ENCLOSURE CLEAR AND FREE AT ALL TIMES.

Natural Gas Ventilation Requirements

When natural gas is used in the enclosure, the guidelines below MUST be followed:

One side of the enclosure shall be left completely open to the outside; OR 1 minimum vent opening (at top level) or 2 vent openings (1 at top and 1 at floor level) MUST be created (reference Fig. 12-3):

- **When using only 1 vent opening: the opening must be at top level and must have a minimum of 20 sq. in. of free area.**
- **When using 2 vent openings: The top and floor level openings must have a minimum of 10 sq. in. of free area each. The openings must be equally sized (ventilation total of 20 sq. in. free area).**
- The opening **at the top level** must begin 1" or less below the countertop level and end no more than 5" below the countertop level.
- If applicable, the opening **at the floor level** must begin 1" or less above the floor level and end no more than 5" above the floor level.
- If planning for 2 vent openings, it is acceptable to use RHP venting panels (PN 5510-01). Contact your dealer.

Note: These same requirements apply when multiple appliances exist in the enclosure.

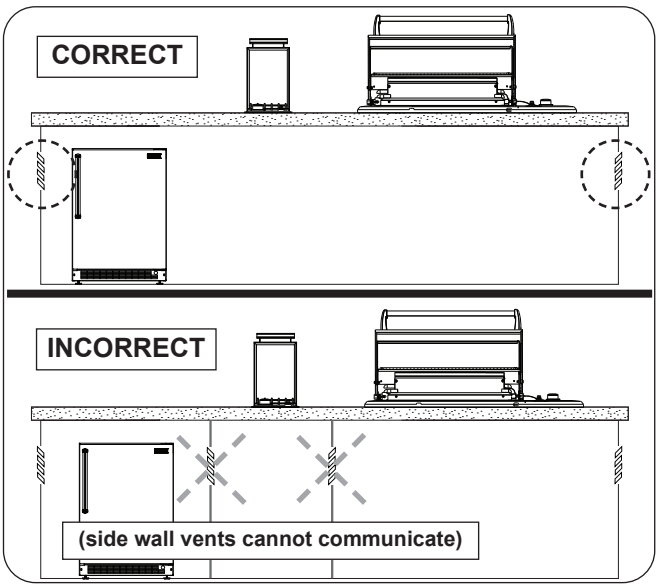

Fig. 12-1 Correct / Incorrect side wall venting

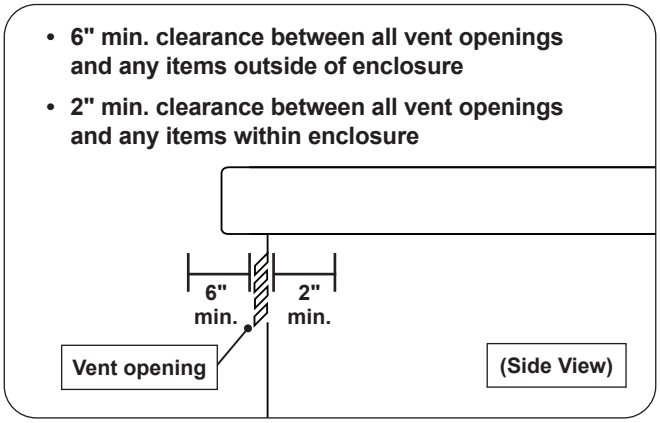

Fig. 12-2 Vent openings clearance

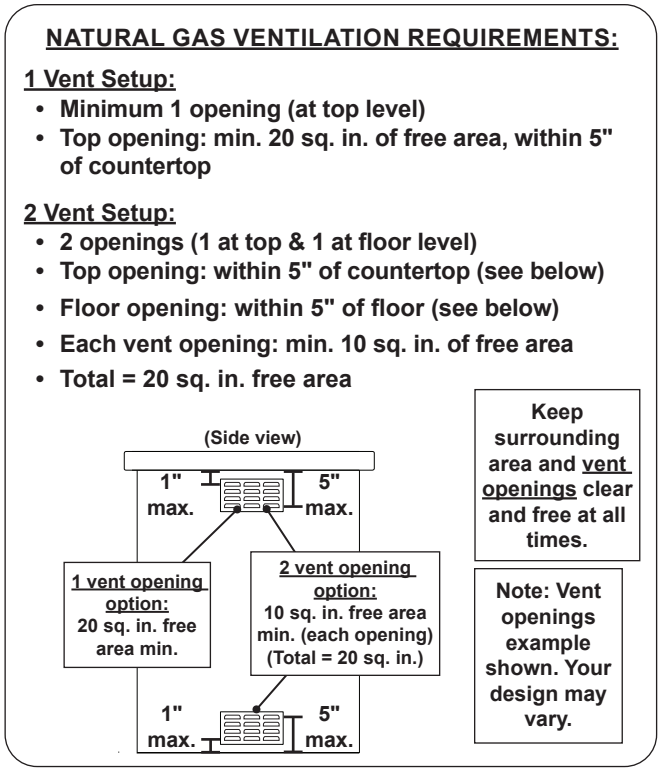

Fig. 12-3 Natural gas ventilation detail

L.P. Cylinder Ventilation Requirements

When an L.P. cylinder is used in the enclosure, the guidelines below MUST be followed:

One side of the enclosure shall be left completely open to the outside; OR 4 minimum vent openings (2 at top and 2 at floor level) MUST be created (reference Fig. 13-1):

- **Each opening at the top level must have a minimum of 10 sq. in. of free area. The openings must be equally sized.**
- **Each opening at the floor level must have a minimum of 5 sq. in. of free area. The openings must be equally sized.**
- **Ventilation total of 30 sq. in. free area**
- Each opening **at the top level** must be on adjacent walls of the enclosure, and spaced at a minimum of 90 degrees. The openings must begin 1" or less below the countertop level and end no more than 5" below the countertop level.
- Each opening **at the floor level** must be on adjacent walls of the enclosure, and spaced at a minimum of 90 degrees. The openings must begin 1" or less above the floor level and end no more than 5" above the floor level.
- **Additional requirements exist for L.P. cylinders, see the L.P. CYLINDER REQUIREMENTS section.**

Note: These same requirements apply when multiple appliances exist in the enclosure.

L.P. CYLINDER VENTILATION REQUIREMENTS:

- **Minimum 4 openings (2 at top & 2 at floor level)**
- **2 per adjacent wall - spaced at min. 90 degrees**
- **Top openings: min. 10 sq. in. of free area each, within 5" of countertop (20 sq. in. top ventilation)**
- **Floor openings: min. 5 sq. in. of free area each, within 5" of floor (10 sq. in. floor ventilation)**
- **Total = 30 sq. in. free area**

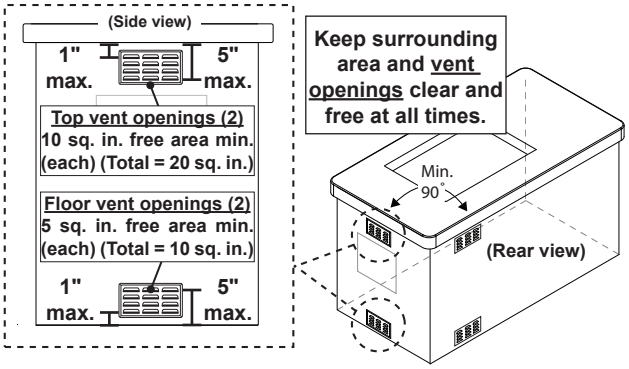

Note: Vent openings example shown. Your design may vary.

Fig. 13-1 L.P. cylinder ventilation detail

Remote L.P. Ventilation Requirements

When a remote L.P. gas system is used with the enclosure, the guidelines below MUST be followed:

One side of the enclosure shall be left completely open to the outside; OR 4 minimum vent openings (2 at top and 2 at floor level) MUST be created (reference Fig. 13-2):

- **Each opening must have a minimum of 45 sq. in. of free area. The openings must be equally sized.**
- **Ventilation total of 180 sq. in. free area**
- Each opening **at the top level** must be on adjacent side walls of the enclosure, and spaced at a minimum of 90 degrees. The openings must begin 1" or less below the countertop level and end no more than 5" below the countertop level.
- Each opening **at the floor level** must be on adjacent walls of the enclosure, and spaced at a minimum of 90 degrees. The openings must begin 1" or less above the floor level and end no more than 5" above the floor level.

Note: These same requirements apply when multiple appliances exist in the enclosure.

REMOTE LP VENTILATION REQUIREMENTS:

- **Minimum 4 openings (2 at top & 2 at floor level)**
- **2 per adjacent wall - spaced at min. 90 degrees**
- **Top openings: within 5" of countertop (see below)**
- **Floor openings: within 5" of floor (see below)**
- **Each vent opening: min. 45 sq. in. of free area**
- **Total = 180 sq. in. free area**

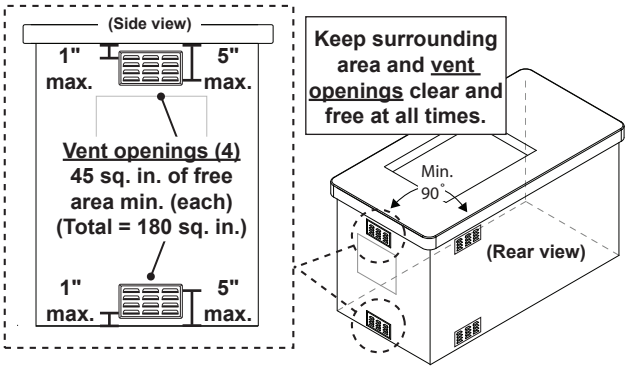

Note: Vent openings example shown. Your design may vary.

Fig. 13-2 Remote LP ventilation detail

Access Door/Panel Requirement

An access door/panel is required on the right side of the grill enclosure to allow access to drip tray and valve connections. See Fig. 14-1.

L.P. Cylinder Requirements (if applicable)

When a propane (L.P.) cylinder is installed inside of the enclosure, the additional guidelines below **MUST** be followed. FAILURE TO DO SO MAY CAUSE DAMAGE TO YOUR UNIT AND/OR PERSONAL INJURY. Refer to Fig. 14-2 and 14-3.

- Only a C.S.A. listed stainless-steel flex connector (not included) must be connected to the unit.
- The regulator/hose assembly coming from the cylinder must only be connected to the above mentioned flex connector. A 1/2" male-to-male flare adapter will be required (not included). **DO NOT connect the regulator/hose assembly directly to the unit.**
- A non-combustible heat shield must be installed to protect the regulator/hose assembly and cylinder valve.
- The cylinder must be properly secured, and rest at least 2" above the ground.
- An additional vent opening is recommended in the access door near the cylinder and at the gas connection level (minimum 10 sq. in. of free area).
- The pressure relief valve on the cylinder must be pointed toward the vent opening for vapour withdrawal.

An "access door with tank tray and louvers" is available. It includes a heat shield that rests directly above the L.P. cylinder, a tray, a retention device, and louvers to meet the cylinder install requirements. The door is shown in Fig. 14-4. Contact your dealer for ordering information.

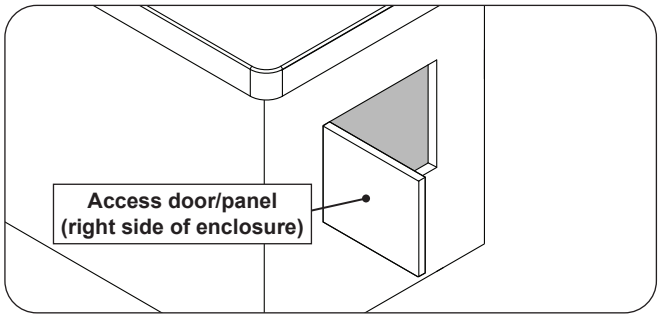

Fig. 14-1 Required access door/panel

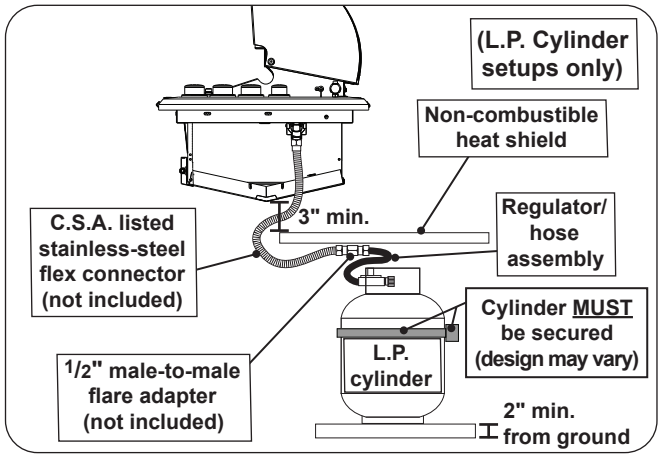

Fig. 14-2 L.P cylinder orientation (if applicable)

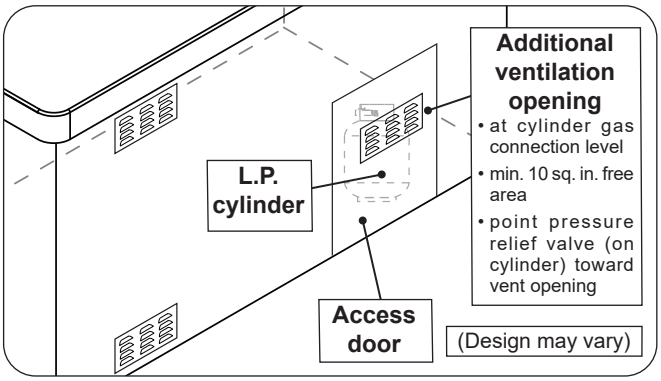

Fig. 14-3 Additional vent opening for L.P. cylinder

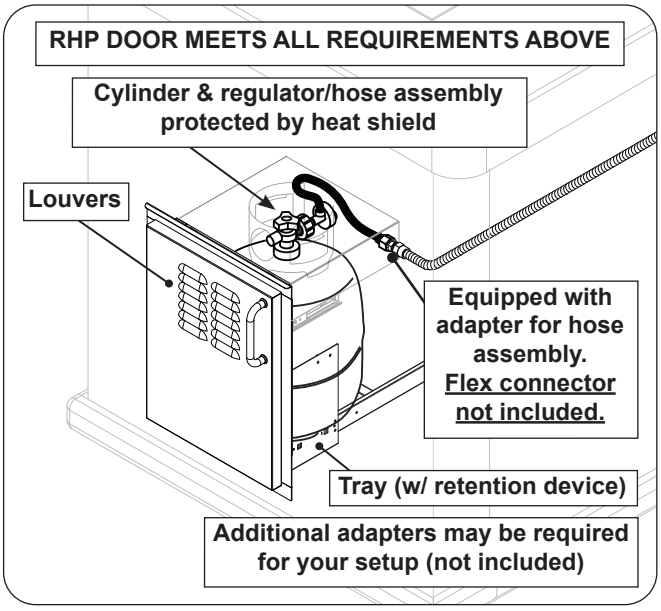

Fig. 14-4 Optional door w/ tank tray & louvers

Cutout Dimensions

Important: These clearance and cutout dimensions below are for non-combustible enclosures. If installing this grill in a combustible enclosure, the correct insulating liner must be used (and the cutout dimensions will differ). See Table 3. Refer to the instructions supplied with the liner for the correct cutout dimensions.

Description (non-combustible cutouts)	Series 34
A Countertop to unit bottom **clearance**	18"
B Side to side **cutout**	41 1/2"
C Front to back **cutout**	20 1/2"

Table 1 - Clearance & Cutout Dimensions (for non-combustible enclosures)

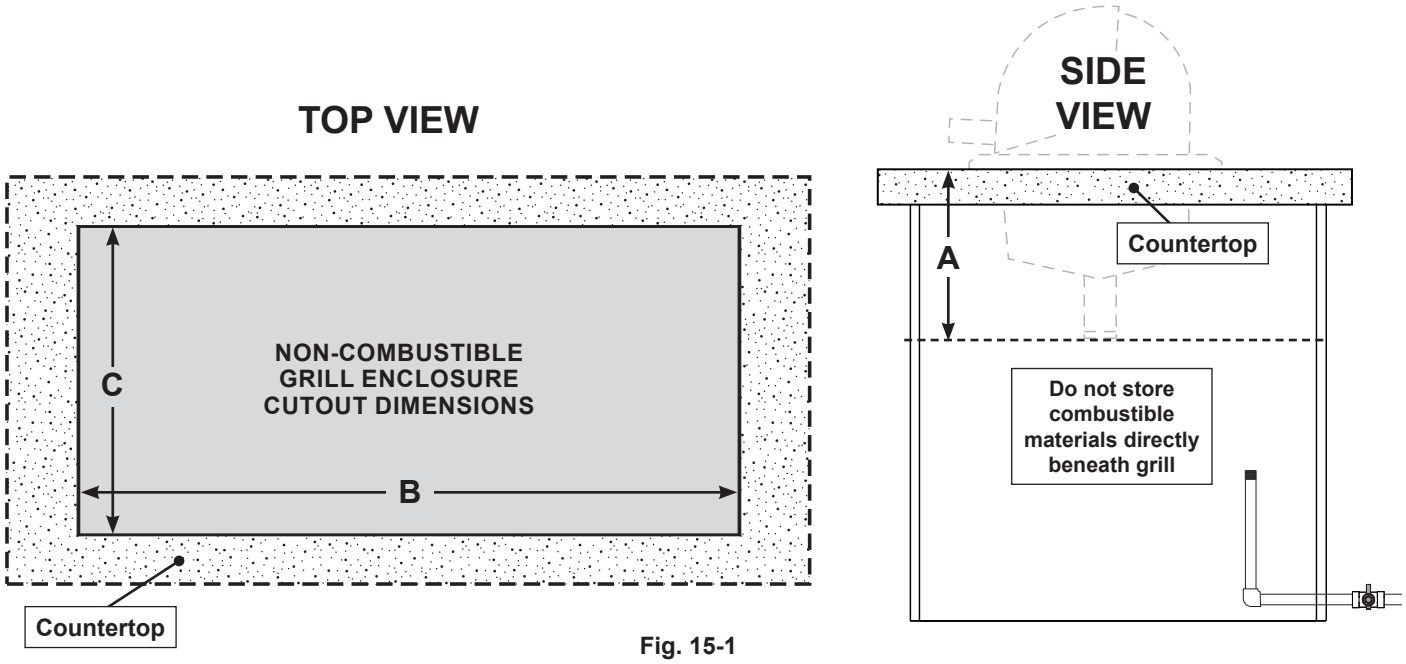

Fig. 15-1

NOTES PAGE

Please use this page to record any information about your unit that you may want to have at hand.

Installation must be performed by a qualified professional service technician.

This unit is designed for outdoor use only. **DO NOT** use this unit inside a building, garage, or enclosed area. **DO NOT** install this unit in or on a recreational vehicle or boat.

Any constructed outdoor area in which the appliance is used shall comply with one of the following:

- An outdoor area with walls on three sides, and no overhead cover
- Within a partial outdoor area that includes an overhead cover and no more than two walls. The sidewalls may be parallel, as in a breezeway, or at right angles to each other
- Within a partial outdoor area that includes an overhead cover with walls on three sides, and at least 30% or more of the horizontal periphery of the enclosure that is open and unrestricted

Note: All openings must be permanently open.

Note: Sliding doors, garage doors, windows, or screened openings are not considered as permanent openings.

Refer to DIAGRAMMATICAL REPRESENTATIONS OF OUTDOOR AREAS section.

OVERHEAD CONSTRUCTION AND EXHAUST HOOD REQUIREMENTS

When installed under combustible overhead construction, the area above the cooking surface of the unit **must** be covered with an exhaust hood. The exhaust hood provides the protection for the combustible overhead construction. See exhaust hood information below and Fig. 17-1.

Important: DO NOT use this appliance under unprotected combustible overhead construction.

When installed under overhead non-combustible construction, an exhaust hood is highly recommended; see exhaust hood information below and Fig. 17-1.

Exhaust Hood

When using an exhaust hood, the area above the cooking surface of the grill must be covered with a hood larger than the cooking area of the grill, and with a minimum of 1200 CFM (cubic feet per minute) rated exhaust fan for proper outdoor application.

Fire Magic vent hoods, spacers, and duct covers are available. They meet all requirements. See Table 3. Contact your local dealer.

- For custom spacers, they **must be constructed entirely of non-combustible material only.**
- For custom soffits, they may be constructed of wood, metal framing, etc.

Clearances

A minimum 5 foot clearance is required between the countertop and the overhead construction. (No combustible materials are allowed within this area.)

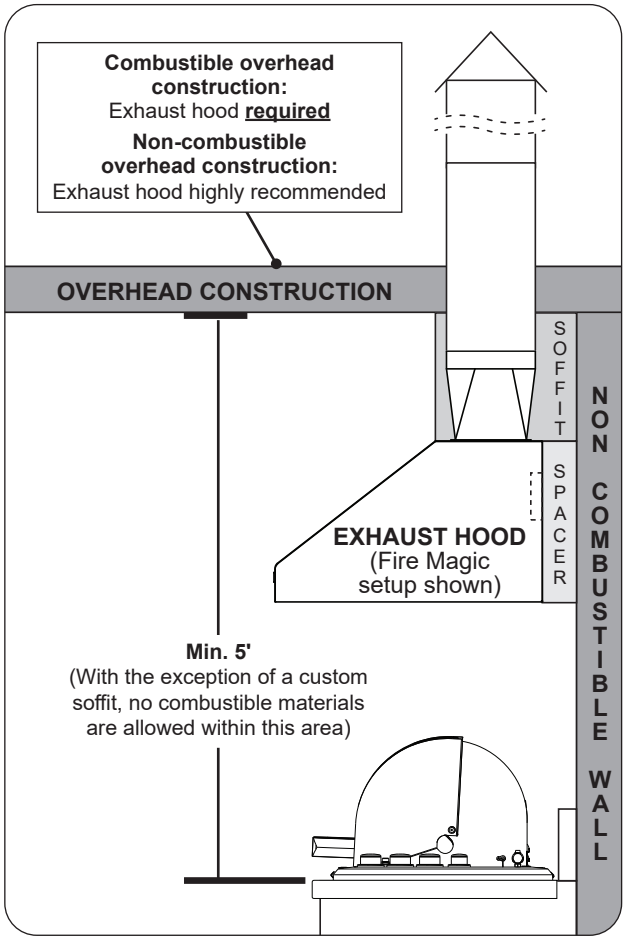

Fig. 17-1 Overhead requirements

REAR WALL CLEARANCES

For the minimum clearances between the unit and rear walls, your setup must fall within one (or more) of the following:

A. Clearance between unit and strictly non-combustible rear wall

(i.e. brick wall, see Fig. 18-1)

- The unit must have a minimum clearance of 4" from the non-combustible rear wall.

  (To allow for proper ventilation and prevent dangerous overheating.)

B. Clearance between unit and a protected combustible rear wall

(i.e. a non-combustible wall in front of a combustible wall to serve as a barrier. This can be accomplished by brick, or a metal stud finished with non-combustible substrate, see Fig. 18-2)

- The unit must have a minimum clearance of 14" from the protected combustible rear wall.

  (The 4" non-combustible material plus an additional 10" clearance between the unit and protected rear wall.)

C. Clearance between unit and combustible rear wall

- The unit must have a minimum clearance of 18" from the combustible rear wall (see Fig. 18-3).

BACKSPLASH CLEARANCE (if applicable)

If a non-combustible backsplash exists, it must have a minimum of a 4" clearance from the rear of the unit (to allow for proper ventilation and prevent dangerous overheating). See Fig. 18-4.

Important: This 4" backsplash clearance must first be met prior to any non-combustible walls beginning behind it.

SIDE / CORNER WALL CLEARANCES (if applicable)

The unit must have a minimum clearance of 24" from any side walls (to account for variables in airflow that could affect performance). See Fig. 18-5.

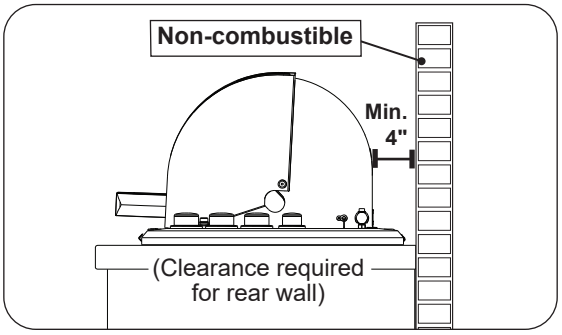

Fig. 18-1 Clearance **'A'** Diagram

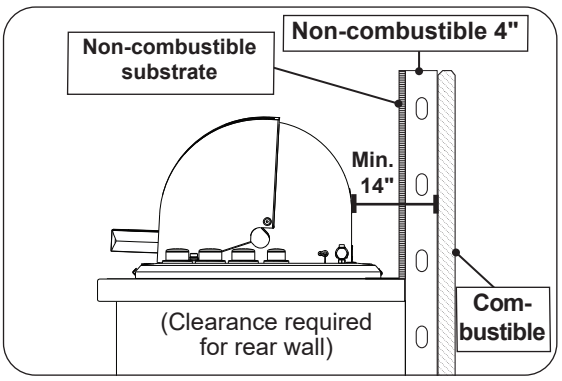

Fig. 18-2 Clearance **'B'** Diagram

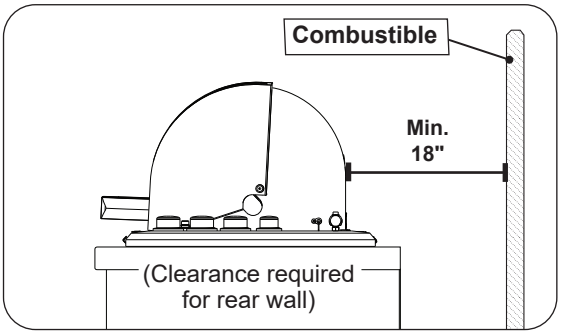

Fig. 18-3 Clearance **'C'** Diagram

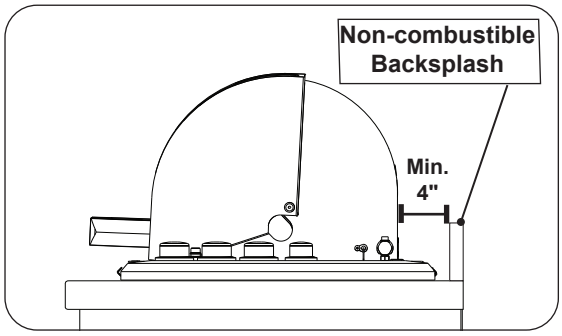

Fig. 18-4 Backsplash clearance

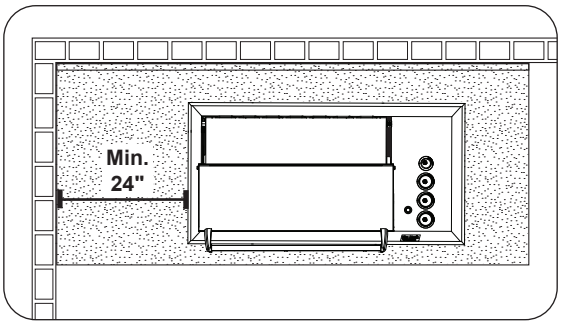

Fig. 18-5 Side/corner wall clearance

The top panel **MUST** remain removable for servicing (see TOP PANEL REMOVAL section).

COMBUSTION AIR AND COOLING AIRFLOW

Proper airflow (front-to-back, Fig. 19-1) MUST be maintained for the unit to perform as it was designed. If airflow is blocked, overheating and poor combustion will result. Do not block the air inlets around the bottom perimeter of the oven lid (see Fig. 19-3).

CAUTION: Wind blowing into or across the rear oven lid vent (Fig. 19-2) can cause poor performance and/or dangerous overheating. Install the grill so that the prevailing wind blows toward the front of the grill (Fig. 19-1).

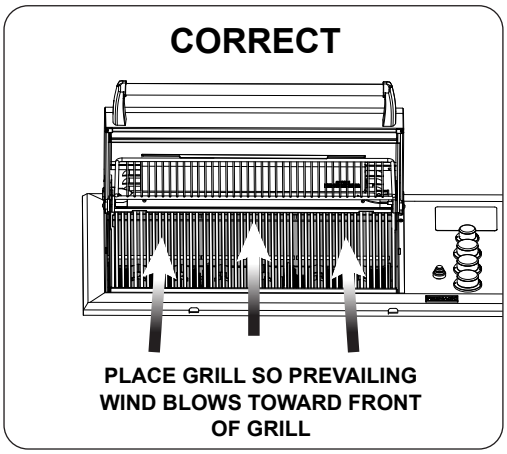

Fig. 19-1 Airflow direction - CORRECT

GAS-SUPPLY PLUMBING REQUIREMENTS

The gas supply is to be routed into the enclosure, near the unit. Your individual installation may vary. **Observe the National Fuel Gas Code and all local codes. Leak test at all connections.**

The gas supply must be sized to provide minimum inlet pressure at the maximum flow rate (BTU/hr). Undue pressure loss will occur if the pipe is too small, or the run is too long. Gas supply pipe must be ½" minimum interior diameter. If the gas line is longer than 20', a larger diameter line may be necessary. Refer to the NFPA 54 guidelines for further details.

DO NOT use a rubber hose within the enclosure.

A C.S.A. approved stainless steel flex connector (not included) must be connected to the regulator that is pre-installed to the valve manifold, and the other end is to route to the gas supply. A flare-to-NPT adapter will be needed for 1/2" pipe. The use of any rigid pipe, semi-rigid tubing, and connectors must comply with the Standard for *Connectors for Outdoor Gas Appliances and Manufactured Homes*, ANSI Z21. 75 (CSA 6.27).

Use a pipe joint compound resistant to all gasses on all NPT pipe fittings. Make sure to tighten every fitting securely. **Do not use pipe joint compound to connect flare fittings.**

Important: A shut-off valve (not included) in the gas supply line is required. It must be installed within 6 feet of the unit and must be easily accessible. Use a pipe joint compound resistant to all gasses on all NPT pipe fittings **except flare fittings**. Refer to NFPA 54 guidelines for further details.

Note: A sediment trap in the gas supply line is recommended where applicable. It should be installed downstream of the shut-off valve as close to the unit as possible. Refer to NFPA 54 guidelines for further details. Refer to NFPA 54 guidelines for further details. Refer to NFPA 54 guidelines for further details.

GAS SUPPLY AND MANIFOLD PRESSURES:

For **natural gas** - normal 7" water column (w.c.), minimum 5", maximum 10 1/2". For **propane gas** - normal 11" w.c., minimum 10", maximum 13".

Note: An additional regulator may be needed to meet these requirements.

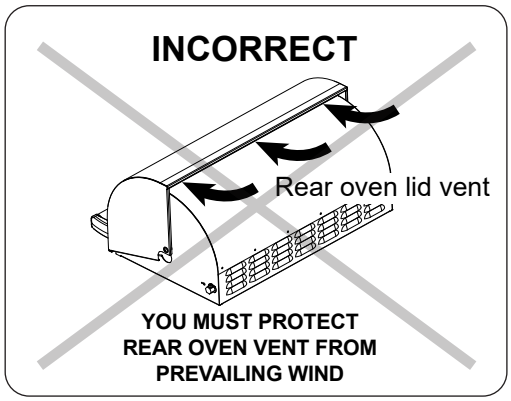

Fig. 19-2 Airflow direction - INCORRECT

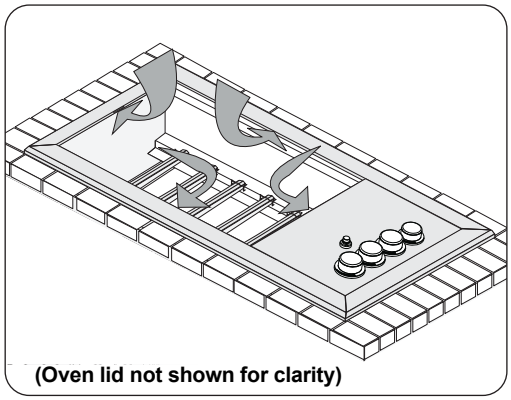

Fig. 19-3 Airflow diagram

DIAGRAMMATICAL REPRESENTATIONS OF OUTDOOR AREAS

The following figures are diagrammatical representations of outdoor areas, as defined in Clause 4.25.3. See INSTALLATION REQUIREMENTS section.

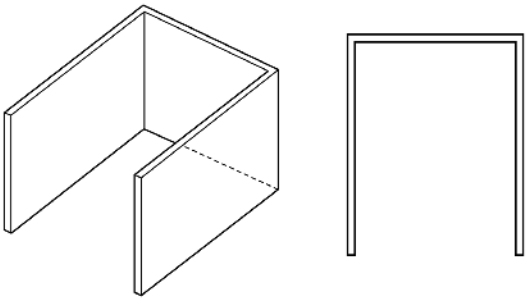

Fig. 20-1 Outdoor area - Example 1

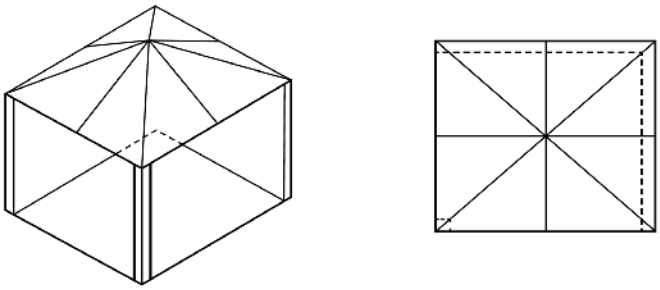

Fig. 20-2 Outdoor area - Example 2

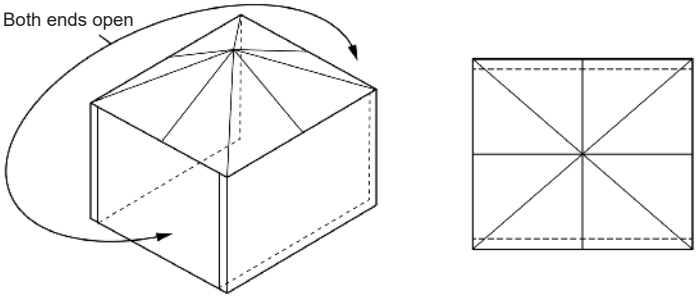

Fig. 20-3 Outdoor area - Example 3

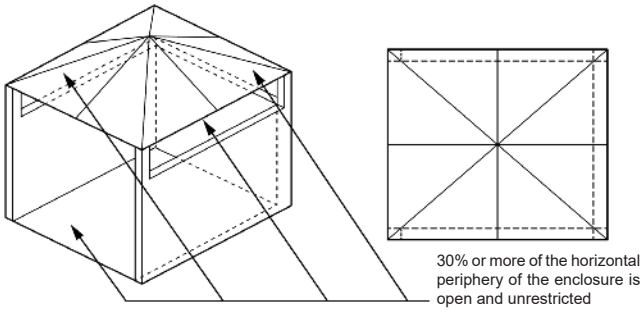

Fig. 20-4 Outdoor area - Example 4

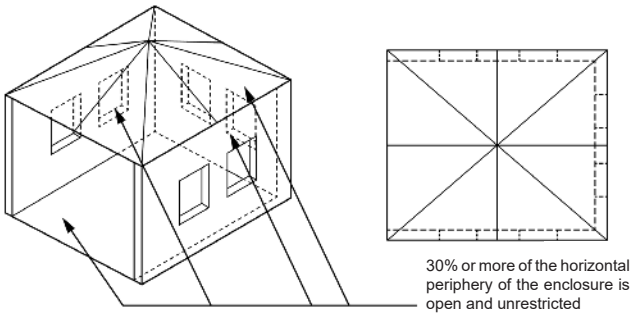

Fig. 20-5 Outdoor area - Example 5

		Series 34	
		Nat.	L.P.
Main burner	Quantity (per pair)	3	3
	Orifice drill size	#52	#61
Backburner *	Quantity	1	1
	Orifice drill size	#42	#54
	Air shutter opening †	9/16"	5/16"
Battery requirement	Quantity	1	
	Type	1.5 V (AAA battery)	

* If equipped

† These are air shutter factory settings. These settings may require adjustment due to gas conversion, altitude, or other local conditions. See AIR SHUTTER ADJUSTMENT / BURNER FLAME INSPECTION section.

Table 2 - Product Specifications

	Series 34
Regal I insulating liner model # *†	3270-50
Vent hood model # *‡	36-VH-7 ‡
Vent hood spacer model # *‡	36-VH-7-02 ‡
Vent hood duct cover model # *‡	36-VH-7-DC ‡
Burner maintenance kit model # *	MK-1
Grill complete maintenance kit model # *	MCK-1

* If applicable, not included

† If installing this grill in a combustible enclosure, the correct insulating liner must be used. Consult liner instructions for counter cutout dimensions and installation.

‡ This model meets the minimum requirements; larger models are also acceptable.

Table 3 - Grill Supporting Products

Model	Height		Width	Depth
	(Top to bottom)		(Left to right)	(Front to back)
	bottom of hanger to top		Maximum width **(C)**	Maximum depth **(D)**
	With oven lid OPEN **(A)**	With oven lid CLOSED **(B)**		
Series 34	20 3/8"	15 1/4"	45"	26 1/2"

Table 4 - Grill Dimensions

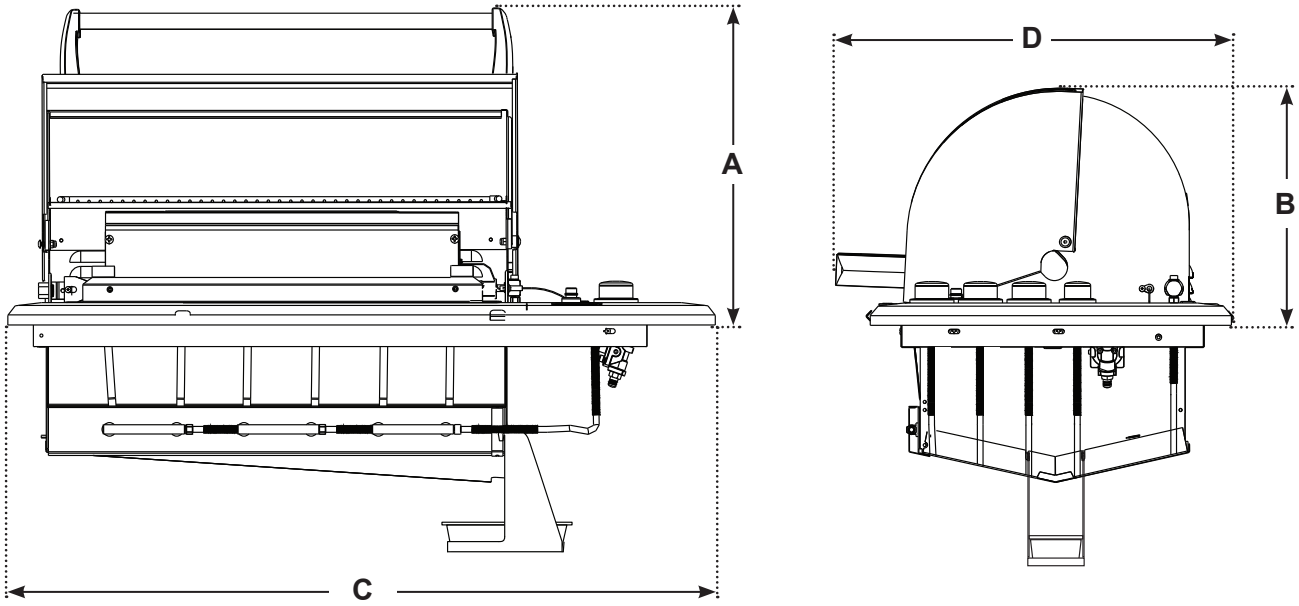

Fig. 22-1

REGAL I GRILL REPLACEMENT PARTS LIST

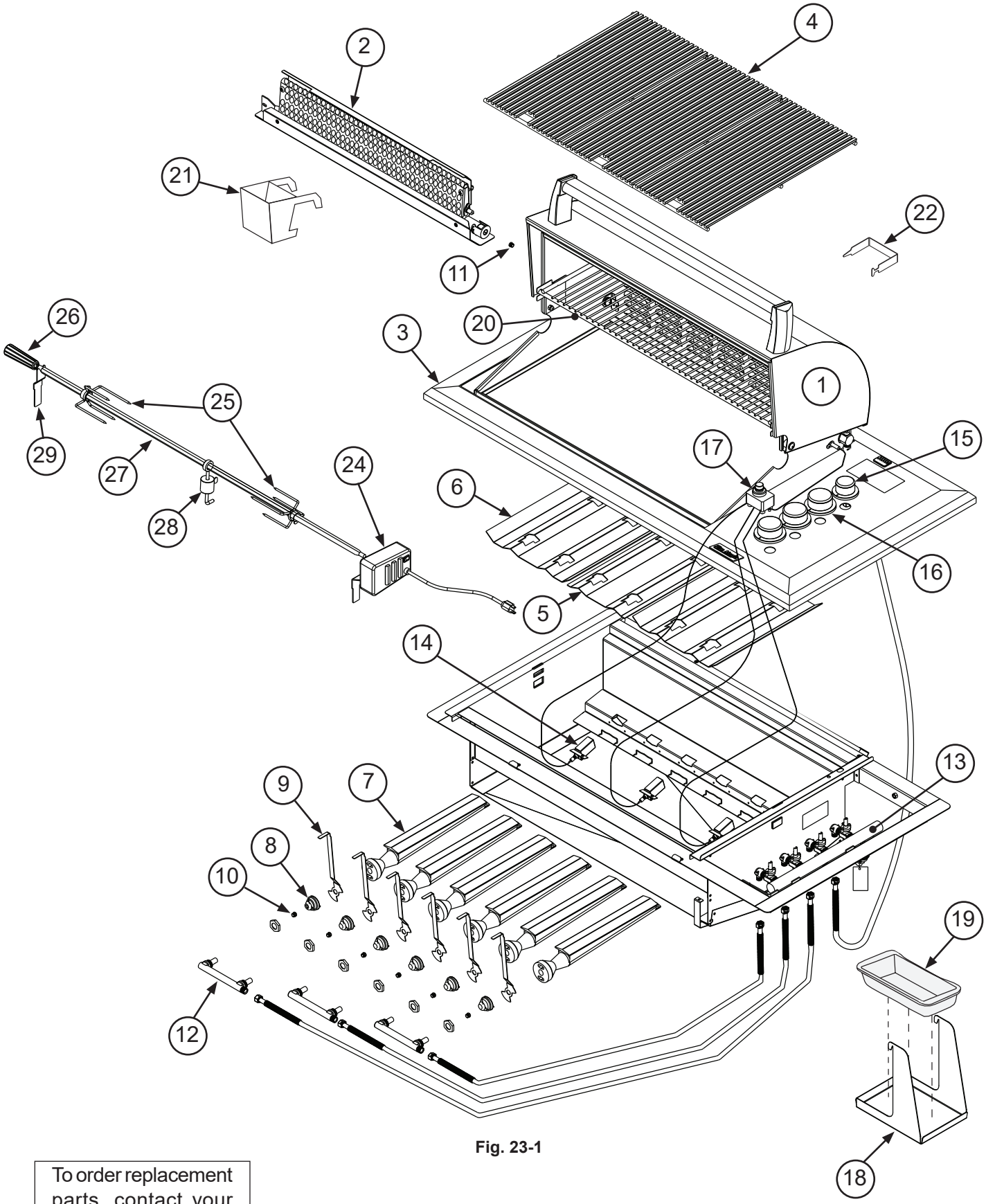

Fig. 23-1

To order replacement parts, contact your local Fire Magic® dealer.

REGAL I GRILL REPLACEMENT PARTS LIST (Cont.)

		Series 34	
Item	**Description**	**Part No.**	**Qty.**
1.	Stainless steel oven lid	23733-51	1
2.	Backburner assembly *	4732-02	1
3.	Top panel w/ backburner *	3279-09	1
or	Top panel w/o backburner * †	4271-09	1
4.	Cooking grids, stainless steel (set of 3)	3543-DS-3	1
or	Cooking grids, porcelainized cast iron (set of 3)	3524-3	1
5.	Flavor grid, 7"	3054-S	1
6.	Flavor grid, 10"	3052-S	2
7.	Main burner (set of 2)	3042-40-2	3
8.	Air shutter spring (set of 2)	3048-03-02	3
9.	Air shutter	3270-03	6
10.	Main burner orifice, Nat gas (set of 6)	3001-52-6	1
or	Main burner orifice, L.P. gas (set of 6)	3001-61-6	1
11.	Backburner orifice, Nat gas*	3001-42-1	1
or	Backburner orifice, L.P. gas*	3001-54-1	1
12.	Burner manifold	3270-19	3
13.	Valve manifold w/ valve and regulator (w/ backburner) *	4270-13	1
or	Valve manifold w/ valve and regulator (w/o backburner) * †	3270-13	1
14.	Electrode collector assembly (main burner)	3199-61	3
15.	Backburner control knob *	3019	1
16.	Main burner control knob	3017	3
17.	Igniter assembly	3199-48	1
18.	Drip tray	3270-10	1
19.	Drip tray liner	3270-11	1
20.	Warming rack	3673S	1
21.	Wood chip box	4732-09	1
22.	Grid lifter	3519	1
23.	Electrode collector (backburner) * †	4199-69	1
24.	Heavy duty rotisserie motor w/ mounting bracket attached *	3600-02	1
25.	Meat holder (pair) *	3613	1
26.	Handle *	3600-13	1
27.	Heavy duty rotisserie rod 5/8" hex *	3606-30	1
28.	Counterbalance *	3620E	1
29.	Spit bracket *	3600-18	2

* If equipped
† Not shown

CONSTRUCT ENCLOSURE

A custom-built enclosure will need to be constructed. Construct the enclosure according to your individual install preference, while following the guidelines found in the ENCLOSURE REQUIREMENTS and INSTALLATION REQUIREMENTS sections.

- Construct the enclosure in an appropriate location (ensure all requirements of this manual and all local codes are met when determining location).
- **Follow all information regarding enclosure parameters, ventilation, drainage, cylinder requirements, cutout dimensions, and clearances listed in the ENCLOSURE REQUIREMENTS and INSTALLATION REQUIREMENTS sections.** Failure to do so will prevent proper operation and can cause property damage or personal injury.

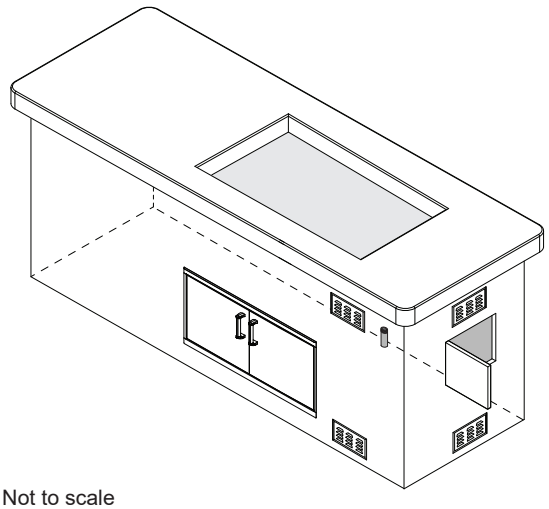

- Not to scale
- Example shown, design and location of enclosure and its items may vary
- See ENCLOSURE REQUIREMENTS section for details

Fig. 25-1 Enclosure construction overview (if applicable)

INSTALL INSULATING LINER (if applicable)

If installing your unit in a combustible enclosure, the correct insulating liner must be used. Refer to the instructions supplied with the liner for installation.

LOWER UNIT INTO ENCLOSURE CUTOUT

CAUTION: THE GRILL IS HEAVY AND REQUIRES TWO OR MORE PEOPLE FOR SAFE HANDLING.

Carefully place the unit into the cutout in the enclosure, making sure not to damage any part of the unit (see Fig. 25-2).

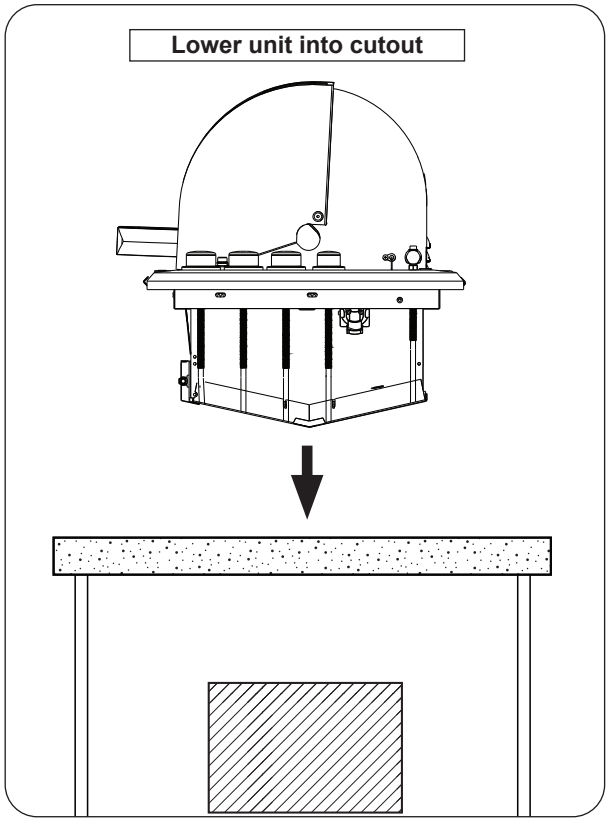

Fig. 25-2 Lower in unit into cutout

CONNECT GAS SUPPLY

To Connect To Propane Cylinder:
Read the safety warnings and follow the instructions in the section SAFE USE AND MAINTENANCE OF PROPANE GAS CYLINDERS.

Note: When a propane cylinder is installed inside of the enclosure, the guidelines found in the GRILL ENCLOSURE / VENTILATION REQUIREMENTS section MUST be followed.

To Connect To Natural Or Household Propane Gas Supply:

CAUTION: Use only C.S.A. listed stainless-steel flex connectors within the enclosure.

WARNING

A rubber or plastic connector will rupture or leak, resulting in an explosion or serious injury if used inside the appliance enclosure.

- Before connecting the gas supply to your appliance, pressures MUST be tested and MUST NOT exceed 10.5" w.c. for Nat. gas and 13" w.c. for L.P. gas. An additional regulator may be required.
- Refer to the GAS SUPPLY PLUMBING REQUIREMENTS section for all details on the gas supply and its setup.

1. **Turn OFF the gas supply at the source.**
2. Locate the regulator found on the right side of the unit. Connect a flex connector (not included) to the 1/2" flare adapter found on the regulator. Support the regulator adapter with a wrench to avoid applying excessive torque to the assembly while tightening. Do not use pipe compound on the flare fitting. See Fig. 26-1, A.

Note: Access these connections via the required access door.

3. Route the other end of the flex connector to the gas supply (see Fig. 26-1, B).
4. A shut-off valve is required within 6 feet of the unit and must be easily accessible.

If shut-off valve is installed in-line:

- Install the supplied flare-to-NPT adapter to the gas supply (NPT) using a pipe joint compound resistant to all gasses (see Fig. 26-2, A). Tighten securely.
- Connect the flex connector to the adapter (see Fig. 26-2, A). Tighten securely.

If shut-off valve is connected to end of gas supply stub:

- Connect the flex connector to the shut-off valve (flare) (see Fig. 26-2, B). Tighten securely.

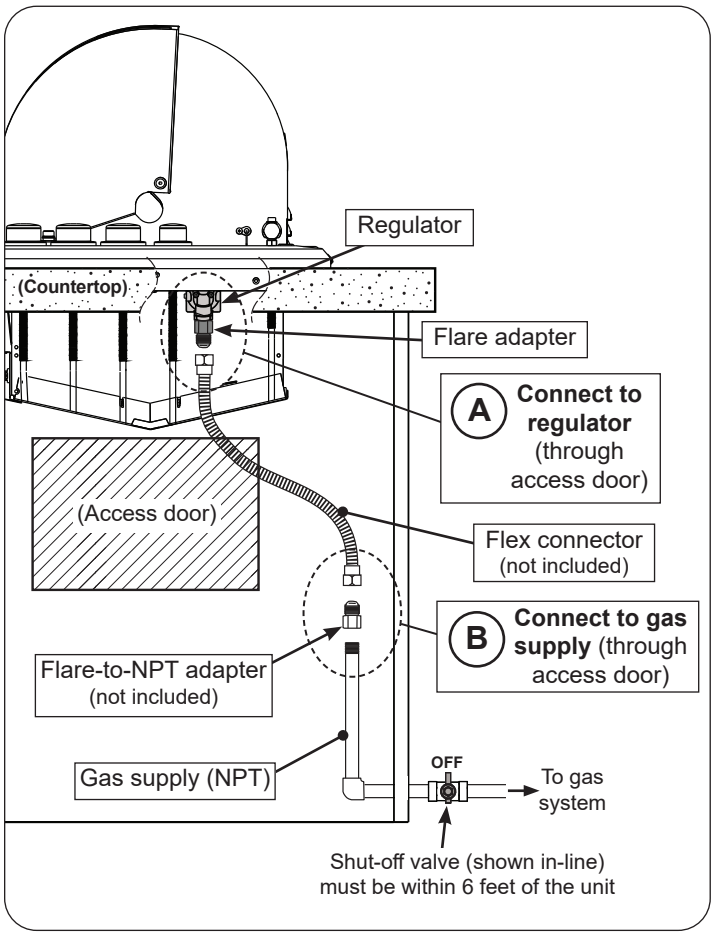

Fig. 26-1 Household L.P. & Nat. gas diagram

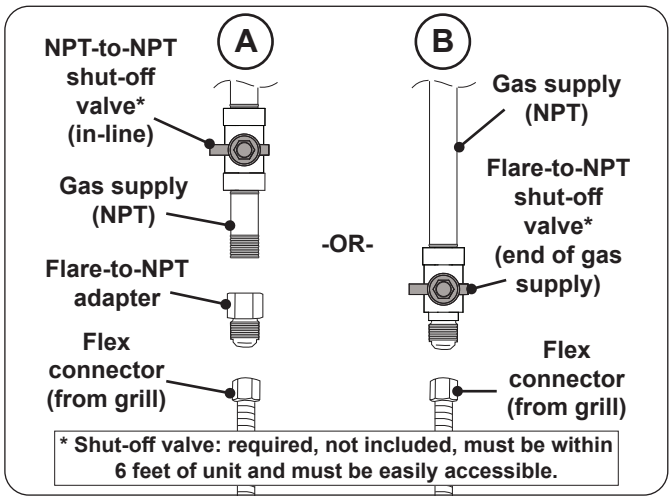

Fig. 26-2 Connecting to a gas line

LEAK TEST

Turn all burner valves to the **OFF** position. Turn on the gas supply, and test at all connections for leaks using a soapy water solution. If bubbles appear, a leak is present. Turn off the gas and tighten at all connections. Repeat until no leaks are present. If a leak persists, turn off the gas supply and contact the local gas company or dealer. **NEVER USE A FLAME TO CHECK FOR LEAKS.**

Once the leak test is complete, turn off the gas supply and proceed.

INSTALL DRIP TRAY

1. Through the enclosure side access door, install the drip tray by inserting the hooks into the two slots found on the lower right side of the grill (see Fig. 27-1).
2. Place a drip tray liner in the drip tray.

Note: Disposable liners (mini-loaf pans) are available at many stores. Alternatively, an empty 14 to 18 ounce tin can be substituted for the drip tray liner.

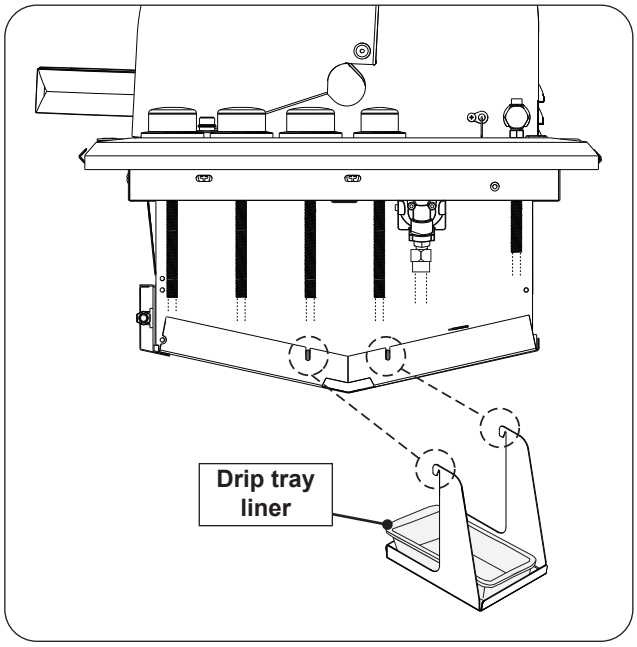

Fig. 27-1 Install drip tray

SECURE GRILL TO COUNTERTOP

1. Remove the top panel. See the TOP PANEL REMOVAL section for details.
2. Screw the 1 1/4" stabilizer screw (packed in the instructions bag) through the nut mounted on the right rear corner of the frame assembly (see Fig. 27-2). This will secure your grill in place.
3. Reinstall the top panel.

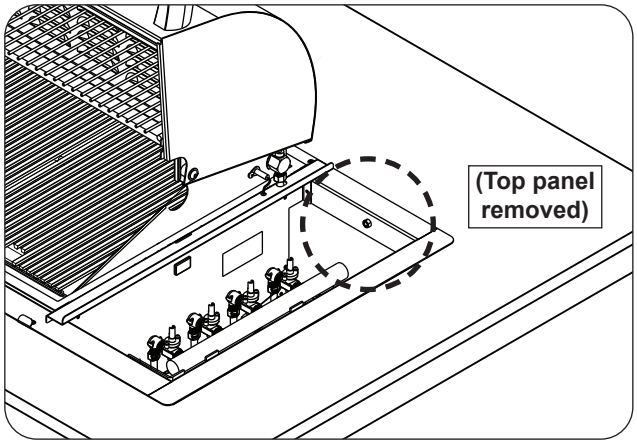

Fig. 27-2 Secure grill frame

INSTALL FLAVOR GRIDS

Place the flavor grids directly onto the burners. **The slightly larger grids are designed to be placed over the outer burners, and the slightly smaller grid over the inner burners.** Reference Fig. 27-3 and the parts list. The flavor grids allow heat from the burners to be evenly distributed throughout the cooking area.

Note: Each flavor grid has legs and places over a burner pair.

Fig. 27-3 Install flavor grids over burners

INSTALL COOKING GRIDS

Note: Wear heat-resistant gloves if necessary.

Note: Do not leave the lifter on any hot surfaces.

1. With the prongs facing downward, insert the notched-end of the lifter between two grid rods, then rotate, as shown in Fig. 28-1, A & B.

Note: To balance, insert the notched-end of the lifter in the middle front half of the cooking grid.

2. Insert the rear pointed-end of the lifter between the same two rods (Fig. 28-1, B) and carefully lift the cooking grid and place onto the front and rear grid rests of the grill (see Fig. 28-2). Repeat for all other cooking grids.

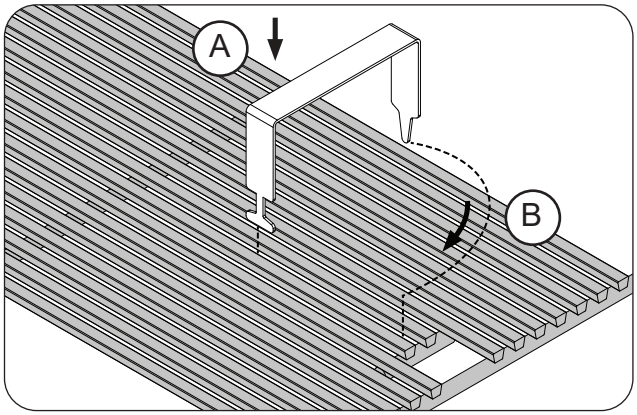

Fig. 28-1 Install cooking grids

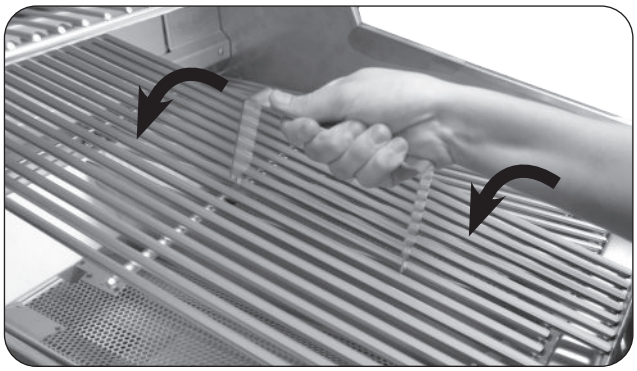

Fig. 28-2 Install cooking grids

INSTALL WARMING RACK

The warming rack is packed separately. To install the warming rack, carefully slide it into place as shown in Fig. 28-3. The rack will rest on the tabs, and insert into the left and right brackets.

Note: Removing the warming rack before using the rotisserie will leave more clearance for the meat being cooked (if applicable).

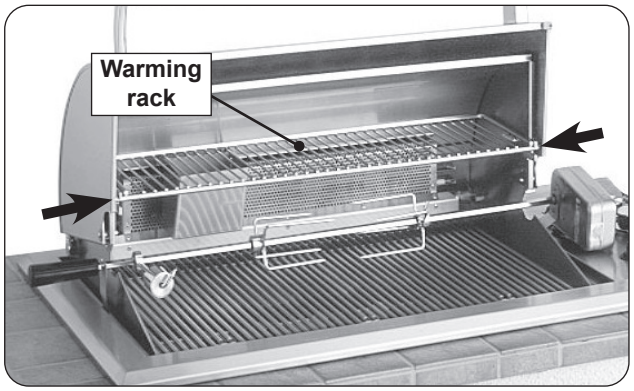

Fig. 28-3 Install warming rack

INSTALL BACKBURNER COVER

The backburner cover is installed by placing the curved part of the cover over the top of the perforated portion of the backburner (see Fig. 28-4). The cover should be kept in place on the backburner when it is not in use. This will keep your backburner free from grease splatter and debris that may hinder its performance.

Important: You must remove the backburner cover before lighting the backburner.

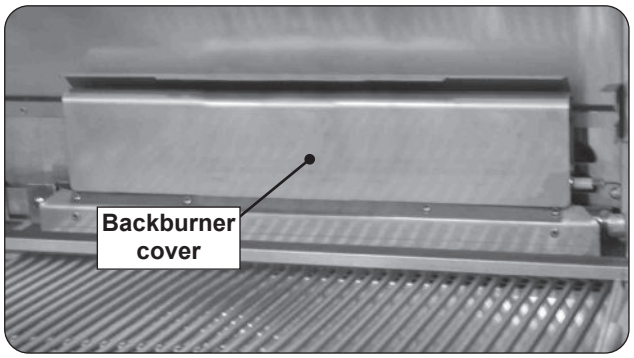

Fig. 28-4 Install backburner cover

OPERATION TEST

After installation, perform an operation test of the grill and its features/accessories. Refer to the following sections for details.

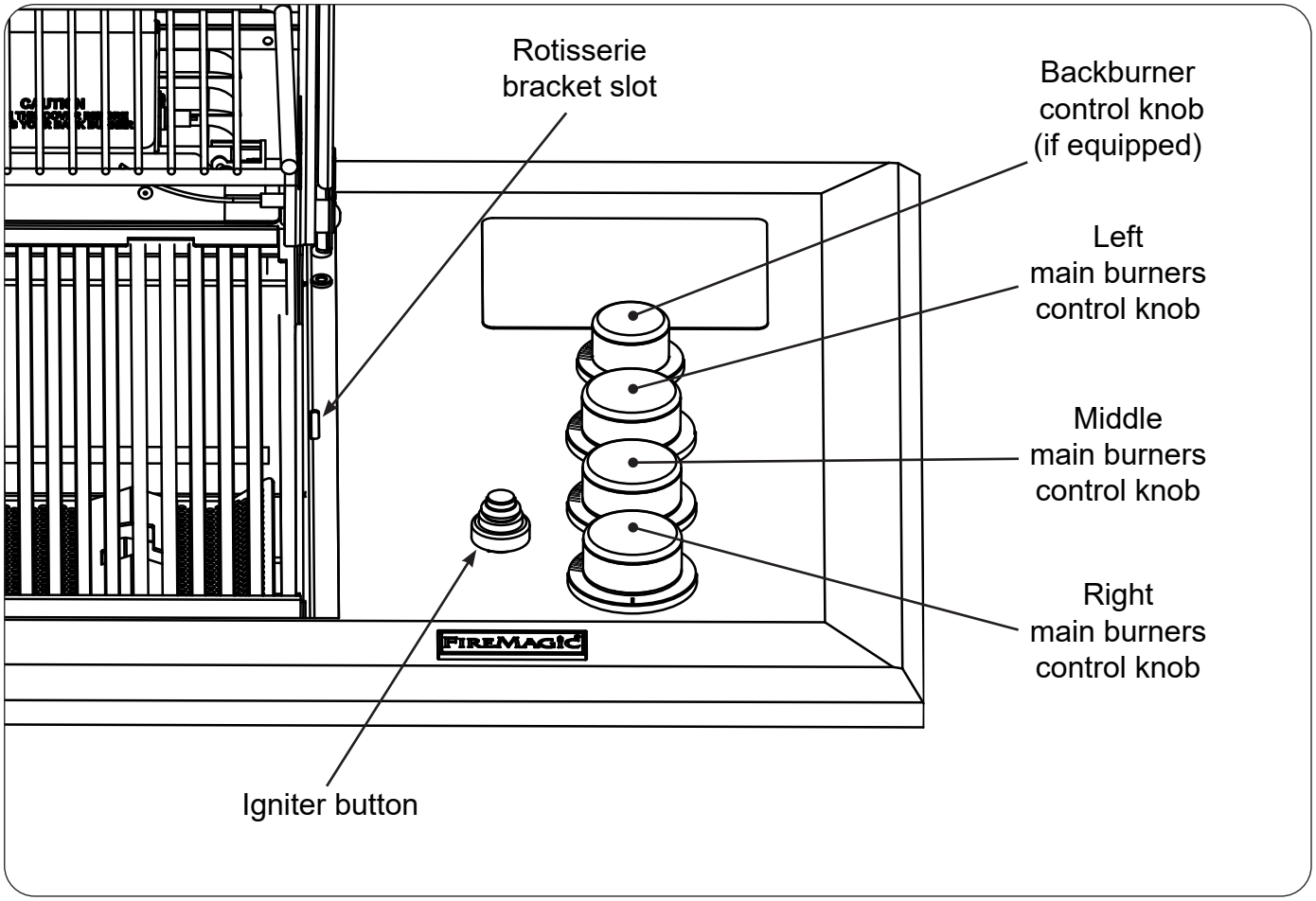

Fig. 29-1 Regal I drop-in controls

BEFORE INITIAL USE

Ensure that:

- the unit has been properly installed and leak tested by a qualified professional service technician and as instructed in this manual.
- you have read and understand all of the information in this manual.

BEFORE EACH USE

Ensure that:

- you smell around the appliance area for gas. If you smell gas (and all control knobs are in the **OFF** position), immediately shut off the gas supply and contact a qualified professional service technician or the gas supplier for inspection.
- the required vent openings and surrounding area of the enclosure are clear at all times.
- the cooking area and drip tray are clean, and the drip tray is properly installed.
- you inspect all piping and hoses for damage, cuts, wear, and tear. Replace any damaged components prior to use.

OPERATION

- **The unit becomes HOT during use. NEVER touch any part of the cooking area or surrounding hot surfaces with bare hands. Use long-handled insulated BBQ tools and wear an insulated glove / oven mitt.**
- **Always keep your face and body as far from the unit as possible during use. Avoid wearing loose-fitting clothing as they could ignite.**
- **This appliance is designed as an attended appliance. DO NOT leave this appliance burning when unattended.**
- **NEVER cover more than 75% of the cooking surface with griddles, pots or pans to prevent overheating.**
- **After each use, turn the control knob(s) to the OFF position and turn off the gas supply to the unit.**

After reading and understanding all bullets above, follow these steps to light and use your grill:

1. Light the grill per the LIGHTING INSTRUCTIONS section.
2. Turn the control knobs to the HI-LIGHT position, close the hood, and allow the grill to preheat for 15 minutes or until desired cooking temperature is reached.
3. Place the food on the grill and cook as desired. Monitor the flames and the temperature, and adjust the heat setting if necessary.
4. See the sections below and the following pages for all other information regarding use.

WIND CONSIDERATIONS

Proper airflow (front-to-back, Fig. 30-1) MUST be maintained for the unit to perform as it was designed. See the INSTALLATION REQUIREMENTS section for details.

When using the unit in windy conditions, the wind can disrupt the airflow and cause overheating. To prevent overheating during windy conditions, do not leave the hood closed with the burners on high for more than 15 minutes.

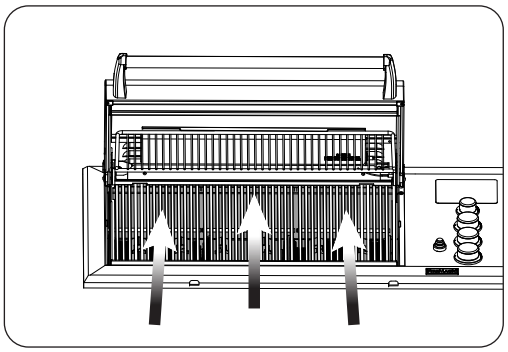

Fig. 30-1 Airflow diagram

AFTER EACH USE

1. Operate on high with hood closed for 10-15 minutes to burn off all grease.
2. Turn off the grill and brush the cooking grids to remove all residue.

CAUTION: Use long-handled insulated BBQ tools and wear an insulated glove / oven mitt.

3. When the grill is cool, check and clean the drip tray. Then cover the grill.

Note: For additional cleaning information, refer to the SERVICING AND CLEANING section.

LIGHTING (IGNITION) INSTRUCTIONS

Read all instructions before lighting, and follow these instructions each time you light the unit.

ELECTRONIC LIGHTING

Note: Electronic lighting requires an installed AAA battery with a good charge.

1. Open lid(s) or remove cover(s) from burner(s) to be lit.
2. Turn all gas control knob(s) to their **OFF** position(s).
3. Turn on the gas at its source.

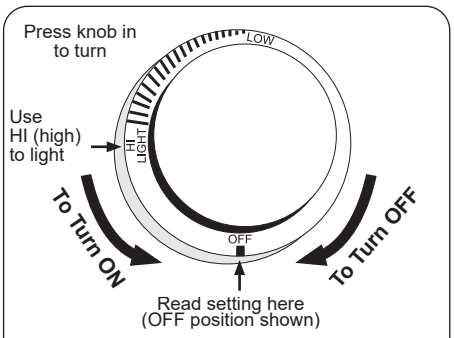

Fig. 31-1 Control knob

Note: DO NOT turn on more than one valve at a time for either electronic or manual lighting.

4. Press and hold the igniter switch. Ensure the igniter is sparking (it will create a "clicking" sound), then, depress the desired control knob, and while pressing turn it counterclockwise to the **HI LIGHT** position. Once the burner lights, release the control knob and igniter switch.

CAUTION: If a burner does not light within five (5) seconds of turning on the control knob, depress the knob and turn it to the **OFF** position. WAIT FIVE (5) MINUTES before repeating step 4. If you smell gas, follow the instructions on the cover of this manual. If the burners still do not light after several attempts, refer to the instructions for manual lighting.

5. Repeat step 4 for each additional burner to be lit.

WHEN USING A PORTABLE PROPANE TANK

Propane tanks are equipped with a safety shutdown device that may cause low or no gas pressure/flame at the burners if operating and lighting instructions are not followed exactly (See important note in the TROUBLESHOOTING section for more details.)

MANUAL LIGHTING

CAUTION: Always wait five (5) minutes for gas to clear after any unsuccessful lighting attempt.

1. Follow steps 1 through 3 (left).
2. Insert either a burning long-barrel butane lighter or a burning long-stem match through the cooking grid opening to the top of the burner (Fig. 31-2). For backburners, hold the flame against the surface of the backburner.
3. Hold the match / lighter flame at the top of the burner, or, next to the backburner. Then depress the appropriate control knob and while pressing turn it counterclockwise to the **HI LIGHT** position. Remove the lighter or match when the burner lights, and release the control knob.
4. If the burner does not light within five (5) seconds of turning the control knob, **immediately depress the knob and turn the valve to OFF**. WAIT FIVE (5) MINUTES before repeating steps 2 through 4 of the MANUAL LIGHTING instructions.

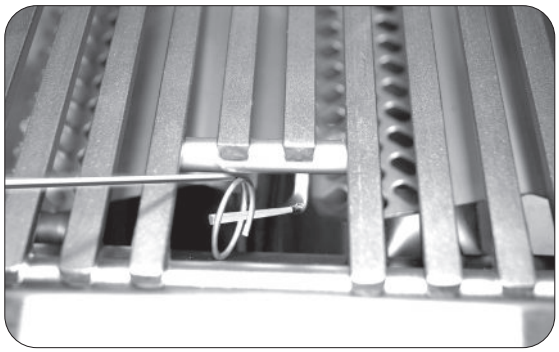

Fig. 31-2 **- Manual lighting**

SHUTTING OFF THE UNIT

To shut off the unit, depress each valve control knob and while pressing turn it clockwise to the **OFF** position.

Always close the valve from the gas supply after each use of the unit.

ALLUMAGE DES INSTRUCTIONS (D'ALLUMAGE)

Lisez toutes les instructions avant l'allumage, et suivez ces instructions chaque fois vous lumière le unité.

ÉCLAIRAGE ÉLECTRONIQUE

Note: Éclairage électronique nécessite une pile AAA installé avec une bonne charge.

1. Ouvrez les couvercles ou enlevez les couvertures des brûleurs pour être Lit.
2. Tournez tous les boutons de commande de gaz à leurs positions de repos.
3. Allumez le gaz à sa source.

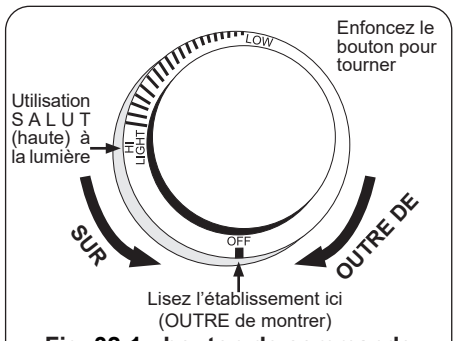

Fig. 32-1 - bouton de commande

Note: N'ouvrez pas plus d'une valve à la fois pour l'éclairage électronique ou manuel.

4. Appuyez sur le commutateur d'allumage et maintenez-le enfoncé. Assurez-vous que l'allumeur produit des étincelles (il produira un «clic»), puis appuyez sur le bouton de commande souhaité et, tout en appuyant sur, tournez-le dans le sens inverse des aiguilles d'une montre jusqu'à la position **HI LIGHT**. Une fois que le brûleur est allumé, relâchez le bouton de commande et le commutateur d'allumage.

ATTENTION : Si un brûleur ne s'allume pas dans les cinq (5) secondes qui suivent l'allumage du bouton de commande, appuyez dessus et tournez-le en position **OFF**. ATTENDEZ CINQ (5) MINUTES avant de répéter l'étape 4. Si vous sentez une odeur de gaz, suivez les instructions figurant sur la couverture de ce manuel. Si les brûleurs ne s'allument toujours pas après plusieurs tentatives, reportez-vous aux instructions pour l'allumage manuel.

5. Répétez l'étape 4 pour chaque brûleur supplémentaire à allumer.

EN EMPLOYANT UN RÉSERVOIR DE PROPANE PORTATIF

Des réservoirs de propane sont équipés d'un dispositif d'arrêt de sûreté qui peut ne pas causer le bas ou aucunes pression de gaz/flamme aux brûleurs si le fonctionnement et l'allumage des instructions ne sont pas suivis exactement (voir la note importante dans la section de dépannage pour plus de détails.)

ÉCLAIRAGE MANUEL

ATTENTION: Attendez toujours cinq (5) minutes le gaz pour se dégager après que n'importe quelle tentative non réussie d'éclairage.

1. Suivez les étapes 1 à 3 (à gauche).
2. Insérez soit un allumeur au butane brûlant à long canon, soit un allumeur à longue tige brûlante dans l'ouverture de la grille de cuisson vers le haut du brûleur (Fig. 32-2). Pour les backburners, maintenez la flamme contre la surface du backburner.
3. Tenez la flamme allumette / briquet en haut du brûleur ou à côté du brûleur arrière. Appuyez ensuite sur le bouton de commande approprié et, tout en appuyant sur, tournez-le dans le sens inverse des aiguilles d'une montre jusqu'à la position **HI LIGHT**. Retirez le briquet ou allumez-le lorsque le brûleur s'allume, puis relâchez le bouton de commande.
4. Si le brûleur ne se allume pas dans les **cinq (5) secondes** de tourner le bouton de commande, enfoncez immédiatement le bouton et tournez la valve à AU LOIN. ATTENDEZ CINQ (5) MINUTES avant de répéter les étapes 2 à 4 des instructions manuelles d'éclairage.

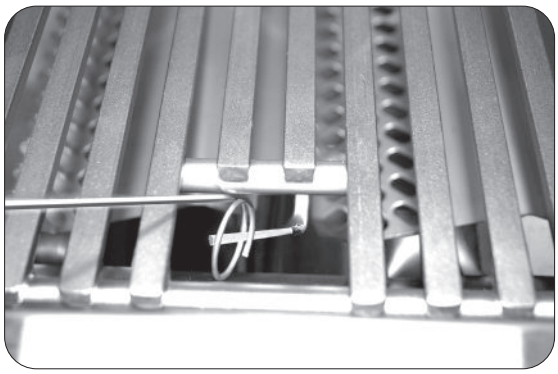

Fig. 32-2 **- Éclairage manuel**

ARRÊT DU UNITÉ

Pour couper le unité, diminuez chaque bouton de commande de valve et tout en pressant tour il dans le sens des aiguilles d'une montre à la position de repos.

Fermez toujours la valve de la fourniture de gaz après chaque utilisation du unité.

USING YOUR BACKBURNER AND ROTISSERIE

Rotisserie cooking with the backburner is accomplished without use of the main burners. Follow the steps in the appropriate sections below to set up and use these accessories (see PARTS LIST for image).

SET UP

1. Remove the backburner cover (if present) by sliding it upward off the backburner.
2. Remove the cooking grids from your grill (if necessary) to obtain maximum clearance for larger cuts. The flavor grids may also be removed if required.

   Tip: Aluminum foil or a baking pan may be placed over the main burners, a little forward of center, to catch excess drippings from the meat.
3. Attach the rotisserie motor to the grill frame by inserting the tab of the bracket attached to the motor into the slot on the right of the grill so that the spit rod will fit into the motor drive socket from the left. If left-side spit support is not already in place, insert it into the tab on the left side of the grill at this time. Follow the LIGHTING INSTRUCTIONS to light the backburner.
4. Allow the backburner to preheat for approximately 10 minutes on **HI LIGHT** setting.

PUTTING THE MEAT ON THE SPIT ROD

1. Slide the meat and spit prongs onto the spit rod so the meat is centered and balanced as well as possible.
2. Tighten the spit prongs into place so that the meat remains in a fixed position on the rod and the meat rotates with the rod.

Important: The counterbalance, which is included with your rotisserie kit, should be used to balance the load on your rotisserie and prolong the life of your motor. Heavy unbalanced meats can stress the rotisserie motor and may cause motor failure.

USING THE COUNTERBALANCE SUPPLIED WITH YOUR ROTISSERIE

1. Hold the spit rod at each end and lift. **Do not grip the rod.** Let the rod rotate so the heavy side of the meat hangs down naturally.
2. Turn the counterbalance on the spit so the counterbalance rod and weight point upward, or opposite from the heavy side of the meat. Tighten the counterbalance rod in the hub against a flat surface of the spit rod to secure (Fig. 33-1).

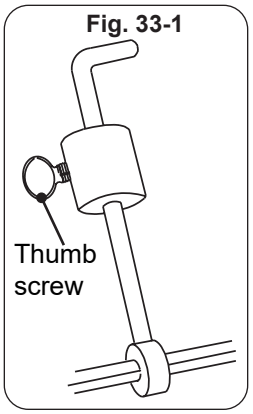

Fig. 33-1

3. Loosen the thumb screw and slide the weight along the counterbalance rod to balance the meat. Since meats are not a uniform shape, it may not be possible to achieve a perfect balance. Properly balanced meat should not rotate when you hold the spit rod loosely by the ends.
4. Make sure the counterbalance will not strike the grill frame when the rotisserie is started.

RUNNING THE ROTISSERIE

1. Place the pointed end of the spit rod into the motor drive socket and rest the handle end of the spit rod in the spit bracket on the right side of the grill.
2. Plug in (if necessary) and turn on the rotisserie motor.
3. Use a standard roasting guide to estimate the length of time for your meat. A meat thermometer may also be used to tell when your favorite cuts are cooked to your liking. When testing temperatures with a thermometer, turn off the rotisserie motor and turn the backburner on **LOW**. This will keep the meat from overcooking on one side.

Note: When burning properly, the backburner flames will be blue with yellow tipping, and the grating will glow red. The first time it is used, the backburner may smoke a little.

Important: Operate your backburner with the oven closed. This simulates an oven effect and helps your meat cook faster. Constant rotation of the spit ensures even cooking and maximum retention of juices.

Note: On large cuts of meat or whole turkeys, it may be necessary to reduce the heat from your backburner. Cooking your food at a lower temperature for a longer period of time will keep the outer surface from burning while cooking the interior of your meat. In any case, it is normal for the back burner grating to glow red when operating properly.

WOOD CHIP SMOKER BOX (IF EQUIPPED)

Your optional backburner is supplied with a wood chip smoker box. The wood chip smoker box is designed to sit on top of the backburner assembly over the notch in the heat deflector (see Fig. 34-1). This box is designed to be used when the backburner is in use.

To use the box, dampen your favorite wood chips and put them inside the box and set in place. If you wish to refill the wood chip smoker box while hot, carefully handle it wearing heat-resistant gloves and using a pair of insulated pliers. You must be very careful not to get burned.

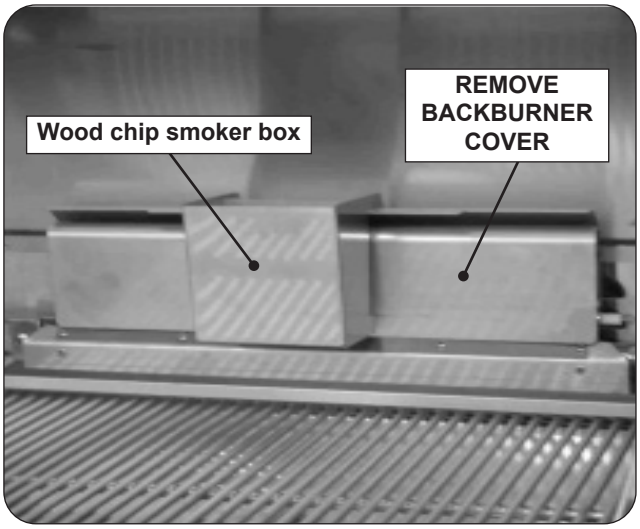

Fig. 34-1 Wood chip smoker box

SERVICING AND CLEANING

Your grill requires regular cleaning and maintenance. Refer to these instructions for details. Performing these procedures will ensure proper operation, appearance, and safety.

WARNINGS

- Prior to servicing or cleaning make sure the unit is completely cool, the control knobs are turned to the OFF position, and the gas supply is shut off.
- Wear appropriate gloves and safety glasses during any servicing or cleaning.
- DO NOT spray any cleaner or liquids on the grill when hot.
- The grill MUST be cleaned regularly to prevent grease build-up and other food deposits. A clean and well maintained grill prevents the risk of grease build-up and grease fires.
- Verify proper operation after servicing or deep cleaning.
- See INSTALLATION, OPERATION, AND SAFETY INFORMATION section for additional related information.

CLEANING YOUR GRILL

Before Each Use

1. **Inspect and clean the exterior surfaces of the unit:** With a cool grill, clean any dust, grease, splatter, or spills as needed with a damp clean cloth.

After Each Use

1. **Perform a burn-off and clean the cooking grids:** Operate the grill on high with the hood closed for 15 minutes to burn-off food and grease and allow for an easier cooking grid clean. Then turn OFF the grill and use a grill brush to clean the cooking grids of all residue. Use long-handled insulated BBQ tools and wear an insulated glove / oven mitt.
2. **Check and clean your drip tray:** When the grill is cool, carefully remove the drip tray (via the enclosure side access door/panel) and dispose of contents appropriately. If tray is equipped with a liner, dispose of the liner. Clean tray in a soapy water solution if needed. For tough deposits, a copper pad can be used. Rinse and dry completely. Replace a new liner and insert the tray back into the grill. Order more drip tray liners through your local dealer.
3. **Cover your grill:** Once the grill is dry and cool, cover your grill with a Fire Magic protective cover (not included).

Twice A Year (or as needed) - Deep Clean

1. **Interior of grill:** In addition to cleaning the cooking grids and drip tray, a deep clean of the interior of the grill, burners, and all components MUST be performed twice year (or as needed depending on use). Refer to the CARE, CLEANING, & MAINTENANCE GUIDE provided with your grill, or simply scan the QR code on the right.

Important: The burner ports and carry-over ports/slots MUST be kept clean to ensure proper ignition and operation. The guide provides all details on cleaning.

2. **Exterior of grill:** With a cool grill, use a grill cleaner (or a soapy water solution) and a clean cloth to remove grease and dirt from the outside of the grill. For tough deposits, a copper pad can be used. Always wipe with the grain. Rinse and dry completely. Then follow up with a stainless steel cleaner and a clean cloth. DO NOT use other cleaners or chemicals.

   If this routine cleaning is not performed, the stainless steel may become dull and develop surface rust (due to use and atmospheric conditions). If left uncleaned, significant damage and pitting may occur.

Fig. 35-1 Wipe with grain

Important: DO NOT use steel wool, any other metal tools, or any other cleaners/chemicals to clean the exterior other than recommended above. Such items promote rust.

Note: Due to the nature of stainless steel, temperatures produced by the grilling process will cause discoloration. This can be reduced by routine cleaning.

For Environments High In Salt, Chloride, Or Other Corrosive Chemicals

When this grill is installed in a corrosive environment such as near the ocean (salt air), poolside (chlorine and/or pool chemicals) or any other location with exposure to high salt/chloride content or corrosive chemicals/solutions, it will be more susceptible to corrosion and MUST be maintained/cleaned more frequently.

- DO NOT store any corrosive chemicals (chlorine, hydrochloric acid, fertilizer, etc.) near your stainless steel grill.
- DO NOT allow any corrosive materials (masonry dust, debris, etc.) to settle on your stainless steel grill.
- These environments, chemicals, and materials may cause the 304 stainless steel to develop surface rust and consequently pitting. Under these conditions the grill exterior MUST be cleaned at least monthly. Inspect your grill often and clean accordingly.

Protecting Your Grill

An optional Fire Magic protective cover will protect your grill when not in use. Install the cover on a cool and dry grill. DO NOT cover a damp grill. During high humidity or after rainy conditions, remove the cover to dry trapped moisture if present. (If the cover is installed over a damp grill it can cause surface rust.)

Ensure that the INSIDE of the cover is DRY before putting it back on the grill.

TOP PANEL REMOVAL

Note: To remove the panel safely and evenly, performing this procedure may require more than one person.

1. **Turn the control knobs to the OFF position and turn off the gas supply to the grill.**
2. Pull the control knobs from their stems and set them aside (see Fig. 37-1, A).
3. Carefully, but firmly, detach the top panel from the frame (see Fig. 37-1, B).
4. While lifting the top panel, carefully disconnect the igniter wires from underneath the top panel to completely free the panel from the grill (see Fig. 37-1, C).

Note: Lift the panel carefully and slowly to avoid damaging the oven lid and any other components.

Important: During reinstallation; prior to opening the gas shut-off valve, be sure the control knob(s) are in the OFF position.

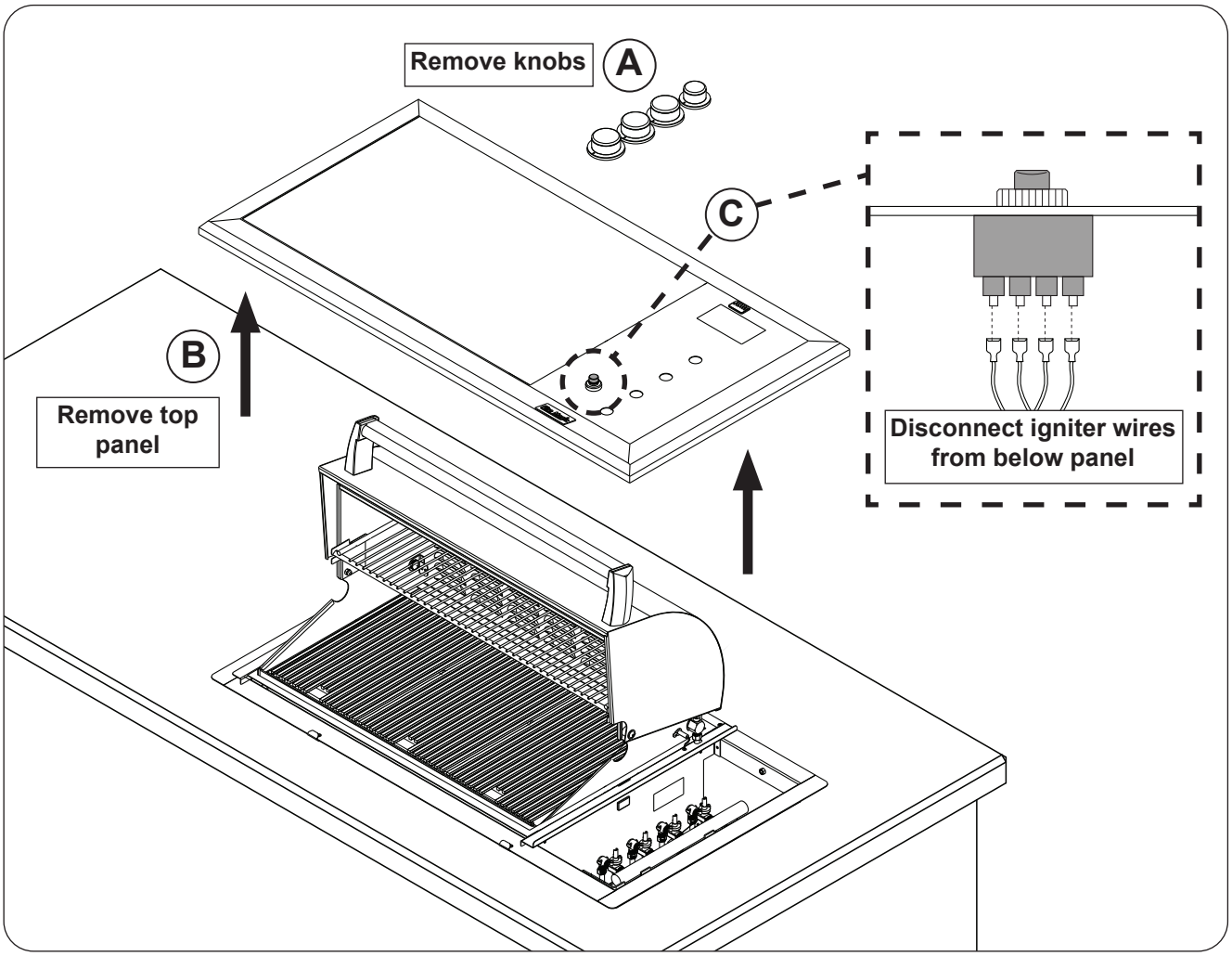

Fig. 37-1 Top panel removal

IGNITER BATTERY REPLACEMENT

1. Remove the igniter cover by turning it counterclockwise (see Fig. 38-1).

Important: Do not attempt to pull or turn the rubber cap.

2. Remove battery for replacement. Install the new AAA battery with the negative (-) end out (see Fig. 38-2).
3. After properly inserting the battery, replace the igniter cover by turning the cap clockwise (see Fig. 38-2).

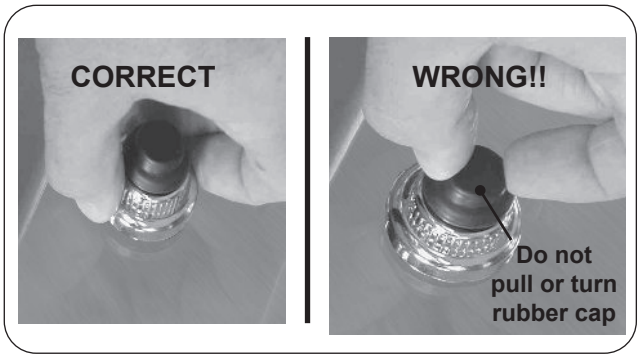

Fig. 38-1 Remove igniter cover

RUBBER CAP

Note: If you have accidentally removed the rubber cap, follow the instructions below to replace it.

1. Pull the rubber cap and the inner plastic sleeve apart (see Fig. 38-3, A).
2. Carefully insert the rubber cap into the igniter cover so it sits behind inner lip (see Fig. 38-3, B).
3. Turn the cap over and slide the inner plastic sleeve into the cap (see Fig. 38-3, C).

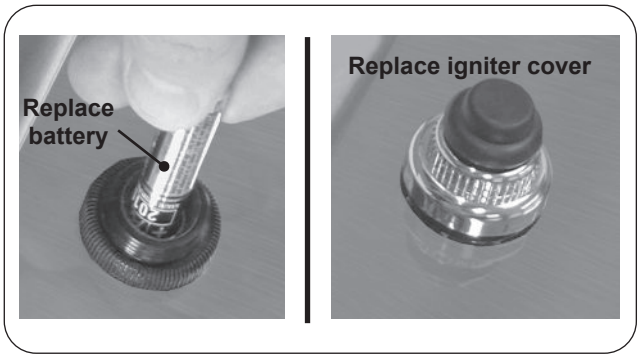

Fig. 38-2 Replace battery

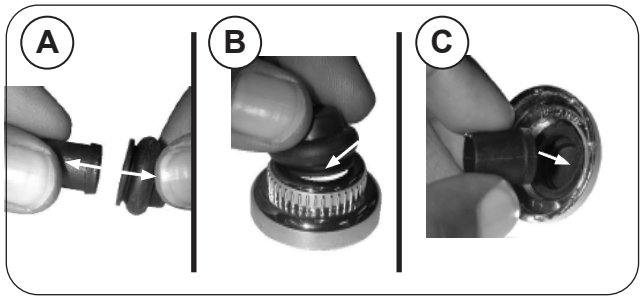

Fig. 38-3 Rubber cap replacement

MAIN BURNER REMOVAL

1. **Ensure the knobs are in the OFF position, and the gas supply is turned off.**
2. Remove the cooking grid and flavor grid from above the burner that is to be removed and set them aside.
3. Locate and remove the burner retaining clip from behind the burner using a flat head screwdriver (see Fig. 38-4).
4. **Remove the burner:**
   - **a.** Pull it toward the front of the grill.
   - **b.** Lift the far end out of the notch.
   - **c.** Pull the burner away from the manifold, **taking care to not lose the air shutter and spring**, which could detach when the burner is removed.
5. **Replace the burner:**
   - **a.** Install the air shutter spring, then the air shutter over the orifice holder fitting in the order and position as shown in Fig. 38-4.
   - **b.** Carefully place the burner back into position, resting the burner on the back flange of the inner liner so that the brass orifice and orifice holder fitting projects well into the burner.

Note: The air shutter must be re-adjusted after removing the burner to ensure proper combustion (see the AIR SHUTTER ADJUSTMENT section).

   - **c.** Replace the burner retaining clip.
6. Repeat these steps for the other burners, if needed.

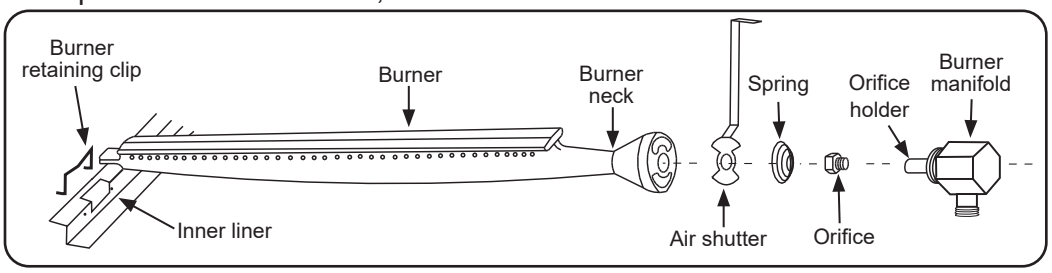

Fig. 38-4 Burner components diagram

CHECKING AND CONVERTING GAS TYPE

WHEN CONVERTING TO A NEW GAS TYPE, THE ENCLOSURE MUST HAVE PROPER VENTILATION FOR THE NEW GAS TYPE. See the ENCLOSURE REQUIREMENTS section for complete details.

This unit comes from the factory configured for one type of gas, as marked on the label located underneath the top panel. For access, see the TOP PANEL REMOVAL section.

Orifices are included to convert your appliance from natural gas to L.P. or vice versa. The professional installer must reference the steps below for conversion information.

1. Change brass gas orifices (included at original shipping) on each burner to match the new gas type (see MODEL SPECIFICATIONS section, Table 2, and the CHECK/ CONVERT BURNER ORIFICES section).
2. Switch the convertible gas regulator to match the new gas type (see section below).
3. Plumb the unit as appropriate for the new gas supply.
4. Apply the label for the new gas (included at original shipping) over the old gas information found on your unit.

WARNING: HAZARDOUS OVERHEATING WILL OCCUR IF A NATURAL-GAS ORIFICE IS USED WITH PROPANE GAS. IF YOU ARE NOT SURE IF THE CORRECT ORIFICES ARE INSTALLED, OR IF AN ORIFICE CHANGE IS NECESSARY, REFER TO THE FOLLOWING INSTRUCTIONS.

CAUTION: Make sure the unit is completely cool and is isolated from gas and electrical supplies before beginning the tasks outlined below.

CAUTION: For your safety, exercise caution and use adequate hand protection (such as gloves) when handling potentially sharp sheet-metal parts.

CHECKING AND CONVERTING THE REGULATOR

Regulator: note cap on top

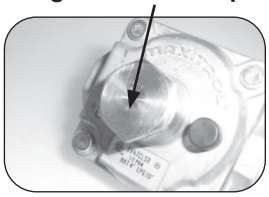

Note: Each end of the plastic converter is engraved with either the letters “NAT” or “L.P.” (propane) for the respective gasses. When the converter is in the cap and the cap is held uppermost, the letters seen indicate the gas that the regulator is set up for.

To convert the regulator from one gas to another, follow steps 1-4.

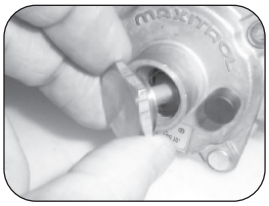

STEP 1:

Unscrew and remove the cap from the regulator, extracting the converter.

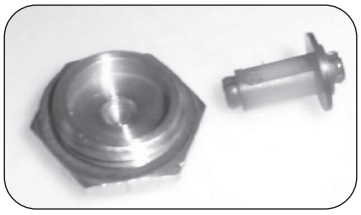

STEP 2:

Remove the converter (the plastic stalk) by carefully pulling it away from the center of the cap (it will snap out of its seating).

Read gas type here

STEP 3:

Turn the converter around and replace it carefully, into the center of the cap (it will snap into place). Check that you can read the type of gas the unit is set for.

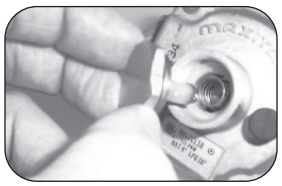

STEP 4:

Replace the unit into the regulator and screw down until snug.

WARNING

THIS APPLIANCE REGULATOR IS RATED FOR $^1/_2$ PSI MAXIMUM. IF YOUR GAS SUPPLY IS GREATER THAN $^1/_2$ PSI, AN ADDITIONAL REGULATOR MUST BE INSTALLED TO REDUCE THE INPUT PRESSURE TO THE UNIT to $^1/_2$ PSI OR LESS. SEE GAS-SUPPLY PLUMBING REQUIREMENTS SECTION FOR PROPER GAS-SUPPLY PRESSURE.

CHECK/CONVERT BURNER ORIFICES

Refer to Table 2 under the MODEL SPECIFICATIONS section for the proper orifice size needed.

1. Remove the cooking grids and flavor grids from your grill.
2. Remove the top panel. See the TOP PANEL REMOVAL section for details.
3. Remove the burner. See the MAIN BURNER REMOVAL section for details.
4. Using a 3/8" socket, remove the orifice from the orifice holder on the burner manifold and check the number stamped on the face. Repeat for each burner as necessary.
5. Install the air shutter spring and the air shutter over the orifice holder fitting in the order and position shown in Fig. 40-1. Carefully place the burner(s) back in position, resting on the back flange of the inner liner so that the brass orifice and orifice holder fittings project well into the burners.

Note: The air shutter must be re-adjusted after removing the burner to ensure proper combustion (see the AIR SHUTTER ADJUSTMENT section).

6. Replace the burner hold down clip.
7. Repeat this procedure for the other burner (if needed).
8. Reinstall the top panel. See the TOP PANEL REMOVAL section. When connecting the igniter wires, the wires can be plugged into any terminal (Fig. 40-2).

Important: Test the electrodes for spark before securing the panel to the frame (see also the IGNITER BATTERY REPLACEMENT section).

9. Replace the control knobs.
10. Replace the flavor grids and then the cooking grids so that the cutout section of the grid is in front.

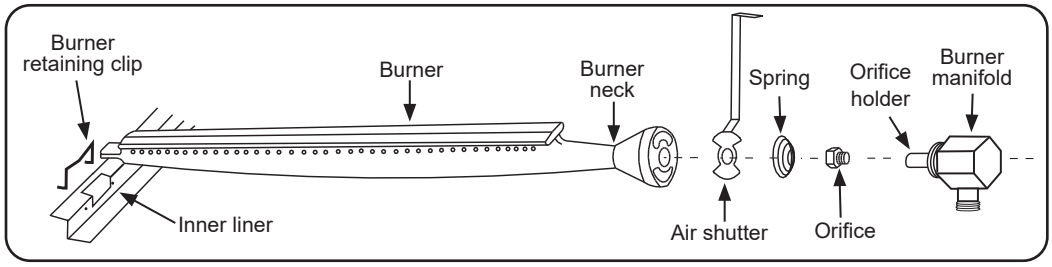

Fig. 40-1 - Burner orifice diagram

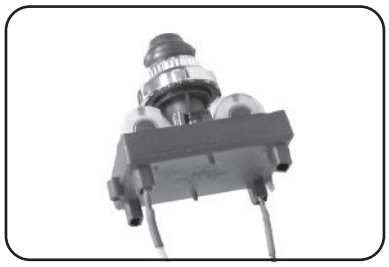

Fig. 40-2 Spark generator

CHECK/CONVERT BACKBURNER ORIFICES (if equipped)

Before beginning, make sure you have the proper tools for the task. This task requires:

- a #2 Phillips-head screwdriver
- a #2 flat-head screwdriver
- a 3/8" wrench or socket screwdriver

Note: It may be necessary to remove the rotisserie rod before beginning this procedure.

1. Remove the warming rack, if installed, and set it aside.
2. Remove the backburner cover, if installed.
3. Unscrew both backburner face plate screws using a Phillips-head screwdriver and set them aside.
4. Remove the backburner face plate by pulling the bottom toward the front of the grill and rotating it upward and outward until the two top tabs can be removed from the back wall of the grill. Set it aside.
5. Remove the backburner assembly anchoring screw on the lower left of the backburner using a Phillips-head screwdriver and set it aside.

Continued on next page

6. Pull the backburner assembly to the left, clear of the orifice, and then rotate the top forward and downward and lay it face down across the main burner dividers.

CAUTION: Be careful not to damage the wires connected to the backburner assembly.

7. Use the socket driver to remove the exposed orifice and replace it with the correct orifice for the gas to be burned (see the Table 2 for correct orifice sizes).
8. Replace the backburner assembly and re-insert the anchoring screw. Center the backburner assembly so that the backburner face place will fit over it. Tighten the anchoring screw using a Phillips-head screwdriver.
9. While the backburner faceplate is still off, adjust the backburner air shutter opening size by loosening the air shutter adjustment screw with a flat-head screwdriver and sliding the air shutter to the position indicated in the TABLE 1; then re-tighten the adjustment screw. (see AIR SHUTTER ADJUSTMENT section).
10. Replace the backburner face plate by first inserting the upper tabs into the slots in the back wall of the grill and then rotating the bottom downward and inward.
11. Replace the two backburner faceplate screws using a Phillips-head screwdriver.

Note: Re-attaching the backburner faceplate may be easier if the left screw is replaced before the right screw.

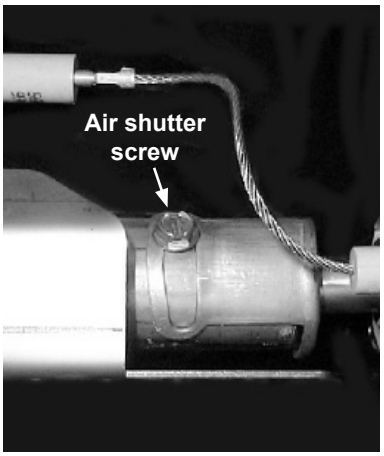

Fig. 41-1

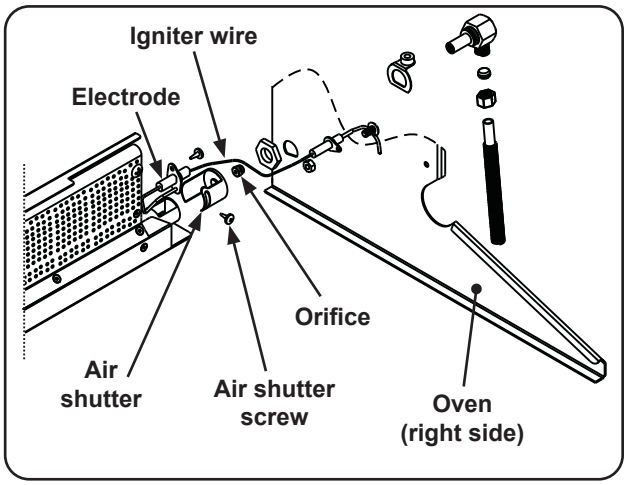

Fig. 41-2

AIR SHUTTER ADJUSTMENT / BURNER FLAME INSPECTION

Important: Air shutters are preset at the factory. However, maintenance, gas conversion, altitude, or other local conditions may make it necessary to adjust the air shutters.

Note: To verify proper settings, the flames of the burners should be visually checked for proper flame appearance and behavior. Light the grill with the burner(s) on HI setting. Allow at least 2 minutes to burn. See below and Fig. 42-1. The flames should:

- be blue and stable with little to no yellow tips
- burn quietly, and appear to touch the burner

If the flames appear unstable, yellow, noisy, or lift away from the burner, locate the appropriate section for your burner type, and follow the steps.

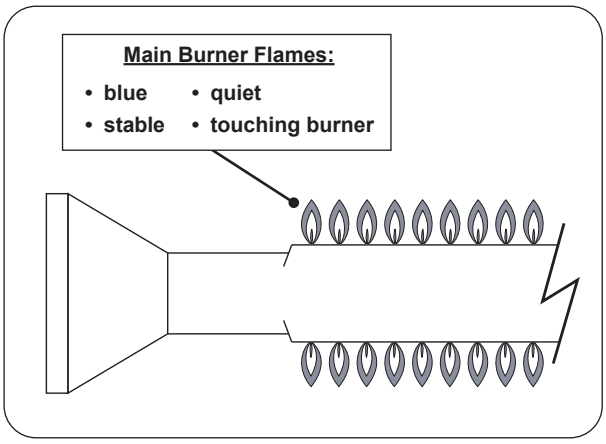

Fig. 42-1 Proper flame appearance

Main Burner

Begin with a completely cool unit. Make note of the current air shutter lever location. Remove the burners (see BURNER REMOVAL section). First ensure the burner orifice, ports, venturi tubes, and air shutter openings are all clear of any insect or insect nests. If they are blocked, clean them, reinstall the burners, set the air shutters to the settings previously noted, and reinspect the flames. If adjustment is still needed, proceed to the steps below.

Main burner air shutter adjustment levers are easily accessed by removing the top panel (when cool). See the TOP PANEL REMOVAL section for details. The air shutters are controlled by the adjustment levers at the front of the burners (see PARTS LIST and Fig. 42-2). Each air shutter has a small dimple that allows it to lock into notches in the burner face. This prevents the air shutter from moving. See Fig. 42-2.

Note: To light the unit with the top panel removed, the control knobs must be installed to their corresponding valve stems and the burners will need to be manually lit. See LIGHTING INSTRUCTIONS for details.

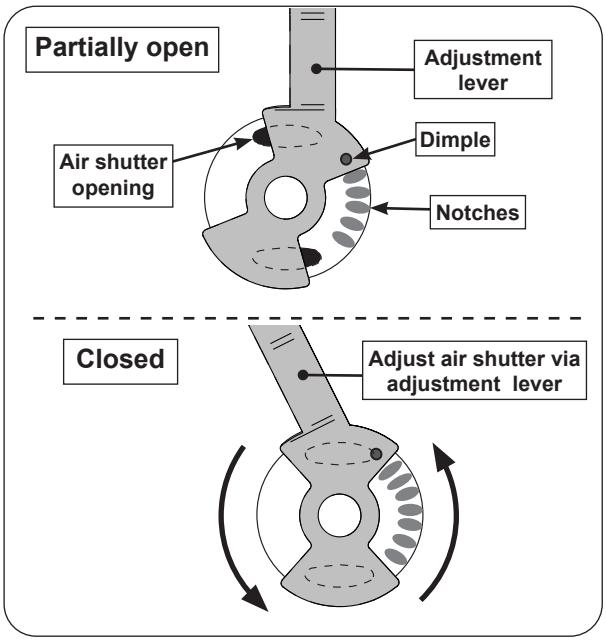

Fig. 42-2 Main burner air shutter adjustment

WARNING: ONLY ADJUST 2 AIR SHUTTERS VIA THE CORRESPONDING CONTROL KNOB AT ONE TIME. SHUT OFF THE BURNERS PRIOR TO MOVING ON TO THE NEXT SET.

1. Light the corresponding burner pair in accordance with the LIGHTING INSTRUCTIONS and burn for two minutes with the knob on HI LIGHT and the oven open.
2. After burning for two minutes, open the air shutters **using the adjustment levers** until the flames lift off, or appear not to be touching the burners (Fig. 42-1).
3. Begin closing the air shutters **with the adjustment levers** until the flames appear to burn while touching the burner ports (Fig. 42-2). The air shutters have a small dimple that allows it to lock into notches in the burner face. This prevents the air shutters from moving.

Note: You may then see short yellow tips on the flames. If flames are a lazy yellow, open the air shutters until the flame is blue with yellow tipping.

Note: Grills, in some installations, achieve a better air/gas mixture and will ignite more quickly if the valve is first turned beyond HI LIGHT to LOW for lighting.

4. Shut off the burners, then repeat for the next set.
5. Reinstall the top panel.

Backburner (if equipped)

Begin with a completely cool grill. Remove the backburner (see CHECK/CONVERT BACKBURNER ORIFICES section for details). First ensure the burner orifice, ports, venturi tube, and air shutter are all clear of any insect or insect nests. If they are blocked, clean them, reinstall the burner, and reinspect the flames. If adjustment is still needed, proceed to the steps below.

Note: The backburner air shutter can be safely adjusted with the backburner lit if it is adjusted using a long-handled screwdriver or well-insulated fire and heat-resistant gloves.

1. To adjust the air shutter, first light the backburner on HI.
2. Loosen the adjustment screw with a flathead screwdriver, then carefully rotate the shutter to open or close it. See Fig. 43-1 for details.
   - Begin with the appropriate factory setting for your model (see Table 2 if needed).
   - If the flames along the bottom of the backburner are excessively yellow (insufficient air), open the shutter to allow more air to the burner. If the flames are noisy and lifting off the burner in some areas, close the shutter to allow less air to the burner. Adjust accordingly.

Note: Make minimal adjustments. Very small changes result in major changes in flame appearance.

3. Once finished, carefully re-tighten the adjustment screw and shut off the backburner.
4. Allow the unit to cool completely, then re-install all components that were removed.

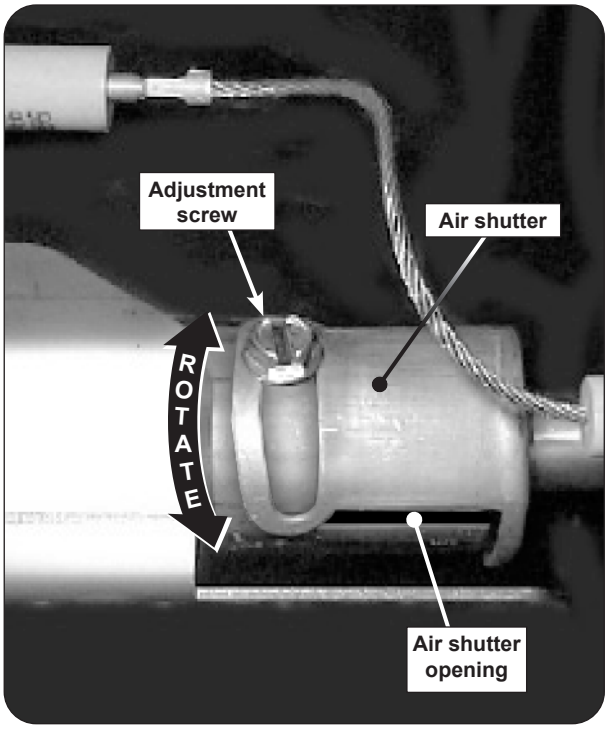

Fig. 43-1 Backburner air shutter adjustment detail

VALVE "LOW" SETTING ADJUSTMENT

Stability of the "low" setting on all burners may vary due to wind direction, appliance configuration, and position. If your burner goes out when set on low, the valve "low" setting needs adjustment.

Note: Adjustments MUST only be performed by a qualified professional service technician.

To adjust the valve "low" setting:

1. **Ensure the unit is completely cool and the knobs are in the OFF position.**
2. Remove the cooking grids and flavor grids.
3. Light the burner on HIGH, then turn the burner to LOW setting. While the burner is lit, remove the control knob from the valve.
4. Locate the FLATHEAD adjustment screw found inside the valve stem (see Fig. 44-1).
5. Using a flathead screwdriver, slowly turn the adjustment screw a little at a time (30° to 45°) in either direction. Adjust the screw as needed until the flame is approximately 1/4" in height from all the burner ports, and the flames are stable.
6. Once the appropriate setting is reached, re-install the control knob and shut off the burner valve.
7. Repeat this procedure for other burner valves, if needed.
8. Re-install the flavor grids, cooking grids, and any other components that were removed.

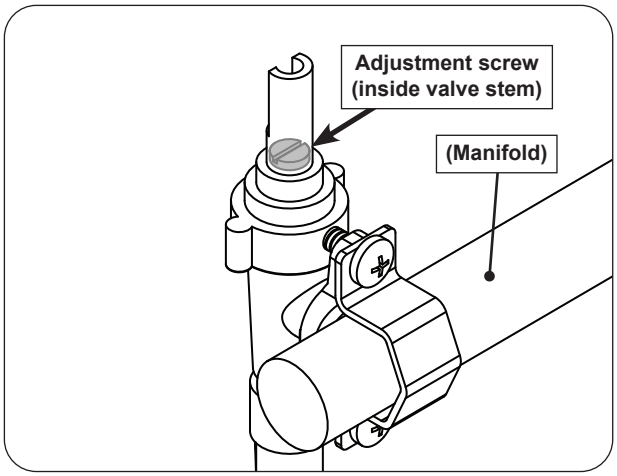

Fig. 44-1 Valve adjustment screw location

TROUBLESHOOTING

If you have trouble with the unit, please use this list to identify the problem. By trying one or more of the solutions to the possible cause, you should be able to solve the problem. If this list does not cover your present problem, or if you have other technical difficulties with the unit, please contact your local dealer.

PROBLEM	POSSIBLE CAUSE	CORRECTION
Ignition system failure	1. Improper air shutter adjustment	1. Adjust air shutters.
	2. Ignition wire disconnected	2. Reconnect wires into generator.
	3. Igniter malfunction	3. Contact dealer for replacement.
	4. Low gas pressure	4. Have gas company check the operating pressure at the unit.
	5. Dead battery	5. Replace battery.
Insufficient heat / low flame	1. Burner ports clogged	1. Remove burners and clean out ports.
	2. Improper air shutter adjustment	2. Adjust air shutters.
	3. Using propane orifice for natural gas	3. Change orifices.
	4. Low gas pressure/flame (natural)	4. Have a qualified professional service technician check for proper gas supply, setup, and pressure.
	5. Low gas pressure/flame (propane)	5. Refill propane tank, or reset propane tank safety*: Shut off all valves (including propane tank) and follow lighting instructions exactly.
	6. L.P. regulator hose stuck/damaged	6. Replace L.P. regulator hose.
Uneven heating	1. Burner ports partially blocked by debris	1. Remove burners and clean out ports.
	2. Small spiders or insects in burner	2. Inspect burners for spider webs or other debris that may block gas flow.
	3. Improper air shutter adjustment	3. Adjust air shutters.
Burner goes out on LOW	1. Valve “Low” setting needs adjustment	1. Light burner on HIGH, immediately turn to LOW setting. Remove knob from valve and using a small flat screwdriver, slowly turn the adjustment screw in the stem, a little at a time (30° to 45°), in either direction, until the flame is approximately 1/4” in height from burner ports.
Rotisserie noisy	1. Rotisserie out of balance	1. Adjust counterbalance.

Note: *Propane tanks are equipped with a safety shutdown device that may cause low or no gas/flame at the burners if operating and lighting instructions are not followed exactly. **If you suspect the propane tank safety shutoff is in effect:** 1) Shut off all grill valves. 2) Shut off tank valve. 3) Open and close a main burner valve. 4) Open tank valve. 5) Follow the LIGHTING INSTRUCTIONS. Lighting instructions are located in the owner’s manual and printed on the unit's top panel. If the problem persists, continue troubleshooting, or contact your local dealer or distributor for assistance.

WARRANTY

PETERSON FIRE MAGIC GRILLS AND ACCESSORIES

LIMITED WARRANTY

R.H. Peterson Co. ("RHP") warrants your Fire Magic® grill to be free from defects in material and workmanship.

Fire Magic cast stainless-steel gas burners, Choice stainless steel U shaped burners, cooking grids, and Barbecue housings are warranted **as long as the original purchaser owns them -- LIFETIME**. (Except as described below.)

Fire Magic brass valves, manifold assemblies, inner liners, porcelain housings (including ovens and barbecue faces), and **backburner assemblies** (except ignition systems) are warranted for **FIFTEEN (15) YEARS**.

Fire Magic Electric Grill stainless steel cooking grids and stainless steel housings are warranted for **TEN (10) YEARS**. (Except as described below.)

Fire Magic built-in pizza ovens and built-in and portable griddles (except ignition system and thermostat) are warranted for **TEN (10) YEARS**.

Fire Magic Infra-red burners, flavor grids, and charcoal stainless steel grills are warranted for **FIVE (5) YEARS**; except for the charcoal pan, charcoal grid, thermometer, and ash catch tray, which are warranted for **ONE (1) YEAR**.

Fire Magic sideburners, exterior Glass Fiber Reinforced Concrete (GFRC) grill island systems, and all other grill, pizza oven and griddle components (except ignition systems and electronic parts) are warranted for **THREE (3) YEARS**.

Fire Magic grill, pizza oven and griddle ignition systems (excluding batteries), electronic components (including lights, thermometers and thermostats) and grill and pizza accessories are warranted for **ONE (1) YEAR**.

A COPY OF YOUR SALES SLIP FOR PROOF OF PURCHASE IS REQUIRED

This warranty applies to the original purchaser for products which are installed in the United States or Canada and which are operated and maintained as intended for single family residential usage (if the unit is installed in a multi-user setting, a separate Multi-User Limited Warranty applies and is available from RHP). This warranty is valid only with proof of purchase, commences on the date of purchase, and terminates (both as to original and any replacement products) on the anniversary date of the original purchase of the product per the above schedules.

This warranty covers defects in material and workmanship. This warranty **does not** cover parts which become defective as a result of negligence, misuse, use not in compliance with the Installation and Owner's Manual, accidental damage, improper handling, improper storage, improper installation, **lack of required routine maintenance** (as specified in the Installation and Owner's Manual), electrical damage, local gas impurities or failure to protect against combustible materials. Product must be installed (and gas must be connected) as specified in the Installation and Owner's Manual by a **qualified professional installer**. This warranty **does not** apply to rust, corrosion, oxidation, or discoloration unless the affected part becomes inoperable. RHP products including valves, pilots and controls, are designed and certified to be used as a system. Modifications to products which are not specifically authorized will void this warranty and could render the product to be unsafe. Burners, valves, parts, accessories, remotes, etc. used with this product must be RHP products or this warranty is void.

Warrantied items will be repaired or replaced at RHP's sole discretion. This warranty **does not** cover labor or labor related charges, except as provided by separate specific written programs from RHP. All repair work must be performed by a qualified professional service person and requires prior approval of RHP.

RHP may require the defective product or part to be returned to the factory to determine the cause of failure. RHP will pay freight charges if the product or part is determined to be defective. This warranty does not cover breakage in shipment from our independent distributor to its customer if the damage is determined to have occurred during that shipment.

This warranty specifically excludes liability for **indirect**, **incidental**, or consequential damages. Some states and provinces do not allow the exclusion or limitation of incidental or consequential damages, so the above exclusion may not apply to you. This warranty gives you specified legal rights, and you may have other rights that vary from state to state or province.

For additional information regarding this warranty, or to place a warranty claim, contact the RHP dealer where the product was purchased.

When contacting your RHP dealer or the R.H. Peterson Co., please provide the following information:

- Your name, address, telephone number, e-mail
- Sales receipt showing where purchased and date purchased
- Model number, serial number of product, date code
- Relevant information: installer, additions, repairs, when defect was first noted

TO REGISTER YOUR PRODUCT ONLINE GO TO: WWW.RHPETERSON.COM, AND CLICK ON PRODUCT REGISTRATION. THANK YOU FOR YOUR PURCHASE.

Quality Check				**Date:**_____	
Burner Orifices	**Nat.**	**L.P.**	**Leak Test:**	_____	**Model#:** _____
Main:	____	____	**Burn Test:**	_____	**Serial#:** _____
Other:	____	____	**Gas Type:**	Nat. / L.P.	**Air Shutter:** _____
					Inspector: _____

R.H. Peterson Co. • 14724 East Proctor Avenue • City of Industry, CA 91746