USE & CARE GUIDE

KAMADO CHARCOAL GRILL: BLZ-20-KAMADO

WARNING

I) Do not store or use gasoline or other flammable liquids or vapor in the vicinity of this or any other grill

2) A LP cylinder not connected for use shall not be stored in the vicinity of this or any other grills

ATTENTION INSTALLER:

PLEASE LEAVE THESE INSTRUCTIONS WITH THE CONSUMER.

ATTENTION CONSUMER:

PLEASE READ & RETAIN THESE INSTRUCTIONS FOR FUTURE REFERENCE AND BEFORE INSTALLING OR OPERATING.

- CONTACT INFORMATION -

Blaze Outdoor Products

6620 Greenwell Springs Rd, Baton Rouge, LA 70805

866-976-9510

CustomerService@BlazeGrills.com

www.BLAZEGRILLS.COM

Table of Contents

I. General Safety and Installation Warnings 3-4

i. Charcoal and Grill Safety and Instructions 4-7

II. Location of Grill 7-8

III. Electrical Safety and Installation Warnings 9

IV. Unpacking Unit 10

V. Installing the Grill in a BBQ Island 11-12

i. BBQ Specifications 12-13

ii. Before First Operation 14

VI. Using the Grill 15

VII. Starting the Fuel 16-17

VIII. Setting Temperature and Cooking Practices 17-20

IX. Smoking 20

X. Tips and Precautions 20-21

XI. Cleaning 22-23

XII. Warranty Registration 24

XIII. Grill Parts 25

XIV. Notes 26

XV. Blaze Product Registration 27

General Safety and Installation Warnings

NOTE: The manufacturer cannot be held responsible for damage or injury caused by improper use of this grill. When using your Blaze grill, please read and follow these basic precautions:

⚠ WARNING

To reduce the risk of fire, electric shock, or injury, read and follow these basic precautions before installing/operating your grill.

CALIFORNIA PROPOSITION 65 WARNING

WARNING: This product can expose you to chemicals including Chromium (hexavalent compounds), which are known to the State of California to cause cancer and birth defects or other reproductive harm. For more information go to: www.P65Warnings.ca.gov

WARNING: Improper installation, use, adjustment, alteration, service or maintenance can cause injury or property damage. Read the installation, operating and maintenance instructions thoroughly before installing or servicing this equipment.

⚠ WARNING

EXPLOSION HAZARD

Do not use the grill as storage area for flammable materials. Keep area clear and free from combustible materials, gasoline, and other flammable vapors and liquids. Failure to do so can result in death, explosion, or fire.

IMPORTANT: *Consult the AHJ (Authority Having Jurisdiction) or local contractor of any uncertainty.*

⚠ WARNING

This unit is for outdoor use only!

Do not operate in a building, garage or any other enclosed or partially enclosed areas. This could result in carbon monoxide buildup which could result in injury or death.

⚠ WARNING

Every part of the charcoal grill will become hot during use. Exercise caution while around the grill and always wear gloves. Never leave the grill unattended. Never allow children or pets around the grill's area when in use. Only use BBQ tools with long heat resistant handles.

FOR YOUR SAFETY

1. Do not store or use gasoline or other flammable vapors and liquids in the vicinity of this or any other grill.
2. Do not store any propane/butane (G31-G30) cylinder (that is not connected for use) in the vicinity of this or any other grill.

CHARCOAL SAFETY

- Never add lighter fluid to coals that are already hot and or warm.
- Never use gasoline, kerosene, or other highly volatile fluids as a starter due to the explosion hazard.
- Never use an electric starter in the rain or when standing on wet ground.
- When using instant light briquettes, do not use any other starters along with them. Do not add additional instant light briquettes once the coals are lit. Only add regular charcoal briquettes if more are needed.
- Once the grill is lit, do not touch briquettes or wood chunks to see if they are hot. Keep grill uncovered until ready to cook.
- Always allow coals to burn out completely and let ashes cool completely before disposing.
- Dispose of cold ashes by wrapping them in heavy duty aluminum foil and placing them in a non-combustible container. Be sure no other combustible materials are nearby
- Only place charcoal in the charcoal tray and nowhere else
- Extinguished coals and ashes must be placed within a safe distance from all structures and combustible materials.
- Never leave coals and ashes in the grill unattended.

WARNING: Every part of the grill will be hot during and for a period of time after use. Use caution, keep children away from the grill, and always use gloves and protective clothing during use. Never touch the Kamado body while in use.

- TAKE EXTREME CAUTION WHEN OPENING THE GRILL LID AS HOT COALS CAN FLASH SHOULD THEY RECEIVE A RUSH OF AIR. ALWAYS ENSURE BOTH THE TOP AND BOTTOM VENTS ARE OPEN FULLY BEFORE OPENING THE GRILL LID. ALWAYS OPEN THE LID TO ROUGHLY 1-2" AND HOLD IT THERE FOR 5-10 SECONDS TO LET OXYGEN SLOWLY ENTER THE GRILL. THEN COMPLETELY LIFT THE LID OPEN SLOWLY. AT ALL TIMES THE USE OF LONG HEAT RESISTANT GLOVES IS NECESSARY FOR SAFETY.

Please read all instructions before installing or operating your grill to prevent injury and grill damage.

- All charcoal grills will get hot during use. Use extreme caution when operating the grill. Always use high heat gloves during use.
- Do not touch hot surfaces. Always use the handle to open or close the grill. Always use high heat gloves during use.
- Close supervision is necessary when this or any grill is used near children. Keep children away from the grill during operation and until the grill has cooled off.
- Do not store any LP cylinder or tank in the area of this grill or any other grill. Never store an LP cylinder or tank indoors, or within the reach of children.
- The use of accessories or components not recommended by the grill manufacturer may cause injuries and will void warranty.
- Never lean over the cooking surface when lighting or operating the grill.
- Use cooking utensils with wood handles and insulated oven mitts when operating the grill.
- Do not store anything in the grill. Make sure food is not forgotten in the grill; forgotten items could melt or catch fire when the grill is lit.
- To prevent injuries, do not use accessories not recommended by the manufacturer. Always use high heat gloves during use.
- Before cleaning the grill, disconnect the rotisserie and "trip" the circuit breaker.
- Never use the grill in windy conditions. If located in a consistently windy area (oceanfront, mountaintop, etc.) a wind break will be required. Winds blowing into or across the grill exhaust, can affect performance and / or cause various parts of the grill to get hotter than expected.
- Always open the grill hood carefully, using only the handle - the grill body will be hot. Always use high heat gloves during use.
- Children should not be left alone or unattended in an area where any grill is in use. They should never be allowed to touch, sit or stand on any part of the grill.

- Do not store items of interest to children in cabinets above the grill or in the grill. Children climbing on the grill to reach these items could be seriously injured.
- Wear proper clothing when operating this grill. Loose-fitting or hanging garments should never be worn while using the grill. Always use high heat gloves during use.
- Do not leave the grill unattended while in use.
- Do not use water on grease fires! A violent steam explosion may result. Instead, smother the fire with a multipurpose ABC extinguisher.
- Never look into the top vent of the kamado when it is in use. The escaping exhaust is very hot and could cause injury.
- Keeping air flow through unit is critical for performance and safety.
- **WARNING:** Every part of the grill will be hot during and for a period of time after use. Use caution, keep children away from the grill, and always use gloves and protective clothing during use. Never touch the kamado body while in use.
- TAKE EXTREME CAUTION WHEN OPENING THE GRILL LID AS HOT COALS CAN FLASH SHOULD THEY RECEIVE A RUSH OF AIR. ALWAYS ENSURE BOTH THE TOP AND BOTTOM VENTS ARE OPEN FULLY BEFORE OPENING THE GRILL LID. ALWAYS OPEN THE LID TO ROUGHLY 1-2" AND HOLD IT THERE FOR 5-10 SECONDS TO LET OXYGEN SLOWLY ENTER THE GRILL. THEN COMPLETELY LIFT THE LID OPEN SLOWLY. AT ALL TIMES THE USE OF LONG HEAT RESISTANT GLOVES IS NECESSARY FOR SAFETY.
- The hinge mechanism should be checked regularly to ensure the fasteners are secure to the grill body. Periodic lubrication of this mechanism will also smooth opening and closing of the grill over time.
- When moving or transporting your grill, NEVER do so by lifting on the hinge of the grill. The lower air inlet can be used for lifting as long as gloves are used. Always use 2-3 people when moving the grill.
- Never extinguish a fire with water. Always close the lid and your air vents to control a fire inside the unit.
- Due to the heavy nature of the kamado, always use 2-3 people when moving the unit. **Never move the unit when hot.**
- Inspect the hinge upon unpacking and before each use. The fasteners could have come loose and might need to be tightened.
- Take caution when removing/handling anything that has been inside the grill. The cooking accessories, cooking grids and inner trays, optional rotis parts, ect will be extremely hot. Always use protective gloves and never allow others in close proximity of the grill when handling the hot parts of the grill.
- Never cook with the lid open.
- Take caution to never spill liquids into the grill when the grill is hot.
- Never leave the grill lid open and unattended while open.
- Never extinguish a fire with water. Always close the lid and your air vents to control a fire inside the unit.
- Extinguish the coals by closing both the top and bottom vents. The unit will take several hours to cool. Never cover a hot grill.

WARNING: Every part of the grill will be hot during and for a period of time after use. Use caution, keep children away from the grill, and always use gloves and protective clothing during use. Never touch the Kamado body while in use.

- TAKE EXTREME CAUTION WHEN OPENING THE GRILL LID AS HOT COALS CAN FLASH SHOULD THEY RECEIVE A RUSH OF AIR. ALWAYS ENSURE BOTH THE TOP AND BOTTOM VENTS ARE OPEN FULLY BEFORE OPENING THE GRILL LID. ALWAYS OPEN THE LID TO ROUGHLY 1-2" AND
  HOLD IT THERE FOR 5-10 SECONDS TO LET OXYGEN SLOWLY ENTER THE GRILL. THEN COMPLETELY LIFT THE LID OPEN SLOWLY. AT ALL TIMES THE USE OF LONG HEAT RESISTANT GLOVES IN NECESSARY FOR SAFETY.

Location of Grill

Most importantly, this is an outdoor grill. Ensure your grill is positioned safely away from anything that can catch fire. *Under no circumstance is this grill to be used indoors. This includes garages or any other enclosed or partially enclosed areas.*

- **Clearance from Combustibles:** Ensure your grill remains at a distance of at least 48" of the side, front, and back from combustible surfaces such as wood, gyprock, paper, plants, cloth, rubber, plastics, and fiberglass. Never install and/or use this Kamado grill on or around any combustible floor or surface at any distance. Built in applications must be installed in non-combustible materials. Do not store combustible materials, gasoline or flammable liquids or vapors around the grill. Do not use this unit under combustible surfaces. Do not use this grill under cover whether permanent or temporary structure.
- **Adequate Ventilation:** Ensure there is adequate ventilation for both the grill, grill cart and/or island cavity. This is required not only for proper combustion, but also to prevent heat buildup. An adequate flow of air into the lower front air intake is necessary for the grill's performance and could be dangerous if obstructed.
- **Firm Level Surface:** Use your grill only on a firm level surface. This grill is not designed for recreational vehicles, and should not be installed on a boat or marine craft.
- **Protection from Weather:** Keep the grill protected from adverse weather, including rain and high winds. Place the grill in an outdoor area that is protected from the wind. The exposure of the grill body to salt in the air (either along the coast or by salt water pools), pool chemicals, garden fertilizers, countertop chemicals (stone sealer) can accelerate the corrosion of the grill components. More regular cleaning of the grill and covering of the unit will be required in these settings. Never store any chemicals near your grill. Moisture allowed to enter the grill can create mold and could eventually spill out of the front air inlet taking spent ash residue with it.
- **Under covered enclosures:** Many backyards have areas that are either completely enclosed or partially closed off, such as balconies and pergolas. Do not use this grill inside a building or any other enclosed or partially enclosed area. Remember to never use this grill in an undercover enclosure. Do not use this grill under cover whether permanent or temporary structure.

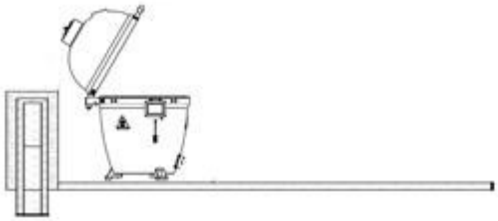

WARNING: Every part of the grill will be hot during and for a period of time after use. Use caution, keep children away from the grill, and always use gloves and protective clothing during use. Never touch the Kamado body while in use.

- TAKE EXTREME CAUTION WHEN OPENING THE GRILL LID AS HOT COALS CAN FLASH SHOULD THEY RECEIVE A RUSH OF AIR. ALWAYS ENSURE BOTH THE TOP AND BOTTOM VENTS ARE OPEN FULLY BEFORE OPENING THE GRILL LID. ALWAYS OPEN THE LID TO ROUGHLY 1-2” AND HOLD IT THERE FOR 5-10 SECONDS TO LET OXYGEN SLOWLY ENTER THE GRILL. THEN COMPLETELY LIFT THE LID OPEN SLOWLY. AT ALL TIMES THE USE OF LONG HEAT RESISTANT GLOVES IS NECESSARY FOR SAFETY.

Electrical Safety and Installation Warnings

Extension cords may be used if care is exercised in their use.

If an extension cord is used:

- The marked electrical rating of the cord set or extension cord should be at least as great as the electrical rating of the grill components. The cord should be arranged so that it will not touch hot surfaces, sharp edges or drape over the countertop or tabletop (where it can be pulled or tripped over unintentionally).

Outdoor extension cords should be used with products suited for outdoor use. They are surface marked with suffix letters "W" or "W-A" and with a tag stating "Suitable for Use with Outdoor Grills".

To protect against electrical shock, the power cord and plug should be kept dry and off of the ground.

Do not clean this product with water spray; do not spray cleaners into the lamp socket area.

Gasoline, lighter fluid or other flammable liquids and vapors should never be stored in the area of this grill or any other grill.

Before installation or service, disconnect the power supply to the work area by removing the fuse, "tripping" the circuit breaker, or unplugging the unit.

Keep any electrical supply cord and fuel supply hose away from any heated surfaces, sharp edges and dripping grease.

Be certain your grill is properly installed and grounded by a qualified technician in accordance with applicable codes. To guarantee the electrical safety of this grill, continuity must exist between the grill and an effective grounding system. It is imperative that this basic safety requirement be met. The manufacturer cannot be held responsible for damages caused by the lack of inadequacy of an effective grounding system.

Do not operate any grill with a damaged power cord or power plug, and do not operate any grill after the grill malfunctions or has been damaged in any manner. If this should occur, return the grill to the nearest authorized service facility for examination, repair or adjustment.

Be certain your grill is properly installed and grounded by a qualified technician in accordance with applicable codes. To guarantee the electrical safety of this grill, continuity must exist between the grill and an effective grounding system. It is imperative that this basic safety requirement be met. The manufacturer cannot be held responsible for damages caused by the lack of inadequacy of an effective grounding system.

This grill conforms to all uniform electrical safety codes and electrical grounding regulations. Install unit according to I.A.W. local codes or with National Electrical Code ANSI/NFPA 70 or CSA C22.1 in their absence.

UNPACKING UNIT:

Your Blaze Series Grill comes pre-assembled and requires very little setup. We do however; recommend the use of professional help during the installation of your unit as improper installation may affect your warranty. When moving or transporting your grill, NEVER do so by lifting on the hinge of the grill. Your kamado grill comes with the attached feet screwed down to the pallet. Remove screws and inner components before lifting. The lower air inlet can be used for lifting as long as gloves are used. Always use 2-3 people when moving the grill. Remove the unit from the box along with all accessories and check that no damage has occurred to the unit or any parts. Various parts of the grill are shipped with protective packaging and supports which will need to be simply unpackaged and set in place.

Your grill has an ash tray which goes in the very bottom of the grill. The charcoal grate gets installed above the ash tray. There is also a middle grate which goes between the charcoal grate and the cooking grid which is used in some cooking applications. Install this piece for the initial burn off and then as needed throughout. The cooking grids rest at the top of the kamado body and is the final item of installation.

WARNING: Every part of the grill will be hot during and for a period of time after use. Use caution, keep children away from the grill, and always use gloves and protective clothing during use. Never touch the kamado body while in use.

- TAKE EXTREME CAUTION WHEN OPENING THE GRILL LID AS HOT COALS CAN FLASH SHOULD THEY RECEIVE A RUSH OF AIR. ALWAYS ENSURE BOTH THE TOP AND BOTTOM VENTS ARE OPEN FULLY BEFORE OPENING THE GRILL LID. ALWAYS OPEN THE LID TO ROUGHLY 1-2” AND HOLD IT THERE FOR 5-10 SECONDS TO LET OXYGEN SLOWLY ENTER THE GRILL. THEN COMPLETELY LIFT THE LID OPEN SLOWLY. AT ALL TIMES THE USE OF LONG HEAT RESISTANT GLOVES IS NECESSARY FOR SAFETY.

⚠ WARNING

GRILL INSTALLATION
This grill must be installed in accordance with all local codes.
Always keep the grill in a level position at all times
This grill is for outdoor use only. Never use in an enclosed or partially enclosed environment whether permanent or temporary structure. This grill should only be used in an open air space.

Installing the Grill in a BBQ Island

NOTE: ALWAYS have equipment measured by Contractor before building.

To build in a kamado grill into an outdoor kitchen, one creates a non-combustible built in surface for the unit to sit on in the outdoor kitchen. **EVERY PART OF THE OUTDOOR KITCHEN CONSTRUCTION MUST BE MADE OF NON-COMBUSTIBLE MATERIALS. (see page 12 for examples of unapproved materials)** The height of the cooking surface, amount of extra space around the unit, finishing around the outdoor kitchen, etc. are all subject to personal preference once the unit physically has the room to fit and clearances from combustibles are met. Diagrams showing grill dimensions can be found below on pages 12-13 for planning purposes. Remember the side shelf kit is an optional accessory and typically not purchased for those building into an outdoor kitchen. The below items will also need to be reviewed when building in:

- Typically the cooking surface is positioned at or slightly higher than countertop height.
- Please adhere to all required distances to combustibles in all directions around the non-combustible island structure. Always give the minimum required distances from combustible surfaces (page 7).
- In the event non-combustible materials are used behind the grill, allow enough space for the lid to open (approximately an additional 8 inches behind the grill). A greater space behind the grill may be desirable to reduce staining of the non-combustible wall caused by the smoke exiting the grill. See grill dimensions on pages 12-13 for reference.
- **The outdoor kitchen construction must be made completely out of non-combustible materials.**
- Do not install underneath a combustible surface. This grill should only be used in an open air space.
- Check to make sure the grill is level.
- You will need a second person to help you avoid damaging the grill or your grill island
- Allow for air flow to the lower draft door. This is critical to the function of the grill.
- The motor of the optional rotis kit mounts onto the left hand outside of the grill body. Please allow enough space for this accessory if it will be used (roughly 7”). See grill dimensions on pages 12-13 for reference.

NOTE: Check with City and Fire department for Local Building Codes. A Permit may be required for Outdoor Kitchen Construction.

Minimum clearance to adjacent combustible construction at 48” from sides & 48” from back and front.

All outdoor kitchens should have ventilation throughout the island cavity to prevent a buildup of heat and safeguard any built in gas appliances. 8 inches of space is required behind the grill to allow the grill lid to open

however this dimension will not meet the minimum space necessary for distances to combustible surfaces.

Do not install underneath a combustible surface. This grill should only be used in an open air space.

ALL BBQ ISLANDS MUST BE MANUFACTURED FROM "NON-COMBUSTIBLE" MATERIALS

UNAPPROVED COMBUSTIBLE MATERIALS INCLUDE BUT NOT LIMITED TO:
WOOD, GYPROCK, PAPER, PLANTS, CLOTH, RUBBER, PLASTICS, and FIBERGLASS.
Consult your local authority having jurisdiction for further questions.

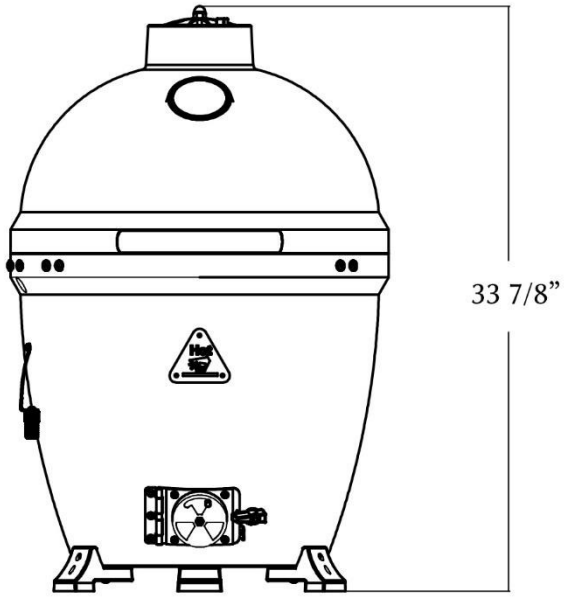

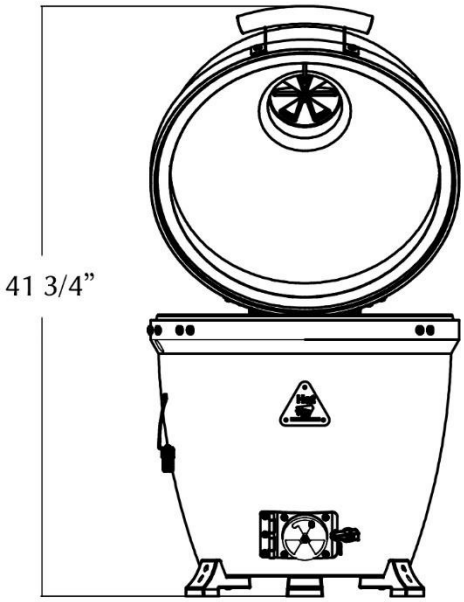

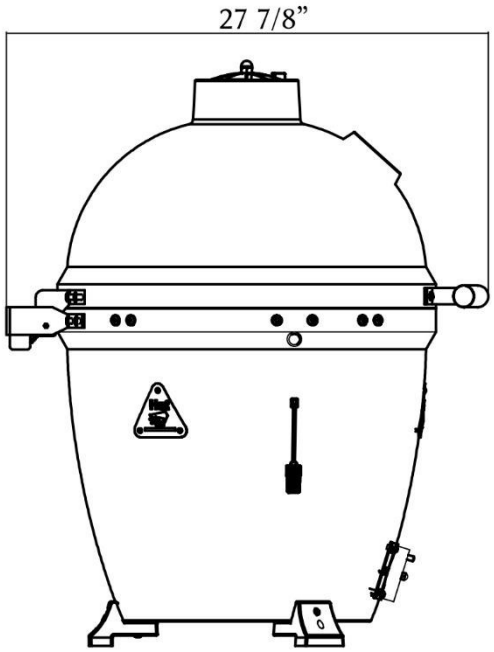
27 7/8”

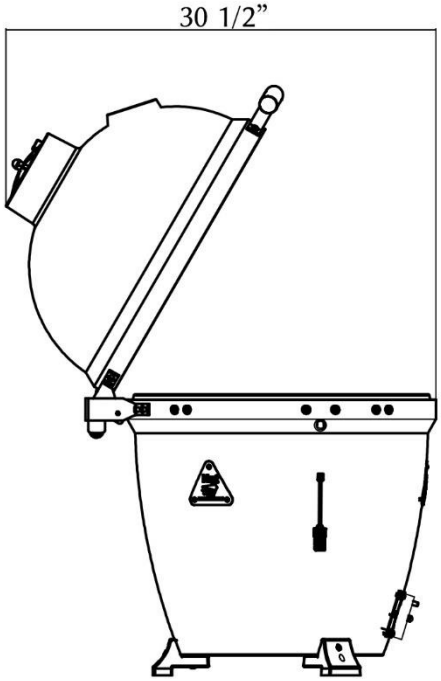
30 1/2”

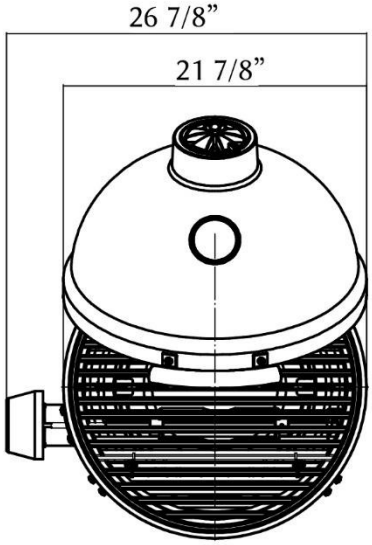

Width Including Optional Rotis Motor

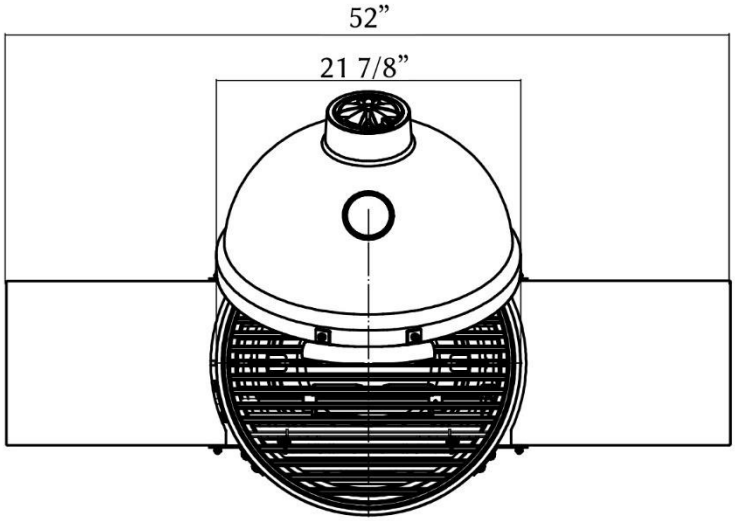

Width Including Optional Shelf Kit

BEFORE FIRST-TIME OPERATION

Caution: Never operate the grill unattended.

Prior to using your grill, verify that all of the following is correct:

- Minimum clearances are maintained.
- All packaging has been removed.
- All parts and components are properly in place and secured to the unit.
- All exterior surfaces are cleaned.
- Place the ash pan in the grill, then the charcoal grate, then the middle grate, then finally the hex shaped cooking grid.

- Always follow the safety warnings in this manual while using the grill.

- Remember when moving or transporting your grill, NEVER do so by lifting on the hinge of the grill. The lower air inlet can be used for lifting as long as gloves are used. Always use 2-3 people when moving the grill.

- Inspect the hinge upon unpacking. The fasteners could have come loose during shipping and might need to be tightened.

- It is recommend to allow the grill to burn for 30 minutes the first time without food in the grill for an initial burn off. This is

also a good time to experiment with the grill's temperature adjustment via the air vents to get the feel for how the grill will operate.

- **WARNING:** Every part of the grill will be hot during and for a period of time after use. Use caution, keep children away from the grill, and always use gloves and protective clothing during use. Never touch the Kamado body while in use.

- TAKE EXTREME CAUTION WHEN OPENING THE GRILL LID AS HOT COALS CAN FLASH SHOULD THEY RECEIVE A RUSH OF AIR. ALWAYS ENSURE BOTH THE TOP AND BOTTOM VENTS ARE OPEN
  FULLY BEFORE OPENING THE GRILL LID. ALWAYS OPEN THE LID TO ROUGHLY 1-2" AND HOLD IT THERE FOR 5-10 SECONDS TO LET OXYGEN SLOWLY ENTER THE GRILL. THEN COMPLETELY LIFT THE LID OPEN SLOWLY. AT ALL TIMES THE USE OF LONG HEAT RESISTANT GLOVES IS NECESSARY FOR SAFETY.

Using the Grill

Selecting your fuel-Hardwood Charcoal

Kamado grills perform best with the use of hardwood charcoal as the fuel. This is dissimilar to charcoal briquettes in that it is only the charred down wood without the additives found in processed charcoal briquettes. This fuel source provides the most controllable temperature settings as the burn of the hardwood charcoal is directly dependent on the oxygen you feed it. This allows the kamado grill to achieve and maintain both low and high temperatures for long periods of time. The addition of flavored woods with the hardwood charcoal is an option to impart various smoky flavors while cooking.

Selecting your fuel- Charcoal Briquettes

Although this fuel source lessens most of what folks get a kamado grill for (the control of heat and temperature), there is no danger to the product in using this fuel source. The nostalgic smell of charcoal briquettes burning or possibly the last minute lack of hardwood charcoal at the local convenience store are both possible reasons why this fuel source might come into play.

Selecting your fuel- True Hardwoods

Although this fuel source doesn't provide the same level of control of heat and temperature as hardwood charcoal, there is no danger to the product in using this fuel source. This fuel source typically requires a bed of coal or small kindling as a starter for the hardwoods. Always use seasoned/dried hardwoods as your fuel.

Selecting your fuel- Other

Other fuel options are strictly prohibited as they could damage your grill or possibly be dangerous.

Arrangement of your charcoal/fuel source:

Air flow is the largest factor and most important consideration when arranging your fuel source. Although leftover charcoal can be re-used from the previous cookout, the smaller bits and ashes should be removed as to not reduce the amount of air moving through the grill. Before adding additional fuel, stir the existing coals to force the smaller parts and ashes into the bottom of the grill. Creating an easy flow of air through the unit will prevent problems associated with a difficulty to achieve higher cooking temperatures. This is a good time to dump your ash tray. Keeping your ash tray clean is also key to keeping good air flow as a buildup of ash will prevent air flow.

When adding charcoal, avoid adding the small parts typically found in the bottom of the bag. These parts along with the bottom of the bag debris can drastically prohibit air flow and create a discharge of ash and embers from the lower air intake. It is recommended not to pour the bag out into the grill and instead scoop out the larger pieces and add into the grill. Remember always use protective gloves when adding and arranging any fuel source.

Selecting your Ignition Method

Dissimilar from other kamado grills, there is no danger of damaging your kamado using standard charcoal grill lighter fluid. Selecting your ignition method for your coals is based upon personal preference and cooking temperature. A few examples of ignition methods can be found below:

Chimney starter: (a cylinder shaped charcoal lighting accessory you fill with charcoal and use newspaper underneath to get the coals burning). A good method of getting a medium to high heat fire started. Hint: phone book paper is just as good as newspaper.

Fire starters: (small ignition sticks made of various materials that you place in the coals and ignite to get the coals burning). This method is a good one for small fires as it allows one to more easily control how much fire gets started burning.

Lighter fluid: (a liquid that gets sprayed on the coals then ignited) This is the most familiar method to individuals and can be used for large or small fires. This method is sometimes not desirable as it can impart different flavors into the food.

Hot Air/Heat Gun: (a heat source paired with a fan which you aim at particular places in your coal bed to start the fire). This is a good method for low temperature cooking and smoking

Electric starter: (typically a closed loop electric element which glows red hot and gets placed in the coals to start the fire). A good method for low to medium fires.

Regardless of the ignition method you select, **ALWAYS FOLLOW THE MANUFACTURERS INSTRUCTIONS FOR SAFE USE AND BEST PRACTICES. ALWAYS USE LONG HIGH HEAT GLOVES AND KEEP EVERYONE A SAFE DISTANCE FROM THE FIRE.**

Lighting your grill

Establishing a flow of air through the grill is critical to the ignition of the coal bed. Ensure your bottom vent is unlatched and swung into the fully open position and your lid in the open position before igniting your fuel. It will be necessary to keep the lid open during startup of your grill to allow coals to get started (approximately 10

minutes). At this point where the fuel is well lit, close your grill lid and ensure the top vent is in the full open position to establish a flow of air through the unit (see pics below).

TOP AND BOTTOM DAMPENER OPENINGS FOR LIGHTING YOUR GRILL:

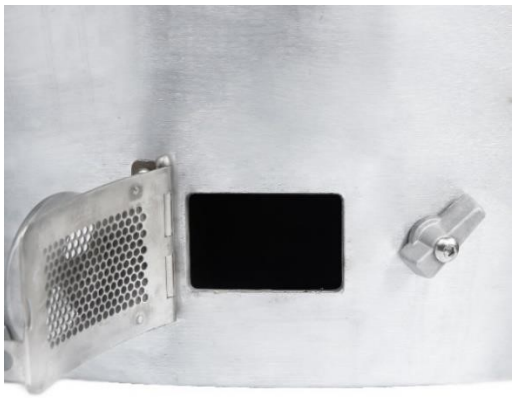

Establish your cooking temperature.

With a hot bed of fuel and both the top and bottom vent in the fully open position, the temperature in your grill will continue to rise until the air flow is reduced. As your temperature gauge rises to your desired cooking temperature, close off the air shutters to the prescribed amount (see vent images under each of the cooking configurations found below) at roughly 50-60 degrees before reaching the desired temperature range. At this point, minor air shutter adjustments may be necessary to fine tune your cooking temperature.

It is best to let the heat stabilize in your grill before opening and closing the lid or making other adjustments. Letting your grill sit at the set temperature for a period of time better protects the grill against temperature swings and allows for fine tuning adjustments to be made to achieve as true of a set temperature as possible.

Using the middle rack

Your Kamado grill comes standard with a middle rack between the charcoal tray and cooking surface. This rack can hold a drip pan to collect the drippings from your food, a pan full of liquids to add moisture to the cooking process, a pizza stone to provide an indirect heat/convection baking environment to your cooking surface, or a combination of the above. For higher temperature cooking such as searing and grilling, the use of this rack will not be used by most people. For lower temperature longer cooking such as smoking, typically the rack will be used. See more below under best practices for various cooking configurations.

Best practices for smoking/low and slow cooking:

Smoking occurs at temperatures between 225-250 degrees F and is intended on making the food taste smoky and cooking the meat at a slow speed for a longer period of time. (Brisket, port shoulder, ribs, etc.…). A smaller amount of lit coals within your coal bed and an indirect cooking method is the typical method of cooking

(see using the middle rack) The use of a pan full of liquids under the meat is often used to add moisture during the cooking process.

APPROXIMATE TOP AND BOTTOM DAMPER OPENING FOR SMOKING/LOW AND SLOW:

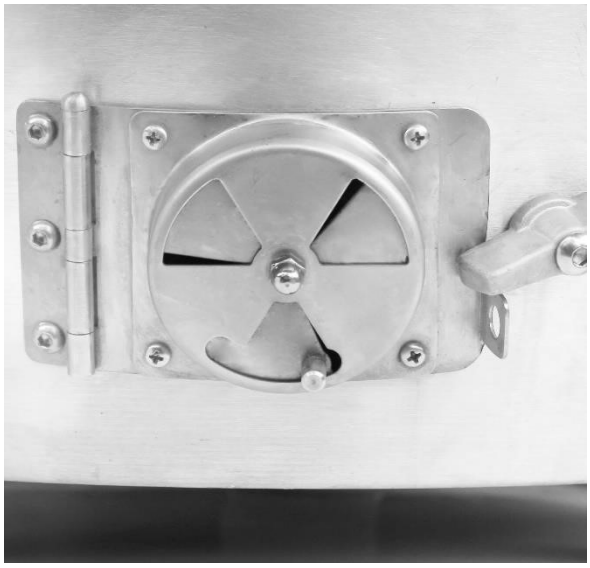

Best practices for roasting/barbequing:

Roasting/ barbequing occurs at temperatures between 325-450 degrees F and is intended giving the meat a nice crust and cooking the meat at a medium rate of speed for usually between 1-4 hours period of time. (Roasts, bone in chicken, ect…). A medium amount of lit coals and an indirect cooking method is the typical method of cooking. **Caution: At higher cooking temperatures the danger for flashback is greater than at lower temperatures. Remember the following: ALWAYS ENSURE BOTH THE TOP AND BOTTOM VENTS ARE OPEN FULLY BEFORE OPENING THE GRILL LID. ALWAYS OPEN THE LID TO ROUGHLY 1-2" AND HOLD IT THERE FOR 5-10 SECONDS TO LET OXYGEN SLOWLY ENTER THE GRILL. THEN COMPLETELY LIFT THE LID OPEN SLOWLY. AT ALL TIMES THE USE OF LONG HEAT RESISTANT GLOVES IS NECESSARY FOR SAFETY.**

APPROXIMATE TOP AND BOTTOM DAMPER OPENING FOR ROASTING/BARBEQUING AT 325:

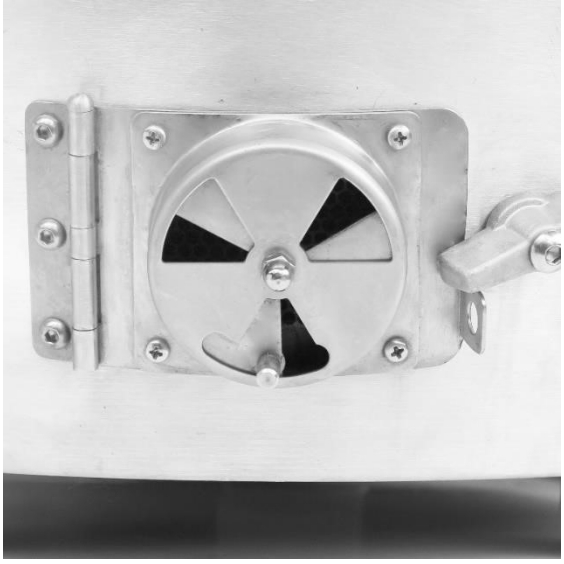

APPROXIMATE TOP AND BOTTOM DAMPER OPENING FOR ROASTING/BARBEQUING AT 450:

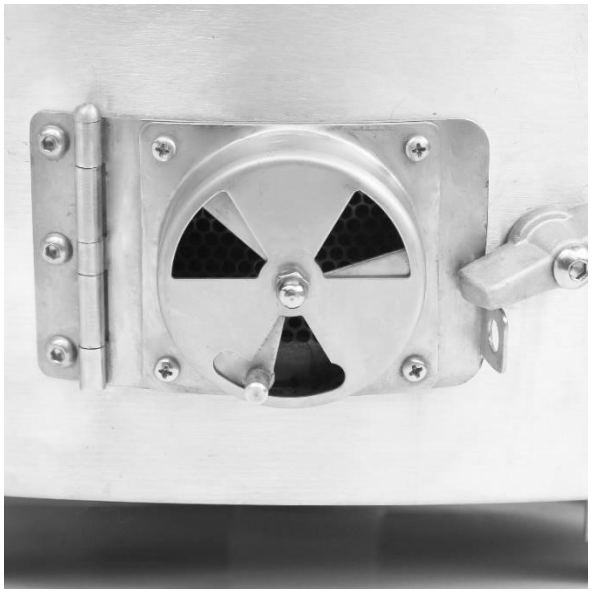

Best practices for grilling:

Grilling occurs at temperatures between 325-450 degrees F and is intended giving the meat a nice crust and cooking the meat at a faster rate of speed for a shorter period of time. (Burgers, boneless skinless chicken breasts, sausage, etc.…). A larger bed of coals and a direct cooking method is the typical method of cooking. **Caution: At higher cooking temperatures the danger for flashback is greater than at lower temperatures. Remember the following: ALWAYS ENSURE BOTH THE TOP AND BOTTOM VENTS ARE OPEN FULLY BEFORE OPENING THE GRILL LID. ALWAYS OPEN THE LID TO ROUGHLY 1-2" AND HOLD IT THERE FOR 5-10 SECONDS TO LET OXYGEN SLOWLY ENTER THE GRILL. THEN COMPLETELY LIFT THE LID OPEN SLOWLY. AT ALL TIMES THE USE OF LONG HEAT RESISTANT GLOVES IS NECESSARY FOR SAFETY.**

APPROXIMATE TOP AND BOTTOM DAMPER OPENING FOR GRILLING:

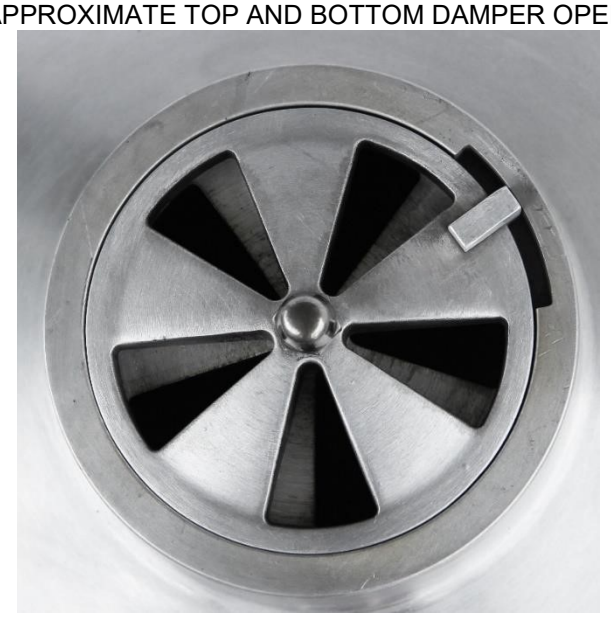

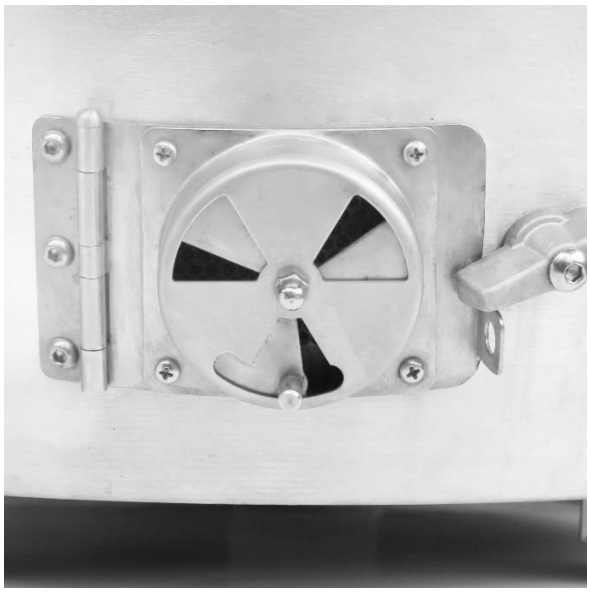

Best practices for searing:

Searing occurs at temperatures between 500-600 degrees F and is intended on providing a caramelized "seared" surface and cooking the meat in a quick fashion. (Steaks, tuna, ect…). A larger bed of coals and a direct cooking method is the typical method of cooking. **Caution: At higher cooking temperatures the danger for flashback is greater than at lower temperatures.**

Remember the following: ALWAYS ENSURE BOTH THE TOP AND BOTTOM VENTS ARE OPEN FULLY BEFORE OPENING THE GRILL LID. ALWAYS OPEN THE LID TO ROUGHLY 1-2" AND HOLD IT THERE FOR 5-10 SECONDS TO LET OXYGEN SLOWLY ENTER THE GRILL. THEN COMPLETELY LIFT THE LID OPEN SLOWLY. AT ALL TIMES THE USE OF LONG HEAT RESISTANT GLOVES IS NECESSARY FOR SAFETY.

APPROXIMATE TOP AND BOTTOM DAMPER OPENING FOR SEARING:

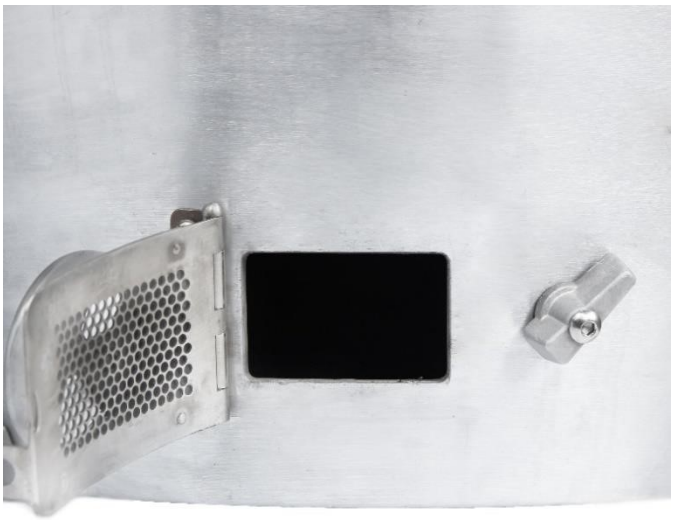

The use of smoking woods:

Smoking woods are used to impart flavor onto the food you are cooking. There are various types of woods available with various degrees of flavor. There is no right or wrong with reference to the wood selected and instead it comes down to personal preference. Hint: There is nothing wrong starting with good ole hickory. Its flavor is in-between being too mild and too harsh and is therefore a good starter wood.

Smoking woods can be purchased in either chips, chunks, or larger wood pieces like mini logs. The smaller the pieces, the faster they burn up but the easier it is to get them to burn. The larger the pieces, the longer they last but the more difficult to get them burning good. Sometimes a mix of large and small pieces is a good idea as that can yield some faster smoke from the smaller pieces but then some sustained smoke from the larger ones.

Soaking the wood chunks can enrich the smoke one receives off of the wood by creating a longer smokier burn. The wood can be place directly onto the coal bed when smoking. The hinged cooking grids can be used to add smoking chips while the grids are in place. Remember to use heat resistant gloves while working around a hot grill.

Tips and precautions while grilling:

- **WARNING:** Every part of the grill will be hot during and for a period of time after use. Use caution, keep children away from the grill, and always use gloves and protective clothing during use. Never touch the Kamado body while in use.

- Take caution when removing/handling anything that has been inside the grill. The cooking accessories, cooking grids and inner trays, optional rotisserie parts, etc. will be extremely hot. Always use protective gloves and never allow others in close proximity of the grill when handling the hot parts of the grill.

- TAKE EXTREME CAUTION WHEN OPENING THE GRILL LID AS HOT COALS CAN FLASH SHOULD THEY RECEIVE A RUSH OF AIR. ALWAYS ENSURE BOTH THE TOP AND BOTTOM VENTS ARE OPEN

FULLY BEFORE OPENING THE GRILL LID. ALWAYS OPEN THE LID TO ROUGHLY 1-2” AND HOLD IT THERE FOR 5-10 SECONDS TO LET OXYGEN SLOWLY ENTER THE GRILL. THEN COMPLETELY LIFT THE LID OPEN SLOWLY. AT ALL TIMES THE USE OF LONG HEAT RESISTANT GLOVES IS NECESSARY FOR SAFETY.

- Never leave the grill lid open while the grill is unattended.
- Take caution as to not spill liquids inside the grill while it is hot. The quick flash of steam could cause an injury.
- Never extinguish a fire with water. Always close the lid and your air vents to control a fire inside the unit.
- Always follow the instructions provided by the manufacturer of the lighter fluid or charcoal starter to ensure a safe starting of the coals.
- Always use gloves around the grill while it is in use.
- Your cooking grid is hinged on two sides and is intended to provide access through the grids to the lower parts of the grill. This gives the ability to add charcoal or wood chips while cooking. Use extreme caution as the cooking grids and entire grill will be hot during use. Always use a heat resistant tool such as a Kamado ash rake, heat resistant gloves, protective clothing, and use caution when adding charcoal and wood.
- Use extreme caution as both the top and bottom vent adjustment handles, cooking grids and racks, and entire grill will be hot during use. Always use a heat resistant tool such as Kamado ash rake, heat resistant gloves, protective clothing, and use caution when adjusting this vent.
- It is common to not see an entire bed of coals burning. When grilling over direct heat, although stirring of the coal bed is permitted, this will typically not drastically affect cooking on the unit. o To reduce the temp as fast as possible, completely close the bottom vent and top vent. After you reach the lower temp you desire, re-open the vents to the appropriate level.

WARNING: Every part of the grill will be hot during and for a period of time after use. Use caution, keep children away from the grill, and always use gloves and protective clothing during use. Never touch the Kamado body while in use.

TAKE EXTREME CAUTION WHEN OPENING THE GRILL LID AS HOT COALS CAN FLASH SHOULD THEY RECEIVE A RUSH OF AIR. ALWAYS ENSURE BOTH THE TOP AND BOTTOM VENTS ARE OPEN FULLY BEFORE OPENING THE GRILL LID. ALWAYS OPEN THE LID TO ROUGHLY 1-2” AND HOLD IT THERE FOR 5-10 SECONDS TO LET OXYGEN SLOWLY ENTER THE GRILL. THEN COMPLETELY LIFT THE LID OPEN SLOWLY. AT ALL TIMES THE USE OF LONG HEAT RESISTANT GLOVES IS NECESSARY FOR SAFETY.

Extinguish the coals by closing both the top and bottom vents. The unit will take several hours to cool. Never cover a hot grill.

Cleaning Your Grill + Grill Maintenance

NOTE: You should clean your grill after each use to maintain the overall appearance over the life of your grill. After the first use, it is normal for your grill to become discolored in certain areas from the extreme heat.

- **NEVER use oil-based cleaning products on your Kamado Grill.**

- Always wait for the grill to be completely cool before cleaning.
- Never spray any cleaner or other liquids on the grill components when they are hot.

Exterior Cleaning

When cleaning your grill, always scrub and polish in the direction of the grain. Wipe down the exterior of the grill to remove any splatter or grease. Do not use harsh abrasives. For baked on grease and or cleaning oxidation (the white splotches that develop on aluminum over time), clean with a mild to medium grit (scratch-resistant) Scotch Brite pad with a mix of vinegar and water (50/50 mix). Before covering, always allow the surface to dry. DO NOT cover a damp grill. WARNING: Do not use oven cleaner or other lye based solutions for cleaning as it can damage the aluminum surface.

Cooking Grids + Middle Grate

To clean after each use, elevate the temperature inside the grill to around 500 degrees F to char the material on the cooking grids. This allows any food particles or grease drippings to burn away. When cool, brush grids with a stainless steel brush when grill to remove any remaining charred materials. Seasoning your cooking grids with palm oil provides a non- stick surface and seals the cooking grids for a desirable finish.

Charcoal Tray

Only clean the charcoal tray when the grill and charcoal has completely cooled. Brush and allow all of the ash and small charcoal pieces to fall into the ash pan. Larger unburned pieces could be retained in the tray for the next cookout. Remember keeping air flow through the unit is critical for performance and safety.

Ash Tray

Clean the ash tray after each use. Failure to do so could result in a fire and causes excessive wear on the tray. This can also inhibit the air flow through the unit causing poor performance and potential danger. Once the grill and coals have cooled completely, remove the tray by pulling it out from the top of the grill. . Dump the ashes in a non-combustible disposal can specifically made for charcoal. This protects against the potential of a fire from coals

not fully extinguished. Use both hands and keep the tray level for safety. Clean the tray with hot soapy water, rinse thoroughly, and re-install. Using a layer of aluminum foil in the bottom of the ash tray can make clean up easier and extend the life of the tray. Always follow the rules for safely disposing of charcoal as found earlier in the book.

Inner Body

At minimum, regularly remove any spilled ashes that got past your ash tray from the bottom of the Kamado. Periodically remove any large backed on debris from the inner walls of the unit with a flat scraper and remove. The inside of your Kamado will darken after the first use and there is no need to try to clean this finish off of the grill.

Hinge mechanism, Kamado feet, lid handle, and venting handles and hardware

The hinge mechanism should be checked regularly to ensure the fasteners are secure to the grill body. Periodic lubrication of this mechanism will also smooth opening and closing of the grill over time. All hardware for the above mentioned items will need to be periodically checked for tightness ensuring they do not come loose over time.

Warranty Registration

If you have purchased a Blaze Series Grill you must register your product within 30 days of purchase to validate the warranty and maintain your original receipt to get parts for the appliance. You may register your appliance at *blazegrills.com* by selecting Support, and then selecting Register your Product. You may also fill out page 26 -2 7 and mail to the address located at the bottom of the form. The warranty is for original owners only at the original site of delivery and cannot be transferred to new owners. You must retain your sales slip or invoice. Blaze Grills are warrantied for normal single family/residential use only.

Installation, repair and maintenance work should be performed by an authorized service technician. Work by unqualified persons could be dangerous and will void the warranty. All Natural and LP Gas appliances must have a qualified installer complete the installation for the warranty to be in effect. The incorrect installation of the Blaze gas appliance will void the warranty. Please call Blaze Outdoor Products for more information on correct installation of the gas appliance.

Blaze Outdoor Products shall not be liable under this or any implied warranty for incidental or consequential damages and Blaze Outdoor Products liability is limited to the purchase price of the appliance only. This warranty gives you specific legal rights, and you may also have other rights, which may vary from state to state. This warranty is applicable in the United States and Canada only. No one else is authorized to perform any obligations under this warranty.

ATTENTION International Customers: Please consult your selling dealer or distributor for specifics pertaining to your product warranty and procedure. No one else is authorized to perform any obligations under this warranty.

Improper Maintenance, high cooking temperatures, excessive humidity, chlorine, fertilizers, lawn pesticides, chemicals, and salt can affect the Stainless Steel components and for these reasons, the warranties DO NOT COVER DISCOLORATION, SURFACE RUST, OR RUST, unless there is a loss of structural integrity / rust through of the appliance components. This warranty covers defects in material and workmanship.

WARRANTY ON PARTS :

- ★ Body – Lifetime (Parts Only)
- ★ Cooking Grids and Inner racks– Lifetime (Parts Only)
- ★ All other parts – Lifetime (Parts Only)

Consumers are responsible for all labor and shipping cost associated with warranty parts. All warranty claims are subject to manufacturer review. Please make sure to have your sales receipt information and product serial number located on the outside left side panel of the appliance. All replacement parts can be purchased through your local stocking dealer.

GRILL PARTS

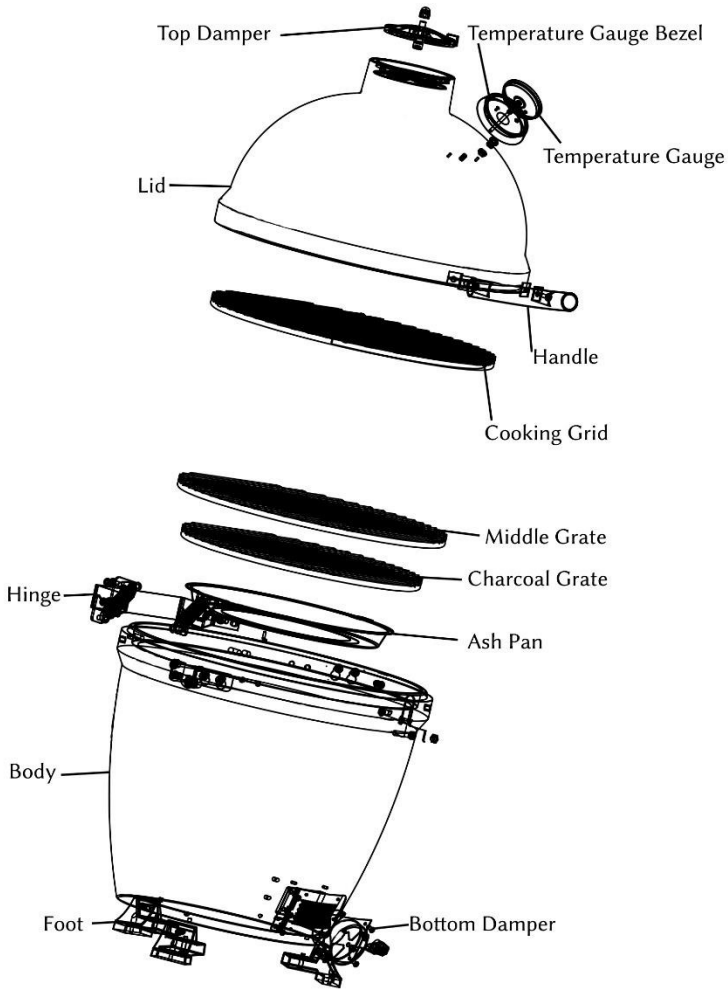

NOTE THE FOLLOWING FOR YOUR RECORDS

Grill model: _____

Date purchased: _____

Date installed: _____

Blaze dealer's name & address: _____

Blaze dealer's phone number: _____

Blaze Product Registration

Please take a minute to let us know what you bought. This makes sure we keep you up to date and have your info ready if you ever need warranty help!

Name

First _____ **Last** _____

Email _____

Phone _____

Street Address _____

Address Line 2 _____

City _____ **State / Province / Region** _____

Zip / Postal Code _____ **Country** _____

What is the model number of the Blaze product purchased?

_____

Where did you buy your Blaze product?

_____

Mail To:

Blaze Outdoor Products
Warranty Registration
6620 Greenwell Springs Rd
Baton Rouge, LA 70805