BLAZE

OUTDOOR PRODUCTS

www.blazegrills.com

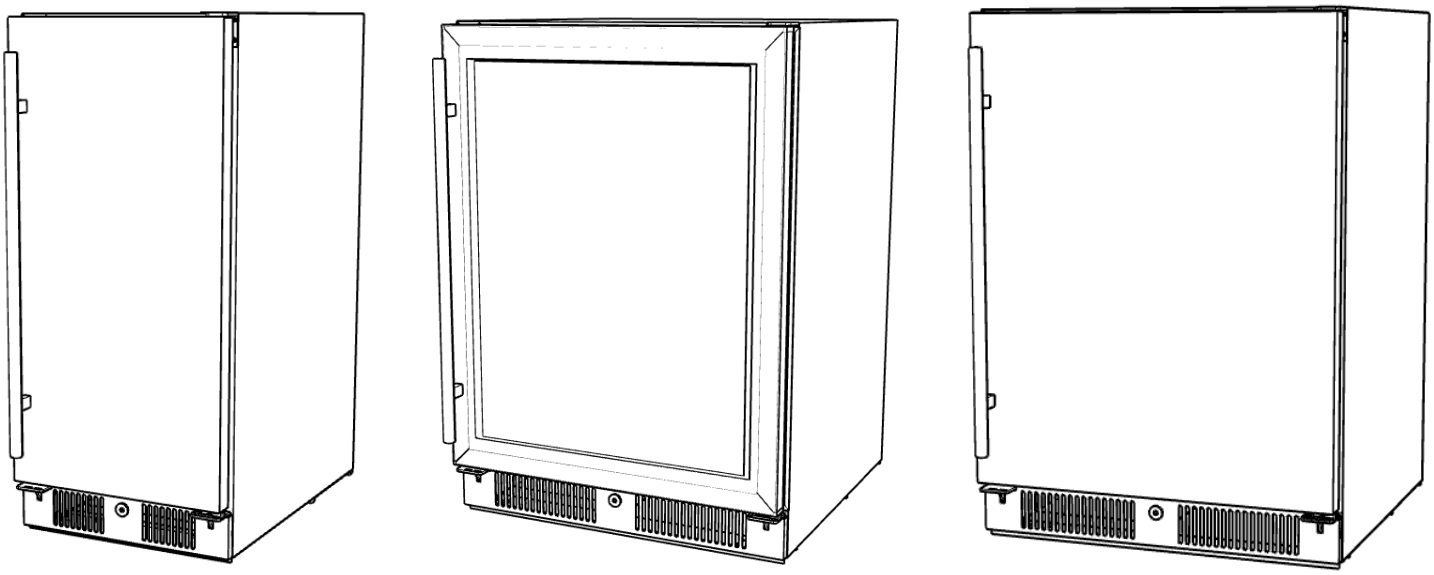

Blaze® Electric Refrigerator and Beverage Cooler

BLZSSRF-15/BLZ-GDBEV-5.5/BLZ-SSRF-5.5

BEFORE USE, PLEASE READ AND FOLLOW ALL SAFETY RULES AND OPERATING INSTRUCTIONS.

-Save these instructions-

TABLE OF CONTENTS

Parts and Features ---------- 3

Refrigerator Safety ---------- 4

Prop 65 Warning ---------- 4

Important Safety Guidelines ----------5

Warnings ---------- 5

Location and Installings ---------- 6

Leg Adjustments ---------- 7

Operating Instructions ---------- 7-10

Control Instructions ----------7-8

Lighting ----------9

Sabbath Mode ---------- 9

Memory Functions ---------- 9

Alarms ---------- 9

Notes ---------- 10

Shelf Removal ---------- 10

Door Reversal ---------- 11 -12

Built-in Instructions ---------- 13

Care and Maintenance ---------- 14

Troubleshooting ---------- 15

Warranty Information ---------- 16

-Save these instructions-

PARTS & FEATURE

MODEL #
BLZ-SSRF-5.5 - Solid Door Model

MODEL #
BLZ-GDBEV-5.5 - Outdoor Glass Model

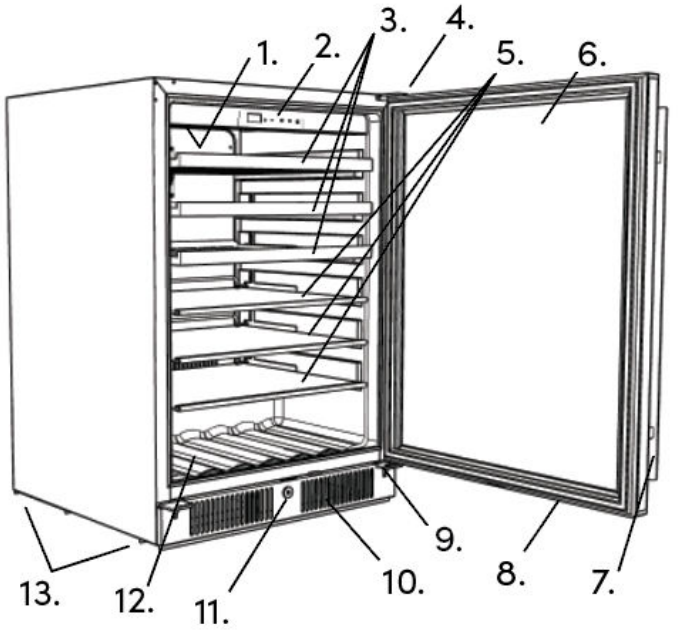

Number	Part Name
1.	Interior Light Cover (behind control panel)
2.	Control Panel
3.	Wood Shelves (3)
4.	Top Hinge
5.	Glass Shelf (3)
6.	Door
7.	Door handle
8.	Door Gasket
9.	Bottom Hinge
10.	Front vents
11.	Door Lock
12.	Can or Bottle Storage
13.	Leveling Leg

*** Note - model BLZ-GDBEV-5.5 has three glass shelves

MODEL #
BLZ-SSRF-15 - Solid Door Model

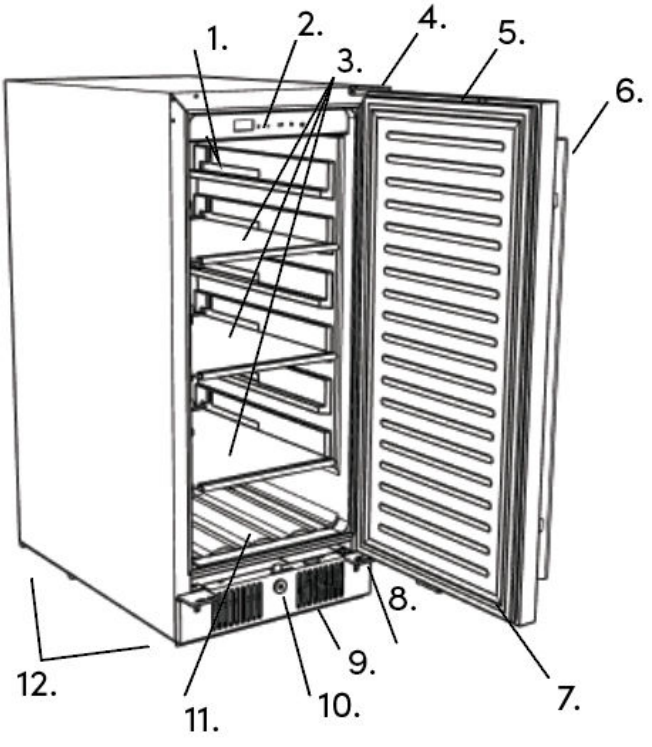

Number	Part Name
1.	Interior Light Cover (behind control panel)
2.	Control Panel
3.	Glass Shelves (3)
4.	Top Hinge
5.	Door
6.	Door handle
7.	Door Gasket
8.	Bottom Hinge
9.	Front vents
10.	Door Lock
11.	Can or Bottle Storage
12.	Leveling Leg

REFRIGERATOR SAFETY

Your safety and the safety of others are very important.

We have provided many important safety messages in this manual for your appliance. Always read and obey all safety messages.

This is the Safety Alert Symbol. This symbol alerts you to potential hazards that can kill or injure you and others. All safety messages will follow the Safety Alert Symbol and either the words " DANGER", "WARNING" or "CAUTION".

DANGER

Danger means that failure to heed this safety statement may result in severe personal injury or death.

WARNING

Warning means that failure to heed this safety statement may result in extensive product damage, serious personal injury, or death.

CAUTION

Caution means that failure to heed this safety statement may result in minor or moderate personal injury, property or equipment damage.

All safety messages are for your safety or to alert you to potential hazards, tell you how to reduce the chance of injury, and let you know what can happen if the instructions are not followed.

Prop. 65 Warning for California Residents

WARNING: This product can expose you to chemicals including [Lead], which is known to the State of California to cause cancer, and [Bisphenol A], which is known to the State of California to cause birth defects or other reproductive harm. For more information go to www.P65Warnings.ca.gov.

IMPORTANT SAFETY GUIDELINES

Before the refrigerator is used, it must be properly positioned and installed as described in this manual, so read the manual carefully. To reduce the risk of fire, electrical shock or injury when using the refrigerator, follow these basic precautions, including the following:

DANGER

- Plug into a grounded 3-prong outlet, do not remove grounding prong, do not use an adapter, and do not use an extension cord. If the SUPPLY CORD is damaged, it must be replaced by the manufacturer, its service agent or similarly qualified persons in order to avoid a hazard.
- It is recommended that a separate circuit, serving only your refrigerator be provided. Use receptacles that cannot be turned off by a switch or pull chain.
- Never clean refrigerator parts with flammable fluids. These fumes can create a fire hazard or explosion. And do not store or use gasoline or other flammable vapors and liquids in the vicinity of this or any other appliance. The fumes can create a fire hazard or explosion.
- Before proceeding with cleaning and maintenance operations, make sure the power line of the unit is disconnected.
- Do not connect or disconnect the electric plug when your hands are wet.
- Unplug the refrigerator or disconnect power before cleaning or servicing. Failure to do so can result in electrical shock or death.
- Do not attempt to repair or replace any part of your refrigerator unless it is specifically recommended in this manual. All other servicing should be referred to a qualified technician. Consult repair manual or owner's guide before attempting to service this product. All safety precautions must be followed.
- DANGER: Risk of child entrapment. Before you throw away your old refrigerator or freezer:
  * Take off the doors.
  * Leave the shelves in place so that children may not easily climb inside.

WARNING

- Use two or more people to move and install refrigerator. Failure to do so can result in back or other injury.
- The refrigerator must be installed with all electrical, water and drain connections in accordance with state and local codes. A standard electrical supply (115 V AC only, 60 Hz), properly grounded in accordance with the National Electrical Code and local codes and ordinances is required.
- Do not kink or pinch the power supply cord of refrigerator.
- The fuse (or circuit breaker) size should be 15 amps.
- It is important for the refrigerator to be leveled in order to work properly. You may need to make several adjustments to level it.
- All installation must be in accordance with local plumbing code requirements.
- Make certain that the lines are not pinched, kinked or damaged during installations.
- Check for leaks after connection.
- Never allow children to operate, play with or crawl inside the refrigerator.
- Do not use solvent-based cleaning agents of abrasives on the interior. These cleaners may damage or discolor the interior.
- Do not use this apparatus for other than its intended purpose.
- To ensure proper ventilation for your refrigerator, the front of the unit must be completely unobstructed. Choose a well-ventilated area with temperatures above 60°F (16°C) and below 90°F (32°C). This unit must be installed in an area protected from the element, such as wind, rain, water spray or drips.

Location and Installing Your appliance

The appliance should be installed in accordance with local electrical code requirements. It should also be placed in a location that is strong enough to support its total weight, keeping in mind that it will weigh substantially more when fully loaded than when empty.

Before you plug the appliance into a power supply, be sure to let it stand upright for at least 24 hours to allow the compressor's oils to settle.

WARNING: Use two or more people to move and install the appliance. Failure to do so can result in back or other injury. Carefully remove the packaging materials. Remove any shipping tape and glue from your appliance before using. Do not use sharp instruments, rubbing alcohol, flammable fluids, or abrasive cleaners to remove tape or glue. These products can damage the surface of your appliance.

• Remove interior and exterior packaging prior to installation. Wipe the outside of the appliance with a soft, dry cloth and the inside with a lukewarm wet cloth.
• Place the appliance on a floor that is strong enough to support it when it is fully loaded.
• Do not place the appliance in direct sunlight or near sources of heat, such as a stove or heater, as this can increase electrical consumption. Extreme cold ambient temperatures may also cause the appliance to perform improperly.
• Do not use the appliance near water, for example in a wet basement or near a sink.
• ***Before connecting the appliance to a power source, let it stand upright for approximately 24 hours. This will reduce the possibility of a malfunction in the cooling system from handling during transportation.***

Cabinet Leg Adjustment

There is an adjustable leg on the bottom of the appliance that can be turned up or down to ensure that the appliance is level. It is important that the appliance is level to minimize noise and vibration. To level the appliance:

1. Move the appliance to its final location.
2. Turn the leveling leg counter - (clockwise) until it is touching the bottom of the chassis.
3. Once in place - slowly turn the leveling leg counterclockwise until the appliance is level.

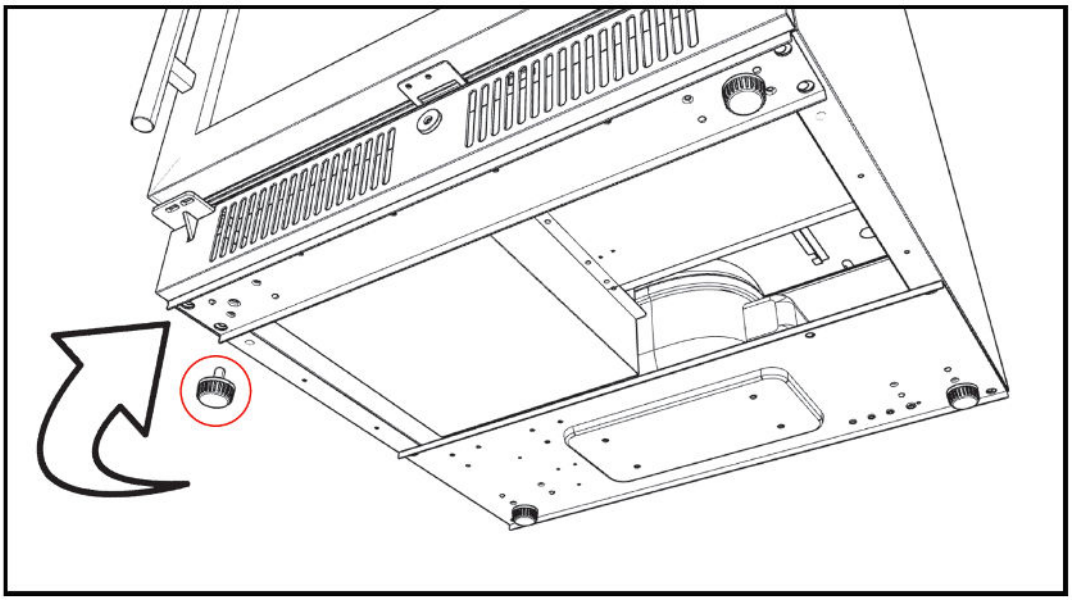

OPERATING YOUR COOLER
AND SETTING THE TEMPERATURE CONTROL

(A) Control System Instructions

BLZ-SSRF-5.5/BLZ-SSRF-15 Solid Door

The temperature setting can be adjusted from 34°F to 68°F

" ⏻ " *Power Button*

(1) To turn the unit ON and OFF, press and hold this button for approximately 3 seconds.

" " Sabbath mode Button

(2) This refrigerator is programmed with a Sabbath Mode. In Sabbath Mode, the refrigerator will continue to cool and maintain temperature. However, the refrigerator will no longer respond to user interactions. All lights, display(s), and indicators are turned off, and all alarms are disabled.

"°C/°F" *Button*

(3) Press this button to toggle between controls in degrees Fahrenheit or degrees Celsius.

" + " *Button*

(4) Press this button to increase the temperature by one (1) degree increments.

" — " *Button*

(5) Press this button to decrease the temperature by one (1) degree increments.

" 72 " *LED display*

(6) Shows the set temperature of the cabinet.

OPERATING YOUR COOLER
AND SETTING THE TEMPERATURE CONTROL CONT'

BLZ-GDBEV-5.5 Glass Door

The temperature setting can be adjusted from 34°F to 68°F

" ⏻ " Power Button

(1) To turn the unit ON and OFF, press and hold this button for approximately 3 seconds.

" " Sabbath mode Button

(2) This refrigerator is programmed with a Sabbath Mode. In Sabbath Mode, the refrigerator will continue to cool and maintain temperature. However, the refrigerator will no longer respond to user interactions. All lights, display(s), and indicators are turned off, and all alarms are disabled.

" " interior light

(3) Press this button to Control the interior light ON/OFF.

"°C/°F" Button

(4) Press this button to toggle between controls in degrees Fahrenheit or degrees Celsius.

" + " Button

(5) Press this button to increase the temperature by one (1) degree increments.

" — " Button

(6) Press this button to decrease the temperature by one (1) degree increments.

" 72 " LED display

(7) Shows the set temperature of the cabinet.

OPERATING YOUR COOLER
AND SETTING THE TEMPERATURE CONTROL CONT'

(B) Internal Lights

Two different modes: Display mode and Automatic Mode.

(1) Display Mode:

The internal lights will stay constantly illuminated whether the door is open or closed.

"Display Mode is a custom/user-defined function, not a regular daily function."

(2) Automatic Mode:

The internal lights will illuminate each time the door is opened and fade off once the door is closed. This feature is triggered by a sensor located on the front vent, this sensor allows the refrigerator to recognize when the door is open or closed.

The default mode is Automatic Mode. To change between modes, press and hold the Interior Lights button for 3 seconds.

(C) Sabbath Mode

Sabbath mode disables system responses to user-initiated activities and all external functions, including lighting, display and audible alarms. The unit will still maintain internal temperatures and set points.

Although the display will not be visible, the temperature settings will remain active and preserve the internal temperature. Sabbath mode will remain active until it is disabled by the user.

To enable or disable Sabbath mode, Press the Power Button and simultaneously press the Increase Temperature Button twice. The interior light and control display will go dark until the user disables Sabbath mode.

(D) Functions

Temperature Memory Function

If the power is suddenly lost, the set temperature will be saved by the unit. Once the power is back on, the unit will be at the same set temperature.

(E) Door Ajar Alarm

Your unit is equipped with an audible alarm to alert you when the door has been left open.

If at any time the door has been left open for more than 3 minutes at a time, the alarm will sound and then will continue to sound until the door is closed completely or the unit is powered off.

OPERATING YOUR COOLER
AND SETTING THE TEMPERATURE CONTROL CONT'

(F) Other Notes

- If the unit is unplugged, power lost, or turned off, you must wait 3 to 5 minutes before restarting the unit. ***If you attempt to restart before this time delay, the unit will not start.***
- When you use the unit for the first time or restart the unit after having been shut off for a long time, there could be a few degrees variance between the temperature you select and the one indicated on the LED readout. This is normal and it is due to the length of the activation time. Once the unit is running for a few hours it will automatically adjust.

(G) How to Remove the Shelves

1.Open the door completely.

2.Make sure the shelf is pushed back completely.

3.Lift either the left or right side of the shelf creating a 45◦ angle from its original position.

Make sure not to lift either side of the shelf too fast as it may come in contact with the inner wall mount.

4.Pull the shelf outward until it is removed from the inner compartment. You may encounter some resistance from the shelf guard rail.

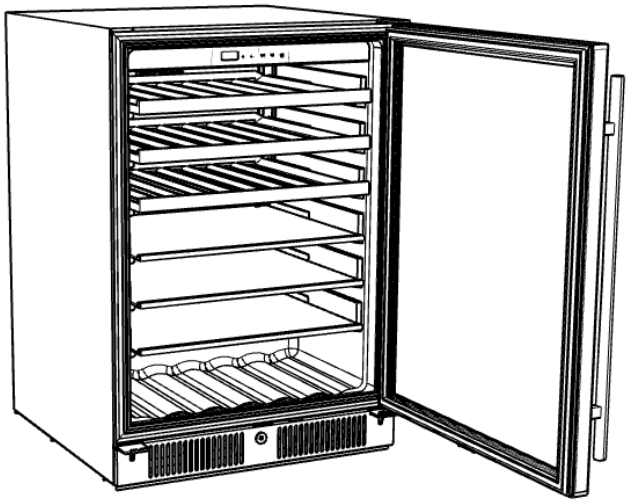

Fully open door

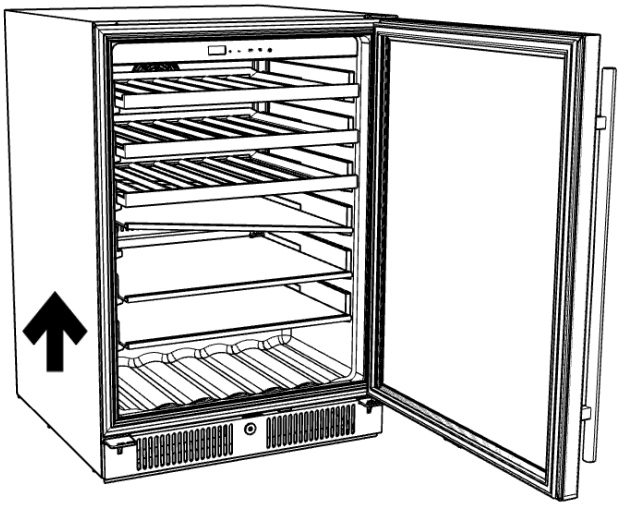

Rotate shelf 45 degs

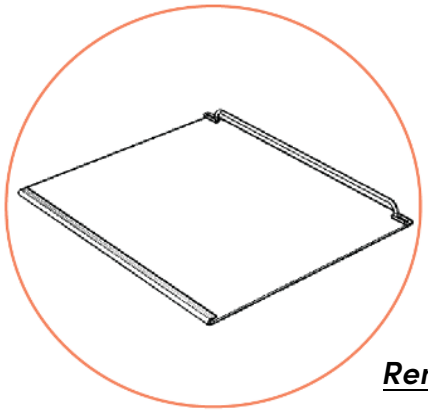

Removed shelf

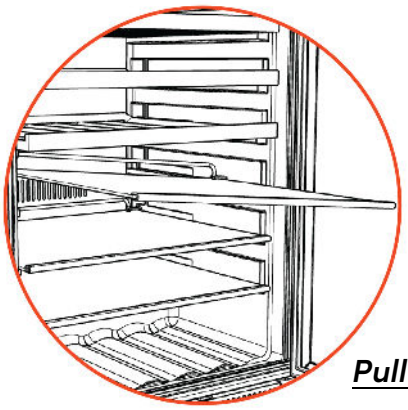

Pull the shelf

OPERATING YOUR COOLER AND SETTING THE TEMPERATURE CONTROL CONT'

(H) Reversing the Door Swing of Your Appliance

This refrigerator can be opened either from the left or right side. The default way of opening the door is from the right side. If you want to open the door from the left side, please follow the instructions below.

NOTE: All the removed parts must be well kept for the reinstallation of the door

Step 1 - Open Door

Step 2 - Take out the 2 screws (1) from the lower door axis (2),remove the door (3), and the axis plate (2) from the door.

Step 3 - Take out the 3 hinge screws from the top right hinge (4) and remove it.

Step 4 - Unscrew 2 screws and remove the door switch bracket (5), unscrew 2 screws and remove the child safety lock hook (6), unscrew 2 screws and remove the door stopper (7), remove the silver sticker (8) on the right corner of the door, remove 2 decorative nails (9) on the top of the door, remove and discard the logo (10).

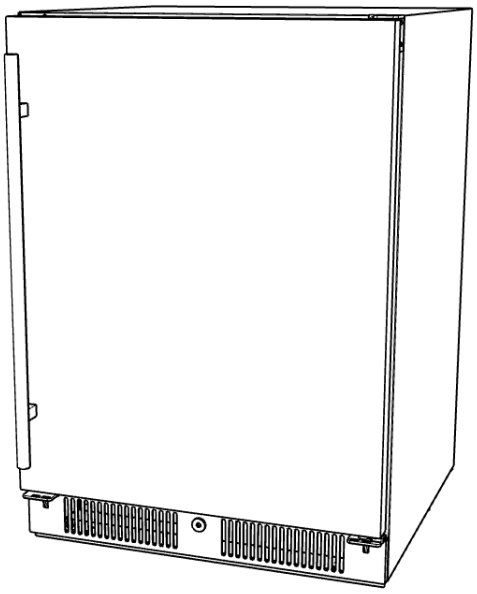

Step 1 (Normal position)

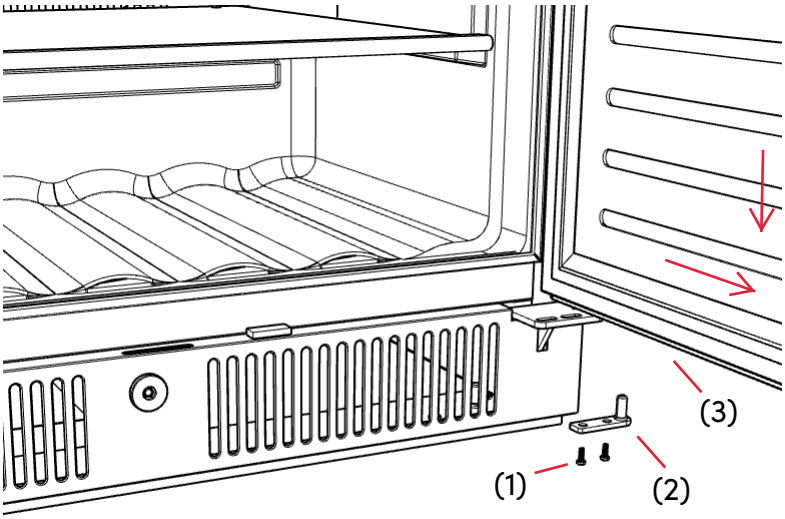

Step 2 (Exploded View)

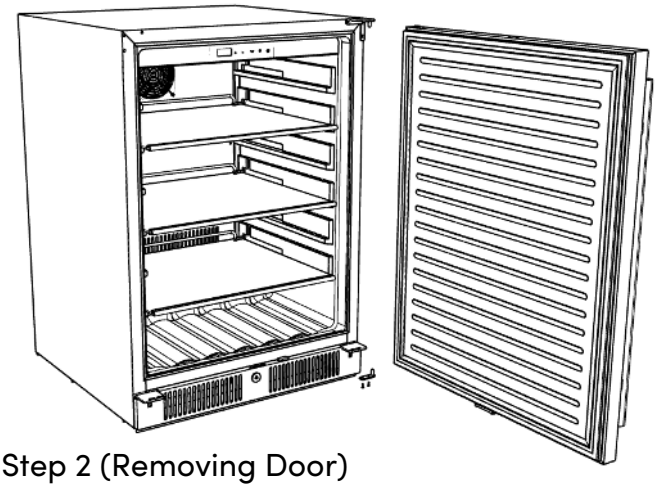

Step 2 (Removing Door)

Step 3 (Removing Hinge)

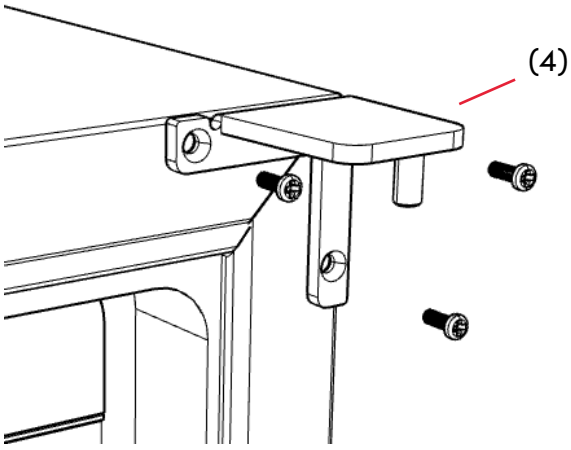

(H) Reversing the Door Swing of Your Appliance cont'

Step 5 - ***install the door switch bracket, child safety lock, and door stopper on the opposite side of the door.***

Step 6 - Rotate the door 180 degrees.

Step 7 - Remove the 3 decorative nails (11) from the top left of the cabinet. Install the decorative nails to the top right of the cabinet and install the new top hinge (12) from the hardware package included in the installation manual at the top left of the cabinet with 3 screws.

Step 8 - Install the lower door axis (2) and install the door (3) once correctly aligned.

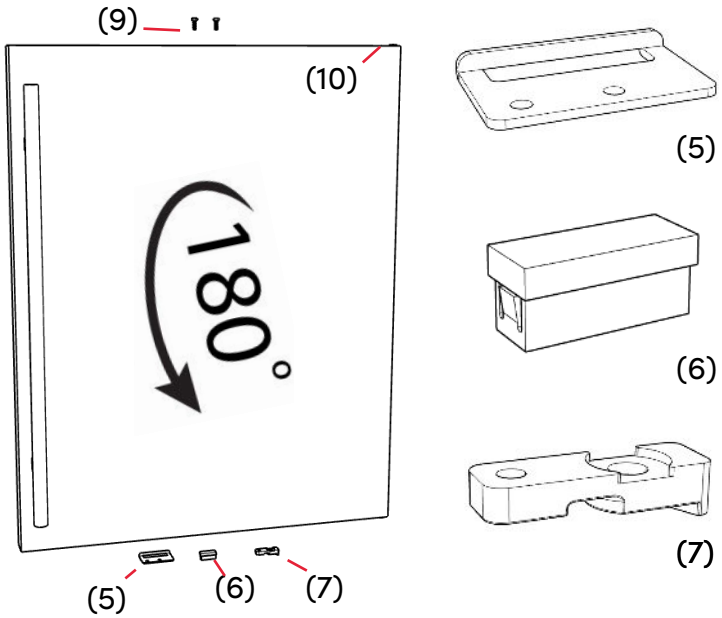

Step 4, 5 and 6 (Door direction)

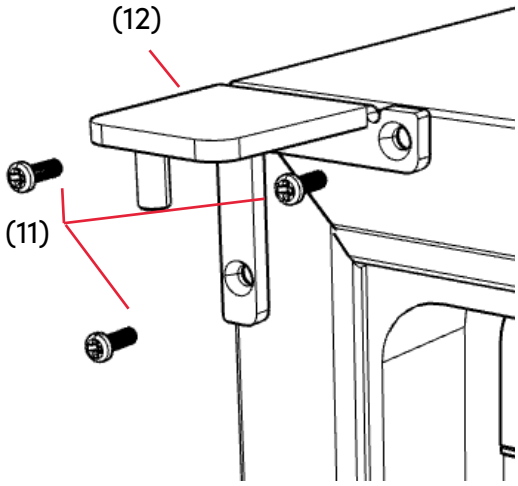

Step 7 (Door components)

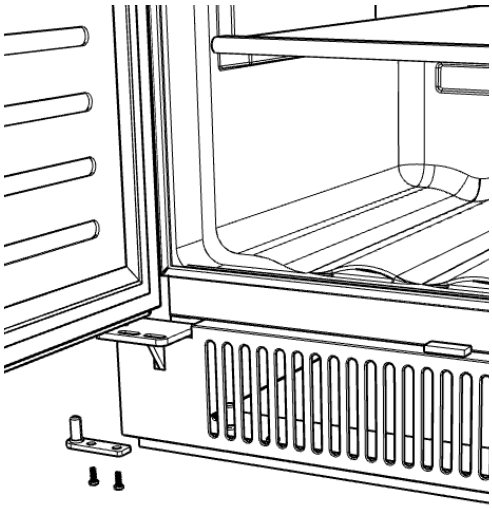

Step 8 (Install Door Axis)

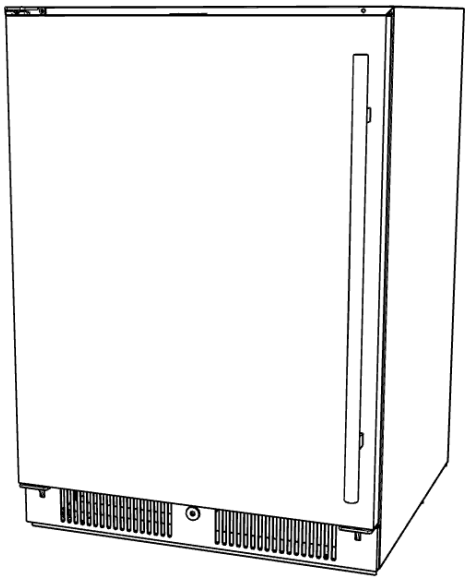

Step 9 (Install complete)

BUILT-IN INSTALLATION

ATTENTION:

This unit has been designed for freestanding or built-under installation. In every case, there must be adequate ventilation and access for service.

FREESTANDING INSTALLATION:

Freestanding installation will allow you to install the unit in almost any indoor/outdoor place you desired. You must follow the stated instructions for electrical requirements , recommended install area and leveling of this unit.

BUILT-UNDER INSTALLATION

When installing this unit under a counter, follow the recommended spacing dimensions shown . Always keep any ventilation openings clear of obstruction.

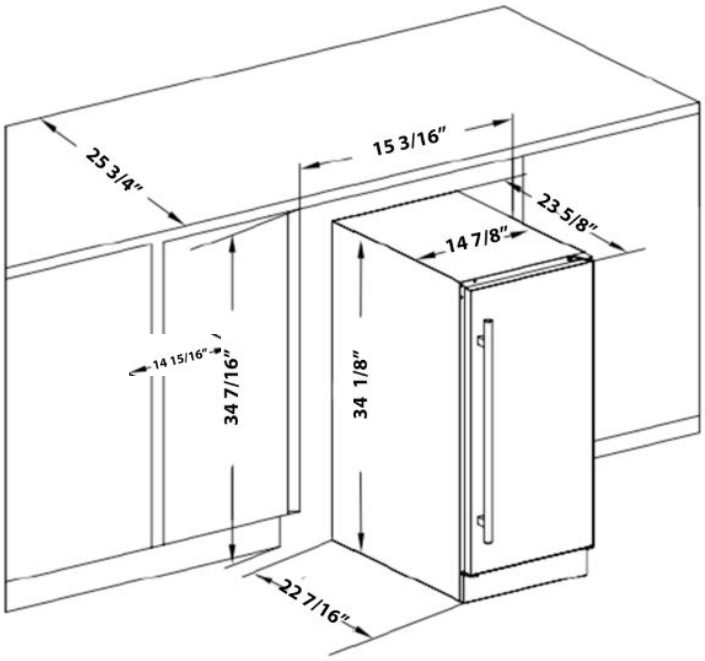

BLZ-SSRF-15

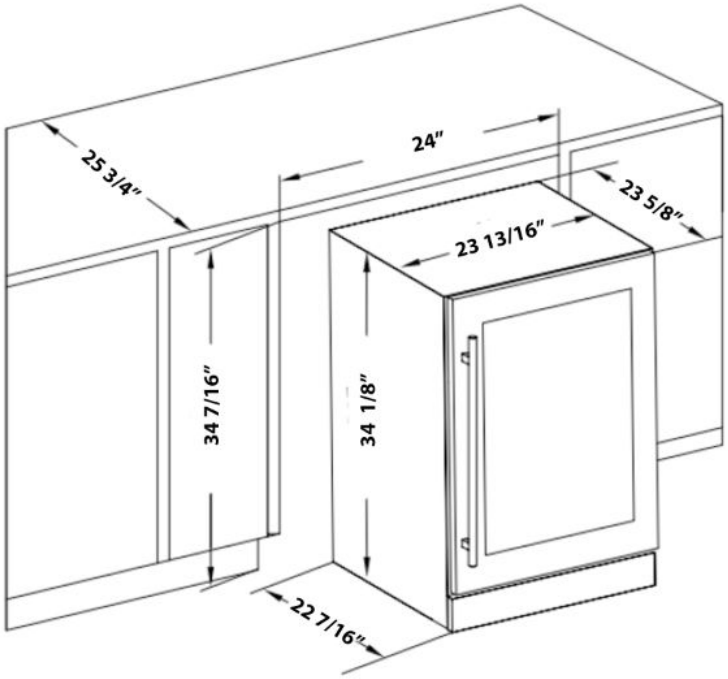

BLZ-SSRF-5.5/BLZ-GDBEV-5.5

CARE AND MAINTENANCE

GENERAL CLEANING

Ensure the appliance is unplugged before cleaning.

• To clean the inside of the appliance, use a soft cloth and a solution of a tablespoon of baking soda to one quart of water or a mild soap solution or some mild detergent.
• Wash removable shelves in a mild detergent solution, then dry and wipe with a soft cloth.
• Clean the outside with a soft, damp cloth and some mild detergent.
• It is important to keep the area clean where the door seals against the cabinet. Clean this area with a soapy cloth. Rinse with a damp cloth and let dry.
Note: Do not use cleaners containing ammonia or alcohol on the appliance. Ammonia or alcohol can damage the appearance of the appliance. Never use any commercial or abrasive cleaners or sharp objects on any part of the appliance.

(1) POWER FAILURE

Most power failures are corrected within a few hours and should not affect the temperature of your appliance if you minimize the number of times the door is opened. If the power is going to be off for a longer period of time, take the proper steps to protect your contents.
Note: Wait 3 to 5 minutes before attempting to restart the appliance if operation has been interrupted.

(2) DEFROST

This unit is equipped with an automatic defrost function and does not require manual defrosting. Defrost water from the appliance is channeled into a drip tray located above the compressor. Heat transfer from the compressor causes the defrost water to evaporate.

(3) VACATION

• Short vacations: Leave the appliance operating during vacations of less than three weeks.
• Long vacations: If the appliance will not be used for several months, remove all items and turn off the appliance. Clean and dry the interior thoroughly. To prevent odor and mold growth, leave the door open slightly, blocking it open if necessary.
• Make sure the appliance is empty.
• Secure the shelves with tape.
• Secure the door with tape.
• Turn the adjustable foot up to the base to avoid damage.
• Protect the outside of the appliance with a blanket or similar item.
• Be sure the appliance stays in the upright position during transportation.
• If the appliance is placed on its back or side
during transportation, upon reaching the destination, allow it to remain upright for 6 hours before plugging in to avoid damage to internal components.

(4) DISPOSAL

This appliance may not be treated as regular household waste, it should be taken to the appropriate waste collection point for recycling of electrical components. For information on local waste collection points, contact your local waste
removal agency or government office.
Risk Of Fire Or Explosion. Dispose Of Properly In Accordance With The Applicable Federal Or Local Regulations. FLAMMABLE REFRIGERANT Used.

TROUBLESHOOTING GUIDE

You can solve many common appliance problems easily, saving you the cost of a possible service call. Try the suggestions below to see if you can solve the problem before calling the servicer.

Problem	Possible cause
Appliance does not operate.	Not plugged in. The appliance is turned off. Tripped circuit breaker or blown fuse.
Appliance is not cold enough.	Check the temperature control setting. External environment may require a higher setting. The door is opened too often. The door is not closed completely. The door gasket does not seal properly.
Turns on and off frequently.	The room temperature is higher than normal. A large amount of contents has been added to the appliance. The door is opened too often. The door is not closed completely. The temperature control is not set correctly. The door gasket does not seal properly.
The light does not work.	Not plugged in. Tripped circuit breaker or blown fuse. The bulb has burned out.
Vibrations.	Check to be sure the appliance is level.
The appliance seems to make too much noise.	The rattling noise may come from the flow of the refrigerant, which is normal. As each cycle ends, you may hear gurgling sounds caused by the flow of refrigerant in your appliance. Contraction and expansion of the inside walls may cause popping and crackling noises. The appliance is not level.
The door will not close properly.	The appliance is not level. The door was reversed and not properly re-installed. The gasket is dirty. The shelves are out of position.

LIMITED WARRANTY

Manufacturer warrants to the original purchaser at the original site of delivery with proof of purchase of each Refrigerator that when subject to normal residential use, it is free from defects in workmanship and material for the periods specified below. This warranty excludes refrigerators used in rental or commercial applications. It does not cover labor or labor related charges. There will be shipping and handling charge for the delivery of the warranty part(s).

1 Year Warranty

Our obligation under this warranty is limited to repair or replacement, at our option, of the product during the warranty period. The extent of any liability of Manufacturer, under this warranty is limited to repair or replacement. This warranty does not cover normal wear of parts, damage resulting from any of the following: negligent use or misuse of the product, use contrary to operating instructions, or alteration by any person other than our factory service center. The warranty period is not extended by such repair or replacement.

Warranty claim procedure: If you require parts for your refrigerator, please contact your dealer for assistance. Our hours of operation are 8 AM to 5 PM CST. Our phone number is 866-976-9510. Please direct all correspondence to: BLAZE OUTDOOR PRODUCTS, 6620 Greenwell Springs Rd, Baton Rouge, LA 70805. ATTN: Warranty Service Center

ATTENTION International Customers: Please consult your selling dealer or distributor for specifics pertaining to your product warranty and procedure.

Product repair as provided under this warranty is your exclusive remedy. Manufacturer shall not be liable for any incidental or consequential damages for breach of any express or implied warranty on its products. Except to the extent prohibited by applicable law, any implied warranty or merchantability or fitness for a particular purpose on this product for the duration of the above warranty. Some states do not allow the exclusion or limitation of incidental or consequential damages, or allow limitations on how long an implied warranty lasts, so the above limitations or exclusions may not apply to you. This warranty gives you specific legal rights, and you may have other rights, which vary from state to state.